Federal Energy Regulatory Commission

Office of
Energy Projects

August 2016

Tennessee Gas Pipeline Company, L.L.C. Docket No. CP16-4-000

Orion Project

Environmental Assessment

Cooperating Agency:

US Army Corps of Engineers

Washington, DC 20426

FEDERAL ENERGY REGULATORY COMMISSION
WASHINGTON, D.C. 20426

OFFICE OF ENERGY PROJECTS

In Reply Refer To:
OEP/DG2E/Gas 4
Tennessee Gas Pipeline Company, L.L.C.
Orion Project
Docket No. CP16-4-000

TO THE PARTY ADDRESSED:

The staff of the Federal Energy Regulatory Commission (FERC or Commission) has prepared this environmental assessment (EA) for the Orion Project (Project) proposed by Tennessee Gas Pipeline Company, L.L.C. (TGP) in the above-referenced docket. TGP requests authorization to construct pipeline facilities in Pennsylvania to increase natural gas delivery capacity in the region by approximately 135,000 dekatherms per day.

The EA assesses the potential environmental effects of the construction and operation of the Project in accordance with the requirements of the National Environmental Policy Act of 1969 (NEPA). The FERC staff concludes that approval of the Project, with appropriate mitigating measures, would not constitute a major federal action significantly affecting the quality of the human environment.

The U.S. Army Corps of Engineers participated as a cooperating agency in the preparation of the EA. Cooperating agencies have jurisdiction by law or special expertise with respect to resources potentially affected by the proposal and participate in the NEPA analysis.

TGP's Project involves construction of approximately 12.9 miles of 36-inch-diameter looping[1] pipeline in two segments; a new pig[2] launcher and connecting facilities at the beginning of the proposed pipeline loop; and a new pig receiver, a new odorant facility, and additional modifications at TGP's existing Compressor Station 323.

---

[1] A loop is a segment of pipe that is usually installed adjacent to an existing pipeline and connected to it at both ends. The loop allows more gas to be moved through the system.

[2] A "pig" is a tool that the pipeline company inserts into and pushes through the pipeline for cleaning the pipeline, conducting internal inspections, or other purposes.

The FERC staff mailed copies of the EA to federal, state, and local government representatives and agencies; elected officials; environmental and public interest groups; Native American tribes; potentially affected landowners and other interested individuals and groups; and newspapers and libraries in the Project area. In addition, the EA has been placed in the public files of FERC and is available for viewing on FERC's website at www.ferc.gov using the eLibrary link. A limited number of copies of the EA are available for distribution and public inspection at:

Federal Energy Regulatory Commission
Public Reference Room
888 First Street NE, Room 2A
Washington, DC 20426
(202) 502-8371

Any person wishing to comment on the EA can do so. Your comments should focus on the potential environmental effects, reasonable alternatives, and measures to lessen or avoid environmental impacts. The more specific your comments, the more useful they will be. To ensure that the Commission has the opportunity to consider your comments prior to making its decision on this Project, it is important that we receive your comments in Washington, DC on or before **September 22, 2016**.

For your convenience, there are three methods you can use to file your comments with the Commission. In all instances, please reference the Project docket number (CP16-4-000) with your submission. The Commission encourages electronic filing of comments and has expert staff available to assist you at 202-502-8258 or efiling@ferc.gov.

(1) You can file your comments electronically by using the eComment feature, which is on the Commission's website (www.ferc.gov) under the link to Documents and Filings. This is an easy method for submitting brief, text-only comments on a project;

(2) You can file your comments electronically by using the eFiling feature on the Commission's website (www.ferc.gov) under the link to Documents and Filings. With eFiling, you can provide comments in a variety of formats by attaching them as a file with your submission. New eFiling users must first create an account by clicking on "eRegister." You will be asked to select the type of filing you are making. A comment on a particular project is considered a "Comment on a Filing"; or

(3) You can file a paper copy of your comments at the following address:

Kimberly D. Bose, Secretary
Federal Energy Regulatory Commission
888 First Street NE, Room 1A
Washington, DC 20426

Any person seeking to become a party to the proceeding must file a motion to intervene pursuant to Rule 214 of the Commission's Rules of Practice and Procedures (18 Code of Federal Regulations 385.214).[3] Only intervenors have the right to seek rehearing of the Commission's decision. The Commission grants affected landowners and others with environmental concerns intervenor status upon showing good cause by stating that they have a clear and direct interest in this proceeding which no other parties can adequately represent. **Simply filing environmental comments will not give you intervenor status, but you do not need intervenor status to have your comments considered.**

Additional information about the Project is available from the Commission's Office of External Affairs at **(866) 208-FERC** or on the FERC website (www.ferc.gov) using the eLibrary link. Click on the eLibrary link, click on "General Search," and enter the docket number excluding the last three digits in the Docket Number field (i.e., CP16-4). Be sure you have selected an appropriate date range. For assistance, please contact FERC Online Support at FercOnlineSupport@ferc.gov or toll free at (866) 208-3676, or for TTY, contact (202) 502-8659. The eLibrary link also provides access to the texts of formal documents issued by the Commission, such as orders, notices, and rulemakings.

In addition, the Commission offers a free service called eSubscription which allows you to keep track of all formal issuances and submittals in specific dockets. This can reduce the amount of time you spend researching proceedings by automatically providing you with notifications of these filings, document summaries, and direct links to the documents. Go to (www.ferc.gov/docs-filing/esubscription.asp).

---

[3] See the previous discussion on the methods for filing comments.

TABLE OF CONTENTS

A. PROPOSED ACTION 1
1. INTRODUCTION 1
2. PURPOSE AND NEED 1
3. PROPOSED FACILITIES 2
4. PUBLIC PARTICIPATION AND COMMENT 4
5. LAND REQUIREMENTS 7
6. CONSTRUCTION, OPERATION, AND MAINTENANCE PROCEDURES 9
6.1 Pipeline Construction 10
6.2 Aboveground Facility Construction 15
6.3 Construction Schedule and Workforce 15
6.4 Environmental Inspection and Monitoring 15
7. PERMITS, APPROVALS, AND REGULATORY CONSULTATIONS 16
B. ENVIRONMENTAL ANALYSIS 19
1. GEOLOGY AND SOILS 19
1.1 Geology 19
1.2 Soils 21
1.3 Groundwater Resources 23
2. WATER RESOURCES AND WETLANDS 26
2.1 Surface Water Resources 26
2.2 Hydrostatic Test Water 30
2.3 Wetlands 31
3. VEGETATION, WILDLIFE, AND FISHERIES 34
3.1 Vegetation 34
3.2 Wildlife 37
3.3 Fisheries 39
3.4 Special Status Species 39
4. LAND USE, RECREATIONAL, AND VISUAL RESOURCES 44
4.1 Land Use 44
4.2 Recreation and Special Use Areas 53
4.3 Visual Resources 56
5. CULTURAL RESOURCES 58
6. AIR QUALITY AND NOISE 60
6.1 Air Quality 60
6.2 Noise 64
7. RELIABILITY AND SAFETY 66
7.1 Safety Standards 66
7.2 Pipeline Accident Data 70
7.3 Impact on Public Safety 71
8. CUMULATIVE IMPACTS 72
8.1 Identified Actions 75
8.2 Potential Cumulative Impacts of the Proposed Action 79
8.3 Conclusion 88
C. ALTERNATIVES 89
1. NO-ACTION ALTERNATIVE 89
2. SYSTEM ALTERNATIVES 89
3. LACKAWAXEN RIVER CROSSING ALTERNATIVES 90
3.1 Open Cut (Wet) Crossing Method 91
3.2 Horizontal Directional Drill Crossing Method 92
3.3 Lackawaxen River Crossing Conclusions 93

D. CONCLUSIONS AND RECOMMENDATIONS 94
E. REFERENCES 99

LIST OF FIGURES

Figure 1 Project Overview Map 3
Figure 2 Map of Project Facilities with Receipt and Delivery Points 6

LIST OF TABLES

Table A.5-1 Land Requirements 9
Table A.6-1 Areas of Rugged Topography 14
Table.A.7-1 Federal, State, and Local Permits, Approvals, and Consultations 17
Table B.1-1 Summary of Soil Characteristics in the Project Area 23
Table B.1-2 Public and Private Water Supply Wells within 150 Feet of the Proposed Facilities 25
Table B.2-1 Existing Surface Water Withdrawals and Intake Structures Within Three Miles of the Project 27
Table B.2-2 Additional Temporary Workspace Within 50 Feet of a Wetland or Waterbody 29
Table B.2-3 Hydrostatic Test Water Volumes and Sources 31
Table B.3-2 Federally and State-Listed Species Potentially Occurring in the Project Area 41
Table B.4-1 Acreage Affected by Construction and Operations of the Pipeline Facilities 45
Table B.4-2 Residences within 50 Feet of Project Construction Workspace 48
Table B.4-3 Public Roads Crossed by the Pipeline Facilities 50
Table B.4-4 Non-Public Access Roads to be Used during Construction of the Pipeline Facilities 51
Table B.4-5 Acreage Affected by Construction and Operations of the Aboveground Facilities 52
Table B.4-6 Public Land and Designated Recreation, Scenic, or Other Areas in the Project Vicinity 53
Table B.4-7 Pennsylvania Department of Agriculture Clean and Green Properties Crossed by the Project 55
Table B.6-1 Construction Emissions Summary 63
Table B.6-2 Operational Emissions Summary 64
Table B.7-1 Natural Gas Transmission Pipeline Significant Incidents by Cause (1996–2015) 70
Table B.7-2 Excavation, Natural Forces, and Outside Force Incidents by Cause (1996–2015) 71
Table B.7-3 Injuries and Fatalities – Natural Gas Transmission Pipelines 72
Table B.7-4 Nationwide Accidental Fatalities by Cause 73
Table B.8-1 Cumulative Impact Resource-Specific Regions of Influence 73
Table B.8-2 Summary of Cumulative Upland Forest Impacts for the Orion Project 81
Table B.8-3 Summary of Cumulative Wetland Impacts for the Orion Project 84
Table C.7-1 Lackawaxen River Crossing Method Comparison 91

LIST OF APPENDICES

Appendix A: Project Maps
Appendix B: Oversized Tables
Appendix C: Site-Specific Residential Construction Plans
Appendix D: List of Preparers

TECHNICAL ACRONYMS

AQCR	Air Quality Control Regions
ATWS	additional temporary workspaces
BCC	Birds of Conservation Concern
BGEPA	Bald and Golden Eagle Protection Act
BMP	best management practice
CEQ	Council on Environmental Quality
Certificate	Certificate of Public Convenience and Necessity
CFR	Code of Federal Regulations
CH_4	methane
CO_2	carbon dioxide
CO_2e	carbon dioxide equivalents
Commission	Federal Energy Regulatory Commission
CWA	Clean Water Act
dB	decibels
dBA	A-weighted decibels
DOT	U.S. Department of Transportation
Dth/d	dekatherms per day
E&SCP	Erosion and Sediment Control Plan
EA	environmental assessment
EI	environmental inspector
EPA	U.S. Environmental Protection Agency
ESA	Endangered Species Act
ESCGP	Erosion and Sediment Control General Permit
FERC	Federal Energy Regulatory Commission
FWS	U.S. Fish and Wildlife Service
GHG	greenhouse gas
GWP	global warming potential
HCA	high consequence area
HDD	horizontal directional drill
HUC	hydrologic unit code
kV	kilovolt
LCA	Landscape Conservation Area
MBTA	Migratory Bird Treaty Act
MP	milepost
N_2O	nitrous oxide
NAAQS	National Ambient Air Quality Standards
NEPA	National Environmental Policy Act of 1969
NEUP	TGP's Northeast Upgrade Project
NGA	Natural Gas Act
NOI	*Notice of Intent to Prepare an Environmental Assessment for the Proposed Orion Project and Request for Comments on Environmental Issues*
NPDES	National Pollution Discharge Elimination System
NPS	National Park Service
NRCS	U.S. Department of Agriculture Natural Resources Conservation Service
NRHP	National Register of Historic Places
NSA	noise sensitive areas
NSD	Northeast Supply Diversification Project
OEP	Office of Energy Projects
Pa. Code	Pennsylvania Code

PADCNR	Pennsylvania Department of Conservation and Natural Resources
PADEP	Pennsylvania Department of Environmental Protection
PAFBC	Pennsylvania Fish and Boat Commission
PAGC	Pennsylvania Game Commission
PaGWIS	Pennsylvania Groundwater Information System
PEM	palustrine emergent
PennDOT	Pennsylvania Department of Transportation
PFO	palustrine forested
PHMC	Pennsylvania Historic and Museum Commission
PHMSA	Pipeline Hazardous Material and Safety Administration
Plan	FERC's Upland Erosion Control, Revegetation, and Maintenance Plan
PM_{10}	particulate matter with an aerodynamic diameter less than or equal to 10 microns
$PM_{2.5}$	particulate matter with an aerodynamic diameter less than or equal to 2.5 microns
PNDI	Pennsylvania Natural Diversity Index
Procedures	FERC's Wetland and Waterbody Construction and Mitigation Procedures
PSS	palustrine scrub-shrub
Secretary	Secretary of the Federal Energy Regulatory Commission
SHPO	Pennsylvania State Historic Preservation Office
SIP	State Implementation Plans
SPCC Plan	Spill Prevention, Control, and Countermeasures Plan
SR	State Route
TAR	temporary access road
TGP	Tennessee Gas Pipeline Company
TGP's Plan and Procedures	TGP's Project-specific Plan and Procedures
USACE	U.S. Army Corps of Engineers
USC	U.S. Code
USGCRP	U.S. Global Change Research Program
USGS	U.S. Geological Survey
VOC	volatile organic compound

A. PROPOSED ACTION

1. INTRODUCTION

The staff of the Federal Energy Regulatory Commission (Commission or FERC) has prepared this environmental assessment (EA) to assess the environmental effects of the natural gas pipeline facilities proposed by Tennessee Gas Pipeline Company, L.L.C. (TGP). We[1] prepared this EA in compliance with the requirements of the National Environmental Policy Act of 1969 (NEPA), Title 40 of the Code of Federal Regulations, Parts 1500–1508 (40 CFR 1500–1508), and with the Commission's implementing regulations under 18 CFR 380.

On October 9, 2015, TGP filed an application with the Commission in Docket No. CP16-4-000 under section 7(c) of the Natural Gas Act (NGA) and Part 157, Subpart F of the Commission's regulations for a Certificate of Public Convenience and Necessity (Certificate) authorizing TGP to construct and operate two new natural gas pipeline loops,[2] modify an existing compressor station, and add new tie-in facilities in Wayne and Pike Counties, Pennsylvania to increase natural gas delivery capacity along TGP's 300 Line system. The Project is referred to as the Orion Project (Project).

Our EA is an integral part of the Commission's decision on whether to issue TGP a Certificate to construct and operate the proposed facilities. Our principal purposes in preparing this EA are to:

- identify and assess potential impacts on the natural and human environment that could result from implementation of the proposed action;
- identify and recommend reasonable alternatives and specific mitigation measures, as necessary, to avoid or minimize Project-related environmental impacts; and
- facilitate public involvement in the environmental review process.

FERC is the federal agency responsible for authorizing interstate natural gas transmission facilities under the NGA, and is the lead federal agency for the preparation of this EA in compliance with the requirements of NEPA. Wetlands and waterbodies within the Project area are regulated at the federal and state levels. The Philadelphia District of the U.S. Army Corps of Engineers (USACE) elected to cooperate in preparing this EA because it has jurisdictional authority pursuant to Section 404 of the Clean Water Act (CWA) (33 U.S. Code [USC] 1344), which governs the discharge of dredged material or placement of fill into waters of the United States, and Section 10 of the Rivers and Harbors Act (33 USC 403), which regulates any work or structures that potentially affect the navigable capacity of designated waterbodies.

2. PURPOSE AND NEED

TGP states that the purpose of the Project is to increase natural gas transportation in order to respond to the needs of three contracted shippers. The Project would allow TGP to provide approximately 135,000 dekatherms per day (Dth/d) of west-to-east natural gas capacity on TGP's 300 Line to provide long-term firm transportation service to the Project shippers: South Jersey Resources Group, LLC; South Jersey Gas Company; and Cabot Oil & Gas Corporation, all of which fully subscribed to the firm transportation capacity to be created by the Project. The Project entry point for the additional

---

[1] "We," "us," and "our" refer to environmental staff of the Office of Energy Projects.

[2] A loop is a pipeline that is constructed parallel to an existing pipeline to increasing capacity in this portion of the system.

natural gas would be at an existing TGP interconnect with Williams Field Services Company, LLC in Susquehanna County, Pennsylvania, and the Project exit point for these additional natural gas deliveries would be at an existing TGP interconnect with Columbia Gas Transmission, LLC in Pike County, Pennsylvania.

Under Section 7(c) of the NGA, the Commission determines whether interstate natural gas transportation facilities are in the public convenience and necessity and, if so, grants a Certificate to construct and operate them. The Commission bases its decisions on technical competence, financing, rates, market demand, gas supply, environmental impact, long-term feasibility, and other issues concerning a proposed project.

3. PROPOSED FACILITIES

The Project consists of 8.2 miles of 36-inch-diamater natural gas pipeline loop (Loop 322) in Wayne and Pike Counties, Pennsylvania; 4.7 miles of 36-inch-diameter natural gas pipeline loop (Loop 323) in Pike County, Pennsylvania; modifications to TGP's existing Compressor Station 323 in Pike County; and additional ancillary facilities at the up-stream and down-stream tie-in points.

Loop 322 would commence in Wayne County, approximately 3 miles southeast of the borough of Honesdale within TGP's existing 300 Line system right-of-way and would extend 8.2 miles southeast to the existing Compressor Station 323. Loop 322 would be co-located with TGP's existing 300 Line system for approximately 6.8 miles, and the remaining 1.4 miles of Loop 322 would parallel the right-of-way of an existing electric transmission line.

Loop 323 would commence in Pike County at TGP's existing Compressor Station 323 and would extend 4.7 miles to terminate approximately 1 mile south of Lackawaxen Township in Pike County. Loop 323 would be entirely co-located with TGP's existing 300 Line system.

The Project would also involve modifying TGP's existing Compressor Station 323 in Pike County. Modifications to Compressor Station 323 would include restaging one compressor and adding new piping, ancillary equipment, and an odorant facility. Additionally, TGP proposes to construct new pigging facilities[3] (specifically, a pig launcher at milepost [MP] 0.0 at the upstream tie-in site and a pig receiver at MP 12.9 at the downstream tie-in site), and ancillary piping at the up-stream and down-stream tie-in points of the new pipeline loops.

A Project overview map is included as figure 1. More detailed maps are provided in appendix A.

[3] A "pig" is a tool that the pipeline company inserts into and pushes through the pipeline for cleaning the pipeline, conducting internal inspections, or other purposes.

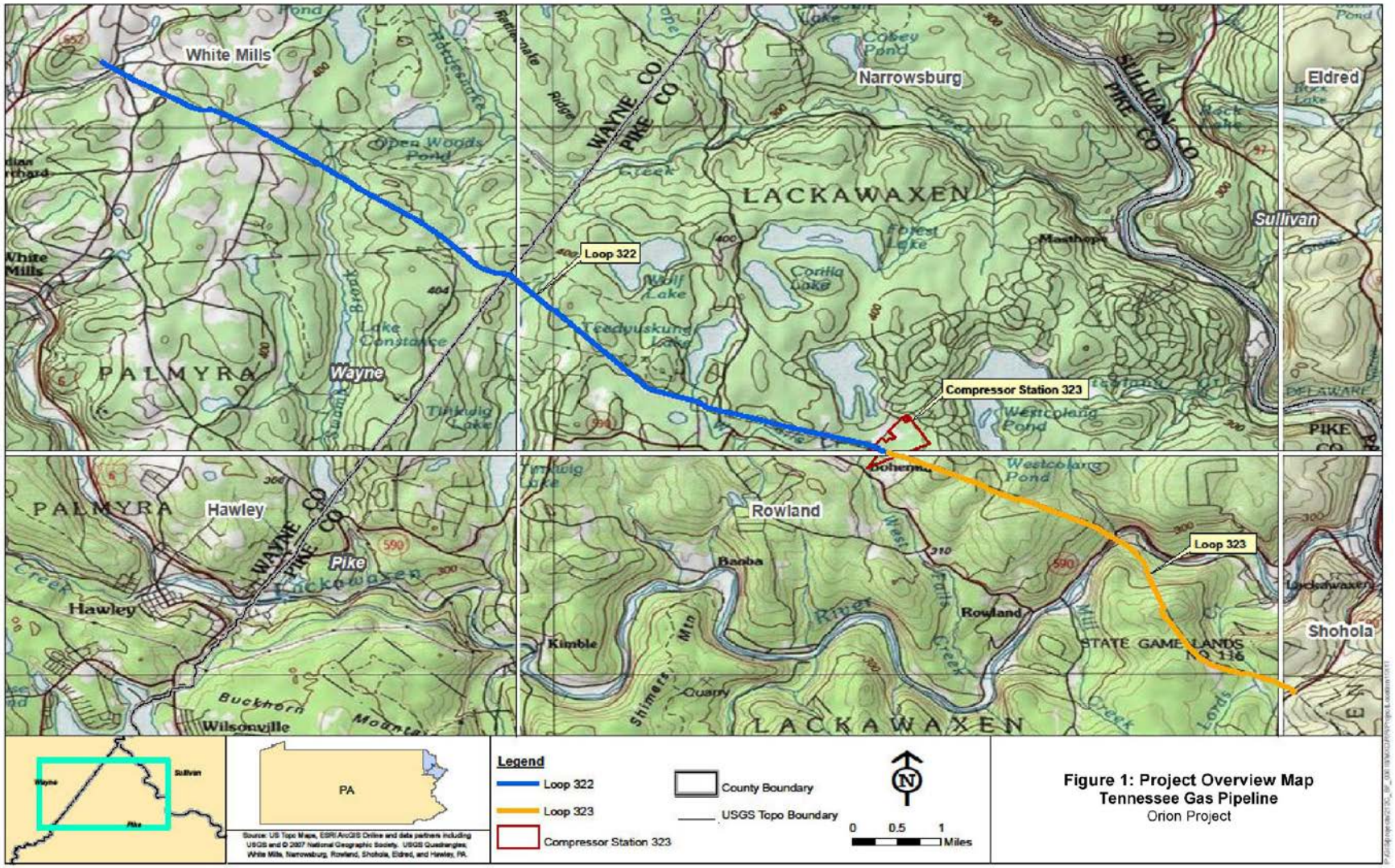

Figure 1: Project Overview Map
Tennessee Gas Pipeline
Orion Project

4. PUBLIC PARTICIPATION AND COMMENT

On November 23, 2015, the Commission issued a *Notice of Intent to Prepare an Environmental Assessment for the Proposed Orion Project and Request for Comments on Environmental Issues* (NOI)[1]. The NOI was mailed to interested parties including federal, state, and local officials; agency representatives; Native American tribes; local libraries and newspapers; and property owners affected by the proposed facilities. This notice opened the scoping period for 30 days. On December 3, 2015, due to a mailing error, the Commission issued a supplemental NOI[2] extending the scoping period an additional 12 days to allow all potential stakeholders list adequate time to submit comments. We received four comments during the scoping period in response to the NOIs. Written comments regarding environmental issues were received from the National Park Service (NPS) and several individuals. We also received comments from the Alleghany Defense Project, Damascus Citizens for Sustainability, Delaware Riverkeeper, and Sierra Club, which were included in each parties' motion to intervene.

The comments primarily concerned Project need; impacts on groundwater and surface water resources, including the Upper Delaware Scenic and Recreational River, request for an alternate crossing method of the Lackawaxen River, and wetland impacts due to erosion and sedimentation, and vegetation conversion; impacts on wildlife, fisheries, and threatened and endangered species; forest clearing and fragmentation associated with pipeline construction; restoration of tree plantings following pipeline construction; impacts on land use and recreation; air quality impacts from construction vehicles; noise impacts from compressor stations; impacts on historic resources downstream of the Lackawaxen River crossing; impacts from blasting; safety during pipeline construction; operational safety concerns; segmentation of the environmental review associated with other TGP projects; and cumulative impacts from other TGP projects and upstream natural gas development, including shale gas development. Environmental comments received during the scoping period are addressed in the applicable sections of the EA.

We also received requests that we prepare an Environmental Impact Statement (EIS) for the Project, or in combination with other proposed TGP projects. Based on our evaluation of the scope and impacts associated with the Orion Project, we have not identified any impacts associated with the Project construction and operation that would significantly affect the quality of the human environment. Therefore, we conclude that an EA is appropriate for evaluating the potential impacts associated with the Project.

In addition, several comments received during the scoping period identified other TGP projects that would be located on the 300 Line, specifically the proposed Susquehanna West[3] and Triad Expansion[4] Projects, as connected, cumulative, and/or similar actions and asked that we review these projects in a single NEPA document. TGP's Susquehanna West and Triad Expansion Projects are independent projects that were evaluated in separate NEPA analyses.

---

1 A copy of the Orion Project NOI was published in the Federal Register on December 1, 2015, and can be viewed at: https://www.gpo.gov/fdsys/pkg/FR-2015-12-01/html/2015-30427.htm.

2 A copy of the supplemental Orion Project NOI was published in the Federal Register on December 9, 2015, and can be viewed at: https://www.gpo.gov/fdsys/pkg/FR-2015-12-09/html/2015-30960.htm.

3 The Susquehanna West Project is under review by FERC in a separate proceeding under Docket No. CP15-148-000. An EA for the Susquehanna West Project was placed on public notice on March 17, 2016.

4 The Triad Expansion Project is under review by FERC in a separate proceeding under Docket No. CP15-520-000. An EA for the Triad Expansion Project was placed on public notice on June 15, 2016.

Under the Council on Environmental Quality's (CEQ) regulations, actions are "connected" if they: "[a]utomatically trigger other actions which may require environmental impact statements"; "[c]annot or will not proceed unless other actions are taken previously or simultaneously;" or "[a]re interdependent parts of a larger action and depend on the larger action for their justification."[5] In evaluating whether multiple actions are, in fact, connected actions, a "substantial independent utility" test helps inform the Commission's analysis. The test asks "whether one project will serve a significant purpose even if a second related project is not built."[6]

Demand for natural gas transportation increases incrementally; to meet this incremental demand natural gas companies expand their pipeline accordingly. Based on these three projects' (i.e., the Orion, Triad Expansion, and Susquehanna West Projects) geographically separate facilities, separate transportation paths serving discrete receipt and delivery points, and independent financing under long-term contracts, we conclude that each project has substantial independent utility and the Orion Project is not a connected action with the others.

As further described in section A.2 of this EA, the Orion Project facilities include 8.2 miles of 36-inch-diameter pipeline loop in Wayne and Pike Counties, Pennsylvania to provide 135,000 Dth/d of additional west-to-east transportation capacity. By contrast the Susquehanna West Project facilities, approximately 53 miles west of the Orion Project, include 8.1 miles of 36-inch-diameter pipeline loop in Tioga and Bradford Counties, Pennsylvania, with related modifications to Compressor Station 315 in Tioga County, and modifications to Compressor Stations 317 and 319 in Bradford County, Pennsylvania to provide 145,000 Dth/d of additional east-to-west transportation capacity. The Triad Expansion Project facilities, approximately 23 miles from both the Orion and Susquehanna West Projects, include 7.0 miles of new 36-inch-diameter pipeline loop and modifications to Compressor Station 321, both entirely in Susquehanna County, Pennsylvania, to provide 180,000 Dth/d of additional west-to-east transportation capacity. Figure 2 shows the various facilities associated with each project.

Though the Orion Project facilities, like those of the proposed Susquehanna West and Triad Expansion Projects, would be installed on a portion of the 300 Line, construction would not occur close in distance to one another, as described above.

The proposed Orion Project would function independently from the proposed Susquehanna West and Triad Expansion Projects not only because the project facilities would be constructed along different areas of the 300 Line, but also because the transportation paths for each project do not rely on the construction of the other projects' facilities. Each project's transportation path serves one or more different shippers under separate long-term contracts for the project's full capacity for service between discrete receipt and delivery points. Each project's separately contracted service would be able to proceed independently of the other projects.

---

[5] 40 C.F.R. § 1508.25(a)(1)(i)-(iii) (2016).

[6] *See Coalition on Sensible Transp., Inc. v. Dole*, 826 F.2d 60, 69 (D.C. Cir. 1987). *See also O'Reilly v. U.S. Army Corps of Eng'rs*, 477 F.3d 225, 237 (5th Cir. 2007) (defining independent utility as whether on project "can stand alone without requiring construction of the other [projects] either in terms of other facilities required or of profitability").

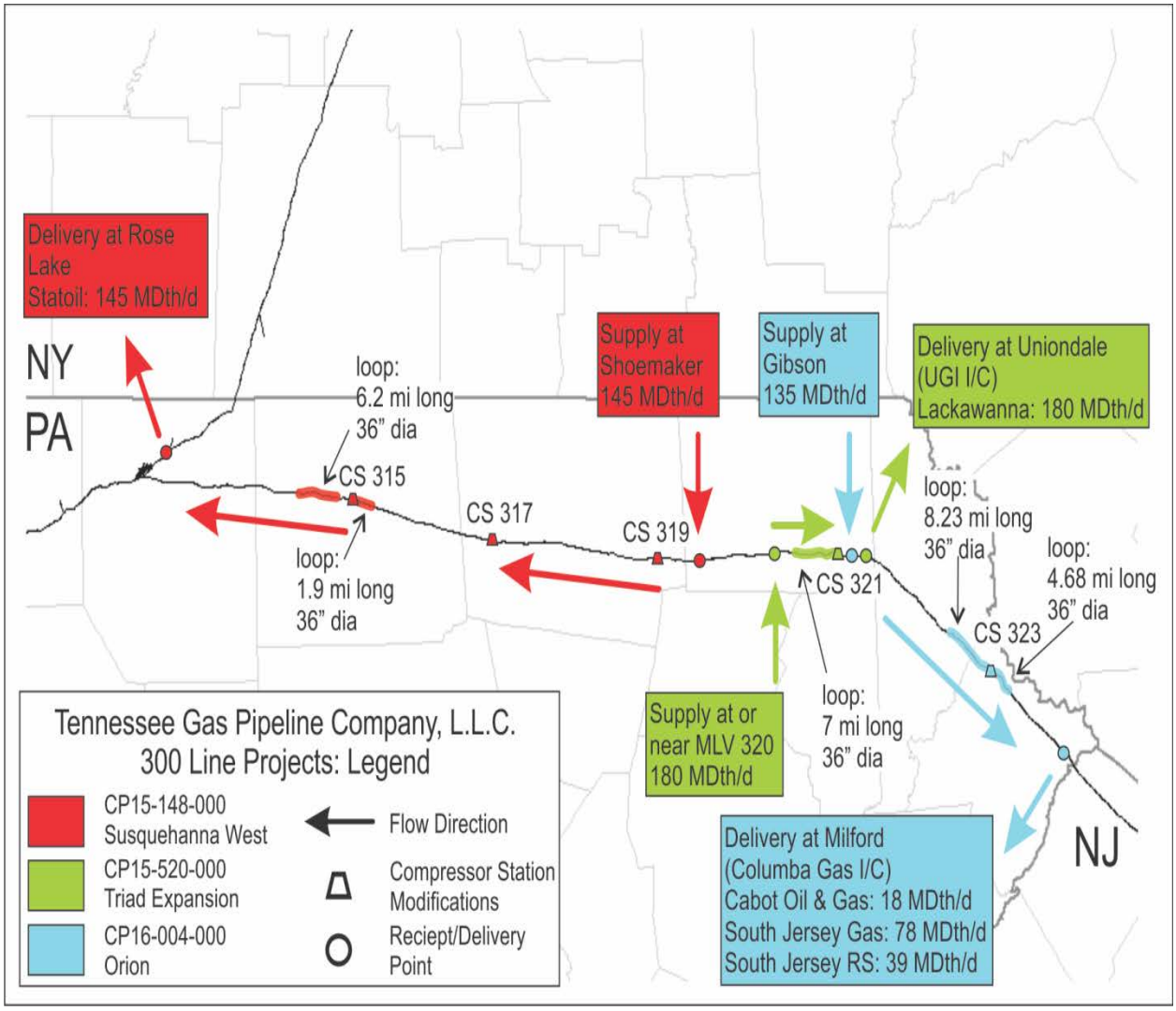

In the open season for the Orion Project from January 30 to February 20, 2015, South Jersey Resources Group, LLC; South Jersey Gas Company; and Cabot Oil & Gas Corporation subscribed for service using the full capacity from a receipt point at an interconnection with Williams Field Services Company, LLC (Meter 47768) in the town of Gibson, Susquehanna County, Pennsylvania, to a delivery point at an interconnection with Columbia Gas Transmission, LLC (Meter 420245) in the town of Milford in Pike County, Pennsylvania (see figure 2). This west-to-east transportation path would overlap slightly with the transportation path for the Triad Expansion Project. However, the small portion of the transportation path that overlaps does not rely on the looping facilities proposed in the Triad Expansion Project. In the open season for the Triad Expansion Project from March 11 to April 1, 2015, Lackawanna Energy Center, LLC subscribed for service using the full capacity from a receipt point at the Korban meter (412794) and delivery point at the Uniondale meter (420203) both in Susquehanna County. In the open season for the Susquehanna West Project from August 18 to September 8, 2014, Statoil Natural Gas LLC subscribed for east-to-west service using the full capacity from a receipt point at the Shoemaker Dehydration receipt meter (412846) in Shoemaker, Susquehanna County, to a delivery point at the Rose Lake meter (420527) in Rose Lake, Potter County, Pennsylvania. None of the transportation path for the Susquehanna West Project overlaps with the paths of either the Orion or Triad Expansion Projects.

Based on this information—geographically separate facilities, separate transportation paths, and independent financing under long-term contracts—we conclude that each project has substantial independent utility and does not meet any of the three factors for a connected action.

The CEQ's definitions of cumulative actions and similar actions both focus on shared timing or geography.[7] Because these projects do not occur close in distance to one another, we conclude that they do not satisfy either definition and that analyzing them in the same NEPA document is not the best way to assess their combined impacts or reasonable alternatives. For the reasons above, we decided to analyze each project in its own NEPA document as they are not connected, cumulative, or similar actions. We did consider whether the Susquehanna West and Triad Expansion Projects would have cumulative impacts on environmental resources when added to impacts of the Orion Project, and concluded that they would not (see section B.8.1.1).

We also received comments from the Allegheny Defense Project in its motion to intervene suggesting that authorization of the Orion Project would induce additional shale gas development in the Marcellus and Utica Shale formations. As the Commission has previously concluded in natural gas infrastructure proceedings, the environmental effects resulting from natural gas production are generally neither caused by a proposed pipeline project (or other natural gas infrastructure) nor are they reasonably foreseeable consequences of Commission approval of an infrastructure project, as contemplated by CEQ regulations. A causal relationship sufficient to warrant Commission analysis of the non-pipeline activity as an indirect impact would only exist if the proposed pipeline would transport new production from a specified production area and that production would not occur in the absence of the proposed pipeline (i.e., there would be no other way to move the gas). In this case, while the Orion Project would likely transport gas generated from the Marcellus and Utica Shale formations, the information available regarding this Project does not demonstrate the requisite reasonably close causal relationship between the impacts of future natural gas production and the Orion Project that would necessitate further analysis. The fact that natural gas production and transportation facilities are all components of the general supply chain required to bring domestic natural gas to market is not in dispute. This does not mean, however, that the Commission's approval of this particular pipeline project would cause or induce the effect of additional or further shale gas production. The Orion Project is responding to the need for transportation, not creating it. In section B.8 of this EA, we consider the cumulative impact of the proposed Project in addition to other natural gas production facilities in the region.

5. LAND REQUIREMENTS

The new pipeline loop segments would primarily be installed within TGP's existing permanent right-of-way and parallel to its existing 300 Line system, offset approximately 25 feet from TGP's existing 300-1 or 300-2 line. The new segments would be referred to as the 300-3 line. Approximately 1.4 miles of pipeline would be adjacent to the right-of-way associated with an electric transmission line. The typical upland construction right-of-way width would be 110 feet. Where the pipeline would be co-located with the existing TGP 300 Line system, the construction right-of-way would consist of a 50-foot-wide temporary workspace, a 35-foot-wide portion of the existing permanent easement associated with the 300 Line system, and a new 25-foot-wide area adjacent to the existing 300 Line system permanent easement that would be maintained as permanent easement for the new pipeline loop. Where the proposed pipeline is adjacent to the electric transmission line right-of-way, the construction right-of-way would consist of a 60-foot-wide temporary workspace, 10 feet of which would overlap the electric transmission line right-of-way, and a new 50-foot-wide area that would be maintained as permanent easement for the new pipeline loop. A wider area of temporary workspace would be required in areas

[7] 40 C.F.R. § 1508.25(a)(2) and (3) (2016).

adjacent to the electric transmission line right-of-way because the existing TGP pipeline permanent easement is not available in this area for temporary use during construction; however, the overall construction right-of-way width would be the same as areas adjacent to TGP's 300 Line system. In wetlands, the construction right-of-way would be reduced to 75 feet wide or less. Typical right-of-way diagrams for construction and operation of the pipeline are included in appendix A (see figures 2, 3, and 4).

Construction requirements include all temporary workspace areas, existing permanent easement or fee property, new permanent easement, and access roads associated with the Project. The footprint of all Project-related disturbances during construction is estimated at 262.6 acres. Table A.5-1 provides a summary of the acreages of land required for construction of the Project.

Operation of the Project would require an additional 25 feet of permanent right-of-way adjacent to the existing 300 Line easement in most areas. TGP proposes to use 25 feet of existing right-of-way associated with the existing permanent easement of the 300 Line system and to add 25 feet of new permanent easement, except in locations where the pipeline is adjacent to an existing electric transmission line right-of-way, where 50 feet of new permanent easement would be required. The width of TGP's existing permanent right-of-way for the 300 Line system in the Project area varies from 50 feet to 150 feet. As a result of the Project, the proposed total permanent easement width would increase to between 75 feet and 175 feet, except in areas where the new pipeline is not directly adjacent to the existing 300 Line system.

The Project would require approximately 79.3 acres of permanent right-of-way for operation, of which 43.9 acres would be new permanent right-of-way, as detailed in table A.5-1.

Access Roads, Staging Area/Pipe Yard, and Additional Temporary Workspace

TGP proposes to use 19 private roads to access the right-of-way during construction. TGP would conduct improvements for three of the existing private access roads. The improvements include grading and road resurfacing and installing a temporary culvert. The remaining 16 proposed access roads do not require improvements. The acreage of impact from the improvements to the three access roads is included in table A.5-1.

Extra workspace, including additional temporary workspaces (ATWS) and staging areas, are typically required at road, railroad, existing utility, pipeline interconnections, wetland, and waterbody crossings, hydrostatic test water withdrawal locations, as well as aboveground facility locations. These workspaces vary in size and depend on site-specific conditions and the construction method or need. TGP has identified three staging areas and 82 areas of ATWS required for the construction of the Project, which are listed in table 4 of appendix B.

TABLE A.5-1

Land Requirements

Project Component	Construction Workspace (acres) [a]	New Permanent Right-of-Way (acres) [b]	Existing Permanent Right-of-Way (acres) [c]
LOOPS 322 and 323			
Pipeline Facilities	157.4	43.2	35.0
ATWS and Water Withdrawal Locations	29.3	0.0	0.0
Staging Areas	8.5	0.0	0.0
Access Roads	16.0	0.5	0.1
Pipeline Facilities Subtotal	**211.2**	**43.7**	**35.1**
PIPE YARD			
Pipe Yard 1 (MP 1.4) [d]	13.3	0.0	0.0
Pipe Yard 2 (MP 0.0) [d]	22.3	0.0	0.0
Pipe Yard 3 (MP 0.8) [d]	15.4	0.0	0.0
Pipe Yard Subtotal	**51.0**	**0.0**	**0.0**
ABOVEGROUND FACILITIES			
Compressor Station 323 Modifications [e]	<0.1	<0.1	0.0
Upstream Tie-in Site [f]	0.2	0.0	0.2
Downstream Tie-in Site	0.2	0.1	0.1
Aboveground Facilities Subtotal	**0.4**	**0.2**	**0.3**
PROJECT TOTALS	**262.6**	**43.9**	**35.4**

[a] Areas disturbed by construction activities, including 110-foot-wide construction right-of-way. Access roads include acreage of improvements.

[b] New 25-foot-wide right-of-way adjacent to existing permanent easement for 300-1 and 300-2 lines or 50-foot-wide permanent easement acquired for the operation of 300-3 line, excluding temporary construction right-of-way.

[c] Portion of existing 300 Line system permanent right-of-way to be use for the operation of the Project.

[d] Approximate closest milepost along proposed pipeline loop rounded to the nearest tenth.

[e] Land impacts at the compressor station would occur within the existing fenced property boundaries.

[f] A portion of the construction land impacts associated with the upstream tie-in site is included in the pipeline facility construction workspace.

In addition, TGP proposes to use three pipe yards, which range in size from approximately 13.3 to 22.3 acres. Total acreages of the proposed pipe yards are detailed in table A.5-1. None of the areas of ATWS or the pipe yard would be used for pipeline operation, and would revert to previous land use following construction. TGP states that the forested areas along the edges of Yard No. 3, primarily in sloped areas, would not be disturbed.

6. CONSTRUCTION, OPERATION, AND MAINTENANCE PROCEDURES

The proposed facilities would be designed, constructed, tested, operated, and maintained in accordance with the U.S. Department of Transportation (DOT) Minimum Federal Safety Standards in 49 CFR 192. The DOT's regulations are intended to ensure adequate protection for the public and to prevent natural gas facility accidents and failures. Part 192 specifies material selection and qualification, minimum design requirements, and protection from internal, external, and atmospheric corrosion.

Generally, installation of the pipeline would be conducted using conventional overland construction techniques, where each of the construction spreads (crews) proceeds along the pipeline right-of-way in one continuous operation, with the entire process coordinated to minimize the total amount of time any given tract of land is disturbed. Pipeline construction techniques are further detailed in the following sections. Special construction techniques would be implemented when crossing sensitive resources, such as wetlands and waterbodies, as well as roadways and certain other areas. TGP proposes

to follow the construction procedures and mitigation measures contained in FERC's *Upland Erosion Control, Revegetation, and Maintenance Plan* (Plan) and *Wetland and Waterbody Construction and Mitigation Procedures* (Procedures),[8] with three alternate measures to FERC's Procedures regarding ATWS wetland and waterbody set-backs (discussed in sections B.2.1 and B.2.3); slope breakers (discussed in section B.2.3); and wetland seed and mulch requirements (discussed in section B.2.3). As further discussed in section B.2.1 and B.2.3, we have reviewed these proposed alternate measures to FERC's Procedures and find them acceptable. Therefore, TGP would follow its Project-specific Plan and Procedures (TGP's Plan and Procedures), which include these alternate measures. TGP would incorporate its Plan and Procedures, as well as these alternate measures, into its Erosion and Sediment Control Plan (E&SCP), which would be finalized and submitted to the Commission prior to construction.

In addition to its E&SCP, TGP would implement other construction, restoration, and mitigation plans for the Project, including its Winter Construction Plan; *Spill Prevention, Control, and Countermeasures Plan* (SPCC Plan), which contains measures to prevent and respond to any inadvertent releases of hazardous materials as well as notification procedures in the event of a release; *Water Well Testing Program*; *Noxious and Invasive Weed Control Plan*; *Migratory Bird Conservation Plan*; *Unanticipated Discovery of Historic Properties and Human Remains Plan*; *Site-Specific Residential Construction Plans* (for residences within 25 feet of the Project – see appendix C); and *Blasting Plan*. We have reviewed these construction and mitigation plans and have found them acceptable.

6.1 Pipeline Construction

TGP would use the techniques described below to construct the natural gas pipeline loops. Prior to construction, TGP would stake the pipeline centerline and the limits of the construction right-of-way, ATWS areas, highway and railroad crossings, access roads, and environmentally sensitive areas.

6.1.1 Clearing and Grading

Clearing operations involve removing vegetation, including trees, within the construction right-of-way or construction work areas. TGP's proposed pipeline loops consist mainly of forested and open land. TGP would clear trees along the pipeline right-of-way between either September 1 or October 1 and March 31 to avoid impacts on sensitive species as further described in section B.3. Felled trees may be left on the right-of-way (except in wetlands, waterbodies, and other sensitive resources) until grading activities commence in the spring to further minimize ground disturbance.

After clearing is complete, TGP would install temporary erosion control devices along the limits of wetland boundaries within the construction right-of-way. Grading of the construction right-of-way would be necessary for the movement of heavy equipment and safe passage for work crews.

6.1.2 Trenching

In accordance with TGP's Plan, measures would be employed to minimize soil erosion during trenching. In addition, measures such as installing trench breakers would be taken to prevent the flow of water through the trench.

To minimize impacts on agricultural lands, wetlands, and residential lands, topsoil would be segregated from subsoil during trenching and would remain segregated during construction to avoid loss

[8] Copies of the Plan and Procedures may be accessed on our website (http://www.ferc.gov/industries/gas/enviro/guidelines.asp) or obtained through our Office of External Affairs at 1-866-208-3372.

due to mixing with subsoil material. Upon completion of backfilling operations, the topsoil would be replaced over the graded area. TGP would utilize either full right-of-way topsoil segregation, which involves removal and segregation of topsoil over the entire construction right-of-way prior to commencing construction, or ditch-plus-spoil-side topsoil segregation, which involves removal and segregation of topsoil from the excavation ditch and spoil storage area prior to commencing construction, as requested by the landowner or as required by the Wayne and/or Pike County Conservation District.

The trench would be at least 14 inches wider than the diameter of the pipe. Typically, the trench for a pipeline must be excavated to a depth that allows for a minimum of 36 inches of cover in accordance with DOT regulations. However, at crossings of foreign pipelines, utilities, or other structures, the pipe may be buried deeper to allow for a minimum of 12 inches of clearance.

6.1.3 Pipe Stringing, Preparation, and Lowering In

Pipe stringing involves moving the pipe into position along the construction right-of-way in a continuous line parallel to the excavated trench in preparation for subsequent lineup and welding operations. The pipe is then bent, where necessary, to conform to changes in the direction of the alignment and natural ground contours. After the pipe has been bent, it would be lined up and welded, and then the welds and pipe coating would be inspected. Side-boom tractors would be used to lower the pipe into the trench. Trench dewatering would be performed in accordance with TGP's Plan and Procedures.

6.1.4 Backfilling and Grade Restoration

After the pipe is lowered into the trench, the trench would be backfilled using the material originally excavated from the trench. Topsoil would not be used for padding the pipeline. In some cases, additional backfill material from other sources may be used. In areas where topsoil has been segregated, the subsoil would be placed in the bottom of the trench, followed by replacing the topsoil over the subsoil layer. The surface of the construction work space would be graded to conform to pre-existing contours of the adjoining area, except for a slight crown of soil over the trench (in upland areas only) to compensate for natural subsidence of the backfill material.

6.1.5 Cleanup and Restoration

Weather and soil conditions permitting, final cleanup would occur within 20 days after the trench is backfilled (within 10 days in residential areas). After backfilling is complete, all disturbed areas would be graded to the original contours, any remaining debris properly disposed of, permanent erosion controls constructed or installed, and the right-of-way seeded with an appropriate seed mix. Examples of typical erosion control devices include slope breakers, sediment barriers (such as silt fence or straw bales), and mulch. All restoration activities would be completed according to TGP's Plan and Procedures. Seeding would be completed according to the recommendations of the Natural Resources Conservation Service (NRCS), the applicable County Conservation Districts, and landowner agreements.

To comply with DOT specifications, TGP would hydrostatically test all pipeline facilities prior to placing them in service. Hydrostatic testing is further discussed in section B.2.2.

6.1.6 Special Pipeline Construction Procedures

TGP would use special construction techniques when constructing across waterbodies, wetlands, roads, railroads, residential areas, areas of rugged terrain, and areas where blasting would be required, as described below.

Waterbody Crossings

TGP has proposed to cross all waterbodies using dry crossing techniques, with the exception of a tributary to West Falls Creek. TGP would cross ephemeral waterbodies and ditches where there is no perceptible flow at the time of crossing using standard upland crossing techniques. TGP would maintain adequate equipment on site to conduct a dry-ditch crossing should perceptible flow occur during construction.

The proposed crossing method for each of the waterbodies in the Project area is included in section B.2.1.

Dry-Ditch Crossing Method

A dry-ditch waterbody crossing consists of either a flume crossing, a dam-and-pump crossing, or cofferdam crossing method. A flume crossing involves diverting the flow of water across the construction work area through one or more flume pipes placed in the waterbody. Sandbags or other diversion structures are placed directly in the waterbody upstream and downstream of the pipeline centerline to divert the water flow through the flume pipes. The trench line is then isolated and pumped dry, allowing construction crews to excavate the trench and install the pipe. Downstream water flow would be maintained until the trench is backfilled, at which time the dams and flume pipe are removed.

The dam-and-pump crossing method involves using pumps and hoses instead of flumes to move water around the construction work area. Water flow would be maintained while the pipeline is installed and the trench backfilled. After backfilling, the dams, pumps, and hoses are removed and the banks restored and stabilized.

The cofferdam crossing method involves installation of a cofferdam to isolate the flow of the waterbody allowing work in approximately half of the waterbody. The flow in the waterbody is maintained in the open half of the stream, while the pipeline is installed in the portion of the stream that is dry. Once half of the stream has been crossed, the process is repeated on the second half of the stream. The cofferdam crossing method allows recreational uses of the waterbody to continue during the construction process.

To the extent possible, streambeds would be returned to their preconstruction contours, and stream and river banks restored to their preconstruction condition and allowed to revegetate in accordance with TGP's Procedures and applicable permit conditions.

Open Cut (Wet) Method

An open cut, or wet, crossing consists of excavating a pipeline trench in a waterbody without diverting or pumping water from the workspace/crossing area. In general, the pipe is welded together in the staging areas and then carried or floated along the right-of-way into place. After the pipe is lowered into the trench, previously excavated material would be returned to the trench line for backfill.

To the extent possible, streambeds would be returned to their preconstruction contours, and stream and river banks restored to their preconstruction condition and allowed to revegetate in accordance with TGP's Procedures and applicable permit conditions.

TGP proposes to use the open cut crossing method at a tributary to West Falls Creek. TGP also examined crossing the Lackawaxen River using an open cut crossing, which is further discussed in section C.7. Further details regarding the stream crossings are included in section B.2.1.

Wetland Crossings

Wetland boundaries would be delineated and marked in the field prior to construction activities. The pipeline construction right-of-way width in wetlands would be limited to 75 feet. Woody vegetation within the construction right-of-way would be cut off at ground level and removed from the wetlands, leaving the root systems intact. The pulling of tree stumps and grading activities would be limited to the area directly over the trench line unless it is determined that safety-related construction constraints require grading or the removal of stumps from the working side of the right-of-way. Construction equipment operating in wetland areas would be limited to that needed to clear the right-of-way, dig the trench, install the pipeline, backfill the trench, and restore the right-of-way. Topsoil segregation would be utilized in unsaturated wetlands to preserve the existing seed bank and aid in the successful restoration of the disturbed wetland. Trench plugs would be installed as necessary to maintain wetland hydrology.

The specific crossing procedures used to install the pipeline across wetlands would depend on the level of soil stability and saturation encountered during construction. Construction across unsaturated soils that can support the weight of equipment would be conducted in a manner similar to the upland construction procedures. In areas that are proposed for conventional open trench construction, but where soil conditions may not support the weight of equipment, timber mats would be used to minimize disturbance to wetland hydrology and maintain soil structure.

The push-pull method of construction could be used in inundated or saturated conditions where wetland soils and hydrology cannot support conventional pipe laying equipment, or in areas that have significant quantities of water that would allow for the pipe to be floated over the open trench. With this method, construction and excavation equipment would work from temporary work surfaces, and a prefabricated pipeline segment would be pulled or floated into position then sunk with buoyancy control devices and placed in the trench.

Road and Railroad Crossings

Construction across paved roads, highways, and railroads would be conducted in accordance with TGP's Plan and Procedures and requirements identified in road and railroad crossing permits or approvals. Roads, highways, and railroads where traffic cannot be detoured would be crossed using the conventional subsurface boring beneath the roadbed or railroad (see table B.4-3). Typically, there would be little or no disruption to traffic at road, highway, or railroad crossings during boring operations. Roads where traffic can be detoured would be crossed via open cut.

<u>Conventional Bore Method</u>

The conventional bore method allows for trenchless construction across an area by excavating a pit on each side of the feature, placing boring equipment within the pits, boring a hole under the feature, and pulling a section of pipe through the hole. This method is used to avoid direct impacts on sensitive features or areas that otherwise present difficulties for standard pipeline construction.

A total of 13 public and private roads would be crossed by the Project. Seven of these roads would be crossed using the open cut construction technique, and the remaining six roads would be crossed using the conventional bore method. For all road crossings, TGP would ensure that construction activities do not prohibit the passage of vehicles and would make provisions for traffic management during construction as necessary.

Residential Areas

TGP has identified all residences within 50 feet of any construction workspace and would implement mitigation measures, in accordance with its Plan, to minimize impacts on these houses and the residents. In addition, TGP has prepared site-specific construction plans for residences within 25 feet of the construction right-of-way (see appendix C). After construction, final grading would be conducted within 10 days of backfilling the trench, and all turf, ornamental shrubs, and specialized landscaping would be restored in accordance with TGP's E&SCP or specific landowner request. See section B.4.1 for further information on residential areas.

Rugged Terrain

Areas of steeply sloped topography and rugged terrain are present along portions of the proposed pipeline loops. These areas can be susceptible to landslides, or slips, following trench backfill. TGP has proposed to use two-tone cut and fill construction methods on side slopes. This construction method involves grading to cut down the upslope side of the construction right-of-way and using material from that cutting to fill the downslope side of the construction right-of-way to create a safe and level surface for travel lanes and equipment operation. During grade restoration, the spoil would be placed back in the cut and compacted. Any springs or seeps found in the cut would be directed downslope using temporary piping or gravel drains.

In areas where slopes exceed 28 degrees, TGP has proposed to use the winching technique, which involves placing and anchoring a tractor at the top of the slope and using a winch to manipulate equipment up and down the slope. Table A.6-1 identifies areas along the Project route where slopes greater than 28 degrees would be encountered. In addition, TGP has requested ATWS in areas of rugged terrain to accommodate trench spoil, excess rock material, and cut timber.

TABLE A.6-1

Areas of Rugged Topography

Project Component	Beginning Milepost	Distance (feet) [a]
LOOPS 322 and 323		
	0.09	246
	0.17	114
	0.24	50
	1.01	36
	7.66	212
	7.75	53
	9.19	44
	10.40	982
	10.92	193
	11.41	86
	11.53	110
Project Total		**2,126**

[a] Excludes areas of steep slope less than 10 linear feet in length.

Blasting

Construction through areas with shallow bedrock may require blasting to allow for installation of the pipeline. In areas where shallow bedrock is identified, TGP would use a construction expert to ensure that no other reasonable measures of excavation are possible. TGP submitted a Blasting Plan with additional details regarding measures to be implemented when blasting is necessary. Further information regarding blasting is contained in section B.1.1.1.

6.2 Aboveground Facility Construction

The piping and compressor modifications at TGP's existing Compressor Station 323 would be within the fence line of the existing compressor station. The upstream and downstream tie-in locations would require additional aboveground structures; however, these structures would be minimal, approximately 0.2 acre each, and would be within the existing or proposed new pipeline right-of-way.

During construction, the sites for the aboveground facilities would be cleared of vegetation, as necessary, and graded. Erosion control devices would be installed as needed to prevent erosion and offsite impacts in accordance with TGP's Plan and applicable state permit requirements. Access to the aboveground facilities would be provided by existing public or private roads. After construction, all temporary workspaces would be revegetated in accordance with TGP's Plan. In addition, fencing would be replaced around compressor station facilities for security purposes.

6.3 Construction Schedule and Workforce

TGP would conduct construction activities during daylight hours for 10 hours per day, 6 days per week; however, 24-hour construction activities may occur on a limited basis due to site conditions, specialized construction techniques, and/or weather-related events. Twenty-four-hour activities would be generally limited to the running of water pumps during hydrostatic testing and trenching activities in areas with open-trench timing restrictions.

TGP anticipates construction in early 2017 following the receipt of all applicable regulatory approvals, in order to place the facilities in service in June 2018. All tree clearing would be conducted between September 1 and March 31, with the exception of areas surrounding northern-long eared bat roost trees, which would be cleared between October 1 and March 31.

The construction schedule and duration would vary per site, based on the scope of construction activities. TGP anticipates using one or two mainline construction spreads for the pipeline loop and several small tie-in crews, with some activities taking place concurrently. TGP anticipates a peak construction workforce of approximately 275 individuals. No new permanent employees would be required as a result of the construction, operation, or maintenance of the Project.

6.4 Environmental Inspection and Monitoring

TGP would use at least one full-time environmental inspector (EI) during construction of the Project. The EI would be on site during Project construction activities to ensure compliance with the construction procedures contained in TGP's Plan and Procedures and E&SCP. A full list of the EI's duties is presented in section II.B of TGP's Plan. The EI's responsibilities include:

- ensuring compliance with applicable federal, state, and local environmental permits;

- ordering corrective actions for acts that violate the environmental conditions of the Commission's Certificate, or any other authorizing document;

- ensuring compliance with site-specific construction and restoration plans or other mitigation measures and landowner agreements; and

- maintaining construction status reports.

TGP would conduct environmental training sessions in advance of construction to ensure that all individuals working on the Project are familiar with the environmental mitigation measures appropriate to their jobs and the EI's authority.

As further detailed in section D, we have requested that TGP file update status reports on a biweekly basis until all construction and restoration activities are complete. On request, these status reports would also be provided to other federal and state agencies with permitting responsibilities.

7. PERMITS, APPROVALS, AND REGULATORY CONSULTATIONS

TGP would obtain all necessary federal, state, and local permits, licenses, and clearances related to construction of the proposed facilities. All relevant permits and approvals would be provided to the respective contractors who would be required to be familiar with and adhere to applicable requirements. See table A.7-1 for a list of the permits and approvals required for the Project. TGP would be required to obtain and adhere to all necessary permits regardless of whether they appear in the table or not.

TABLE A.7-1

Federal, State, and Local Permits, Approvals, and Consultations

Permit/Approval	Issuing Agency	Project Status
FEDERAL		
Section 7(c) of the NGA, Certificate of Public Convenience and Necessity	FERC	Application filed on October 9, 2015.
Consultation for Section 7, Endangered Species Act (ESA) and Bald and Golden Eagle Protection Act	U.S. Fish and Wildlife Service (FWS), Pennsylvania Field Office	Consultation completed May 5, 2016.
Migratory Bird Treaty Act consultation	FWS Pennsylvania Field Office	*Migratory Bird Impact Assessment and Conservation Plan* was submitted by TGP on October 28, 2015. Consultation completed May 5, 2016.
Section 404 of the CWA	USACE, Philadelphia District	Application submitted October 1, 2015 and supplemented January 15 and June 16, 2016. Estimated permit issuance October 2016.
STATE – PENNSYLVANIA		
Section 401 of the CWA, Water Quality Certification	Pennsylvania Department of Environmental Protection (PADEP), Northeast Regional Office	Application submitted October 1, 2015 and supplemented June 16, 2016. Estimated permit issuance December 2016.
Water Obstruction and Encroachment Permits, Pennsylvania Code (Pa. Code) Title 25, Chapter 105	PADEP, Northeast Regional Office	Application submitted January 15, 2016 and supplemented June 16, 2016. Estimated permit issuance November 2016.
License to Occupy Submerged Lands, Pa. Code Title 25, Chapter 105	PADEP, Northeast Regional Office	Application submitted January 15, 2016; estimated permit issuance December 2016.
National Pollution Discharge Elimination System (NPDES) – Hydrostatic Test Water Discharge Permit, PAG-10 General Permit authorization for discharges associated with 12.9-mile pipeline	PADEP, Northeast Regional Office	Application submitted July 2016; estimated permit issuance February 2017.
Request for Determination of changes of Minor Significance and Exception from Plan Approval/Operating Permit under Pa. Code §127.14 or §127.449 for Compressor Station 323	PADEP, Northeast Regional Office, Bureau of Air Quality	Request for determination submitted September 29, 2015; response received October 13, 2015.
Erosion and Sediment Control General Permit (ESCGP-2) for Earth Disturbance / NPDES-Stormwater authorization	PADEP, Northeast Regional Office, Bureau of Waterways	Application submitted January 15, 2016 and supplemented June 15, 2016. Estimated permit issuance December 2016.
Highway Occupancy Permit	Pennsylvania Department of Transportation, Engineering District 3-0	Application estimated to be submitted August 2016. Estimated permit issuance December 2016.
State-Listed Threatened and Endangered Species Consultation	Pennsylvania Department of Conservation and Natural Resources (PADCNR), Bureau of Forestry, Ecological Services Section	State-listed plant species survey report was provided to PADCNR on October 2015, and additional information was provided in January 2016. Consultation completed April 28, 2016.
State-Listed Threatened and Endangered Species Consultation	Pennsylvania Game Commission	State-listed species survey report was provided to the Pennsylvania Fish and Boat Commission (PAFBC) in October 2015, and additional information was provided in December 2015. Consultation completed April 20, 2016.

TABLE A.7-1 (cont'd)

Federal, State, and Local Permits, Approvals, and Consultations

Permit/Approval	Issuing Agency	Project Status
State-Listed Threatened and Endangered Species Consultation	PAFBC	State-listed species survey report was provided to PAFBC in October 2015, and additional information was provided in December 2015. Consultation completed April 27, 2016.
Permit to Install Floating Structures and Private Aids to Navigation	PAFBC, Division of Environmental Services	Application estimated to be submitted October 2016.
In-Stream Blasting Permit	PAFBC, Division of Environmental Services	Application estimated to be submitted October 2016.
Permit to Draw Off Water from Impoundments	PAFBC, Division of Environmental Services	Application estimated to be submitted September 2016.
Section 106 of the National Historic Preservation Act consultation	Pennsylvania Historic and Museum Commission (PHMC), Bureau for Historic Preservation / State Historic Preservation Officer	Cultural resource survey report was provided to the PHMC on October 1, 2015, and additional information was provided in February 2016. Consultation completed June 10, 2016.
LOCAL/COUNTY – PENNSYLVANIA		
Erosion and Sedimentation Control Plan review for 4.3-mile pipeline and upstream tie-in location	Wayne County Conservation District	Application was submitted January 15, 2016; estimated permit issuance December 2016.
Erosion and Sedimentation Control Plan review for 8.6-mile pipeline, Compressor Station 323, and downstream tie-in location	Pike County Conservation District	Application was submitted January 15, 2016; estimated permit issuance December 2016.
Act 14 Notification; Township Road Use	Berlin, Lackawaxen, Palmyra, and Texas Townships	Road use notifications sent July 2016; estimated authorization January 2017.
Surface Water Withdrawal Permit	Delaware River Basin Commission	Permit may be required depending upon water final hydrostatic test water withdrawal location.
NATIVE AMERICAN TRIBES		
Native American tribal consultations pursuant to the National Historic Preservation Act, Native American Graves Protection and Reparations Act, Archaeological Resources Protection Act, and several Executive Orders and Executive Memorandums	Delaware Nation	Consultation on-going.
	Absentee-Shawnee Tribe of Oklahoma	Consultation on-going.
	Delaware Tribe of Indians	Consultation on-going.
	St. Regis Mohawk Tribe	Consultation on-going.
	Shawnee Tribe	Consultation on-going.
	Eastern Shawnee Tribe of Oklahoma	Consultation completed May 26, 2016.
	Stockbridge-Munsee Community Band of Mohican Indians	Consultation on-going.

B. ENVIRONMENTAL ANALYSIS

Construction and operation of the Project would have temporary, short-term, long-term, and permanent impacts. As discussed throughout this EA, temporary impacts are defined as occurring only during the construction phase. Short-term impacts are defined as lasting up to 3 years. Long-term impacts would eventually recover, but require more than 3 years. Permanent impacts are defined as lasting throughout the life of the Project.

1. GEOLOGY AND SOILS

1.1 Geology

The pipeline route would intersect the Glaciated Low Plateau Section of the Appalachian Plateaus Province (Pennsylvania Department of Conservation and Natural Resources [PADCNR], 2016a). The Glaciated Low Plateaus consist of rounded hills and broad to narrow valleys. Much of the surficial geologic material is glacial till that was deposited mainly in the valley bottoms and margins. The Project is underlain entirely by the Devonian-aged Catskill Formation, which consists primarily of sedimentary strata including sandstone, siltstone, shale, and conglomerate (U.S. Geological Survey [USGS], 2016). Elevations in the Project area range from approximately 660 to 1,420 feet above mean sea level. Topography in the Project area ranges from nearly level to steep, with average slopes ranging from 0 to 30 percent (U.S. Department of Agriculture NRCS Soil Survey Staff, 2016a and 2016b).

1.1.1 Blasting

Based on an analysis of the NRCS Soil Survey Geographic Database, approximately 36 percent (4.7 miles) of the proposed pipeline route would cross areas with bedrock at depths of less than 60 inches (NRCS Soil Survey Staff, 2016a). All of this bedrock is considered lithic (i.e., hard) and may require blasting or other special construction techniques during pipeline installation.

TGP submitted a blasting plan outlining measures that would be implemented in the event that blasting is required during Project installation. These measures include:

- obtaining any required federal, state, and local blasting approvals;
- notifying nearby landowners prior to blasting activities;
- preparing a site-specific blasting plan for each area where blasting would be required;
- using a third-party blasting inspector to monitor blasting operations; and
- implementing other safety measures to ensure the protection of nearby structures, personnel working in proximity to blasting activities, and sensitive species and resources in the vicinity of the blasting area.

We have reviewed TGP's Blasting Plan and find it acceptable.

1.1.2 Mineral Resources

Based on a review of USGS topographic maps, recent aerial photography, and available federal and state databases, there is one active surface quarry and one quarry with an unknown activity status within 0.5 mile of the Project facilities (Pennsylvania Spatial Data Access, 2016). Both of these mines are over 600 feet from the Project.

There were no oil or gas wells identified within 0.5 mile of the Project and, therefore, no impacts on existing natural gas wells are anticipated as a result of Project construction or operation. Based on distance from the active surface quarries, construction and operation of the Project would not affect the operation of these facilities.

1.1.3 Geologic Hazards

Geologic hazards are natural, physical conditions that can result in damage to land and structures or injury to people. Such hazards typically include seismicity (e.g., earthquakes, surface faults, and soil liquefaction), landslides, flooding, and land subsidence. Conditions necessary for the development of other geologic hazards, including regional subsidence, avalanches, and volcanism, are not present in the Project area. In general, the potential for geologic hazards to significantly affect construction or operation of the Project facilities is low.

Historically, seismicity in the Project area has been very low. The Project does not cross any active faults (USGS, 2006). Soil liquefaction is a phenomenon often associated with seismic activity in which saturated, non-cohesive soils temporarily lose their strength and liquefy when subjected to forces such as intense and prolonged ground shaking. Areas susceptible to liquefaction may include soils that are generally sandy or silty and are generally along rivers, streams, lakes, and shorelines or in areas with shallow groundwater. Soil conditions necessary for liquefaction to occur are likely present in the Project area. However, due to the low potential for a seismic event that would cause strong and prolonged ground shaking, the potential for soil liquefaction to occur is very low. In summary, the seismic hazard for the Project area is low; therefore, impacts from seismic activity are not expected.

Landslides involve the downslope movement of earth materials under a force of gravity due to natural or man-made causes. The risk of landslides in the Project area is "generally low, but includes local areas of high to moderate [risk]" (PADCNR, 2016b). The steepest slopes along the Project route, which would be the most prone to landslides, are from MP 0.1 to 0.2 (10 to 25 percent slope); MP 9.9 to 10.5 (10 to 33 percent slope); and MP 10.8 to 11.4 (10 to 25 percent slope). Landslide hazards would be minimized by siting facilities to avoid loading of slopes to the extent practicable. Where this is not possible, TGP would implement measures to reduce the potential for slope failure and minimize impacts associated with erosion, such as slope breakers and sediment barriers (e.g., hay bales and silt fences). The areas surrounding the remaining Project facilities are categorized as having low landslide susceptibility. The potential for slope failure and erosion during construction would be adequately minimized by TGP implementing the measures in its Plan and Procedures.

The greatest potential for flash flooding to occur in the Project area would be along waterbodies during or after a large storm event with significant precipitation over a short time period. These waterbodies include Swamp Brook (MP 2.4), Tinkwig Creek (MP 4.6), a tributary to West Falls Creek (MP 7.8 and 8.0), Lackawaxen River (MP 10.4), and Lords Creek (MP 12.5). According to the available Federal Emergency Management Agency flood insurance rate maps and the National Flood Hazard Layer data, only the Lackawaxen River crossing is mapped as being in a 100-year flood zone (Federal Emergency Management Agency, 2016). TGP would restore all Project areas to preconstruction contours. No post-construction impacts related to flooding are anticipated.

Land subsidence is the sinking or downward settling of the earth's surface and may be caused by dissolution of bedrock, subsurface mining, or pumping of oil. Karst terrain features such as sinkholes, caves, and caverns can form as a result of the long-term action of groundwater on soluble carbonate rocks (e.g., limestone and dolostone). None of the formations along the proposed pipeline routes contain carbonate rocks; therefore, karst features are not anticipated in the Project area (Weary and Doctor, 2014). There are no subsurface mining operations within 0.5 mile of the Project facilities (Pennsylvania Spatial Data Access, 2016). Because the Project would not be within areas containing carbonate rocks, we conclude that the risk of land subsidence hazards on the Project is low.

1.1.4 Paleontology

The Project area is underlain by Paleozoic sedimentary rocks that have the potential to contain marine fossils. Although fossil specimens may be encountered during construction activities, no impacts on sensitive paleontological resources are anticipated during construction. If unique or significant fossil specimens are discovered during excavation activities, TGP would notify the PADCNR upon discovery.

The overall effect of the Project on topography and geology would be minor, and significant adverse effects on geological resources are not anticipated. Based on the low probability of localized earth movements or geological hazards in the vicinity of the Project, we also do not anticipate impacts attributable to such geological movements or hazards.

1.2 Soils

Construction activities that create soil disturbance, such as clearing, grading, trench excavation, backfilling, and the movement of construction equipment along the right-of-way, would result in temporary, minor impacts on soil resources. Soil characteristics could affect construction performance or increase the potential for adverse construction-related soil impacts. The activities that have the potential to impact soils and reduce soil quality are the mixing topsoil of with subsoil, bringing excess rocks to the surface, compacting soil by heavy equipment, and disrupting surface and subsurface drainage patterns. Table B.1-1 summarizes the soil characteristics in the Project area.

Soils most susceptible to erosion by water are typified by bare or sparse vegetation cover, non-cohesive soil particles with low infiltration rates, and moderate to steep slopes. Approximately 44 percent of the soils that would be affected by construction are considered highly water erodible. None of the soils are highly susceptible to wind erosion.

The U.S. Department of Agriculture defines prime farmland as “land that has the best combination of physical and chemical characteristics for producing food, feed, fiber, and oilseed crops” (NRCS Soil Survey Division Staff, 1993). This designation includes cultivated land, pasture, woodland, or other lands that are either used for food or fiber crops. Areas that are not currently used for agriculture can be designated as prime farmland if they are available for these uses in the future. Urbanized land and open water are excluded from prime farmland. Prime farmland typically contains few or no rocks, is permeable to water and air, is not excessively erodible or saturated with water for long periods, and is not subject to frequent, prolonged flooding during the growing season. Soils that do not meet the above criteria may be considered prime farmland if the limiting factor is mitigated (e.g., artificial drainage). Approximately 7 percent of the soils in the Project area are considered prime farmland.

During construction, topsoil and subsoil would be disturbed during grading and trenching activities and the movement of heavy equipment. The potential mixing of topsoil with the subsoil from these activities could result in a loss of soil fertility, which could potentially affect soils, including residential and agricultural soils. To prevent mixing of the soil horizons, topsoil segregation would be performed in croplands, improved pastures, residential areas, non-saturated wetlands, and in areas requested by the landowner. In upland areas, TGP would strip topsoil from either the full work area or from the trench and subsoil storage area. In non-saturated wetlands, topsoil would only be segregated within the trench line. The topsoil would be segregated and replaced in the proper order during backfilling and final grading. Implementation of proper topsoil segregation would help to ensure post-construction revegetation success, thereby minimizing loss of crop productivity and the potential for long-term erosion problems. Topsoil segregation would also minimize the introduction of subsoil rocks into agricultural topsoil, as further discussed below regarding shallow bedrock and rocky soils. With the implementation of these measures, we conclude that impacts on soils in agricultural and residential areas would be adequately minimized.

There is a potential for construction activities to introduce rock into topsoil during excavation in areas of shallow depth to bedrock. TGP would attempt to use mechanical methods such as a pneumatic ram, ripping, or conventional excavation to excavate through the bedrock, where possible. Rock excavated from the trench may be used to backfill the trench only to the top of the existing bedrock profile. Rock not returned to the trench would be considered construction debris and disposed of appropriately. Excess rock would be removed from at least the top 12 inches of soil in all residential areas, as well as other areas at the landowner's request, to ensure the rock in the area disturbed by construction is similar to adjacent undisturbed areas.

Construction equipment traveling over wet soils could disrupt the soil structure, reduce pore space, increase runoff potential, and cause rutting. The degree of compaction depends on the moisture content and soil texture. Fine-textured soils with poor internal drainage that are moist during construction are the most susceptible to compaction. Approximately 24 percent of the soils that would be affected by the Project are considered prone to compaction. TGP would minimize compaction and rutting impacts during construction in soft or saturated soils by using measures outlined its Plan, Procedures, and E&SCP. Measures such as the use of low-ground-weight equipment and/or by temporary installation of timber equipment mats may be used when soil moisture is high. TGP would test the topsoil and subsoil for compaction in all agricultural and residential areas disturbed by construction. Severely compacted agricultural areas would be mitigated with deep tillage operations during restoration activities using a paraplow or similar implement. In areas where topsoil is segregated, plowing with a paraplow or other deep tillage implement to alleviate subsoil compaction would be conducted before replacement of the topsoil. Soil compaction mitigation would also be performed in severely compacted residential areas.

The clearing and grading of soils with poor revegetation potential could result in a lack of adequate vegetation following construction and restoration of the right-of-way, which could lead to increased erosion, a reduction in wildlife habitat, and adverse visual impacts. Approximately 45 percent of the soils that would be affected by the Project are considered to have revegetation concerns. TGP would restore and revegetate according to its Plan and E&SCP, which includes specifications for applying soil amendments, working with local soil conservation authorities or other agencies to obtain seed mixture recommendations, and post-construction monitoring to ensure the effectiveness of revegetation and permanent erosion control devices during facility operation.

To minimize or prevent potential impacts due to soil erosion and sedimentation during construction, TGP would utilize the erosion and sedimentation controls outlined its Plan, Procedures, and E&SCP. Erosion control devices would be maintained until the right-of-way is successfully revegetated. Temporary erosion controls, including slope breakers and sediment barriers (e.g., hay bales and silt fences), would be installed following initial ground disturbance to control runoff and prevent sediment transport off the construction right-of-way. Temporary erosion controls would be maintained until the Project area is successfully revegetated. During construction, the effectiveness of these temporary erosion control devices would be monitored by TGP's EIs. Following successful revegetation of construction areas, temporary erosion control devices would be removed. Permanent erosion controls would be installed, as necessary, to ensure the successful restoration of the Project area. The effectiveness of revegetation and permanent erosion control devices would be monitored by operating personnel during the long-term operation and maintenance of the Project facilities in accordance with the provisions in TGP's Plan. With the implementation of these measures, we conclude that impacts would be adequately minimized in areas with poor revegetation potential.

TABLE B.1-1

Summary of Soil Characteristics in the Project Area (in acres)

Facility	Total Acres [a]	Prime Farmland [b]	Highly Erodible		Compaction Prone [e]	Revegetation Concerns [f]	Shallow Bedrock [g]	Rocky Soils [h]
			Water [c]	Wind [d]				
PIPELINE FACILITIES								
Loops 322 and 323	186.7	11.5	95.0	0.0	26.8	94.5	59.0	179.8
ANCILLARY FACILITIES								
Access Roads	16.0	1.1	6.7	0.0	1.0	6.7	5.5	15.4
Contractor/Pipe Yards/Staging Areas	59.5	6.4	14.1	0.0	34.8	17.0	2.5	59.4
ABOVEGROUND FACILITIES								
Compressor Station 323 Modifications	<0.1	0.0	<0.1	0.0	0.0	<0.1	0.0	<0.1
Upstream Tie-In Site	0.2	0.1	0.1	0.0	0.0	0.1	0.0	0.2
Downstream Tie-In Site	0.2	0.0	<0.1	0.0	0.0	<0.1	0.0	0.2
PROJECT TOTAL	**262.6**	**19.1**	**115.9**	**0.0**	**62.6**	**118.3**	**67.0**	**255.0**

Sources: NRCS Soil Survey Staff, 2016a and 2016b

[a] Values within rows do not add up to the totals listed for each facility because soils may occur in more than one characteristic class or may not occur in any class listed in the table.

[b] As designated by the NRCS.

[c] Includes land in capability subclasses IVe through VIIe and soils with an average slope greater than or equal to 9 percent.

[d] Includes soils in wind erodibility groups 1 and 2.

[e] Includes soils in somewhat poor, poor, and very poor drainage classes with surface textures of sandy clay loam or finer.

[f] Includes coarse-textured soils (sandy loams and coarser) that are moderately well to excessively drained.

[g] Soils identified as containing bedrock within 60 inches of the soil surface. All bedrock identified is lithic and could require blasting.

[h] Soils with one or more horizons that have a cobbley, stony, bouldery, channery, flaggy, very gravelly, or extremely gravelly modifier to the textural class and/or contain greater than 5 percent by weight rocks larger than 3 inches.

Contamination from spills or leaks of fuels, lubricants, and coolant from construction equipment could adversely affect soils. However, the impacts of such contamination are typically minor because of the low frequency and volumes of spills and leaks. Measures outlined in TGP's SPCC Plan would be implemented to reduce potential impacts on soils from spills of the hazardous materials used during construction. These measures include regularly inspecting equipment to ensure it is in good working order, properly training employees regarding the handling of fuels and other hazardous materials, implementing appropriate clean-up protocols, and promptly reporting any spills to the appropriate agencies. We have reviewed TGP's SPCC Plan and find it acceptable.

Implementation of the measures outlined in TGP's Plan, Procedures, and E&SCP would minimize soil impacts and ensure effective revegetation of disturbed areas. Further, TGP would implement its SPCC Plan to reduce the potential impacts on soils from spills of hazardous materials used during construction and manage contaminated soils should they be encountered. Given the impact minimization and mitigation measures described above, we conclude that soils would not be significantly affected by Project construction and operation.

1.3 Groundwater Resources

The Project is in the Delaware River Basin, Upper Region, along the boundary of the East-West Branch and Lackawaxen Watersheds (Delaware River Basin Commission, 2015). The Project area is characterized by rounded hills and narrow valleys and is generally underlain by shallow bedrock that forms the hills and unconsolidated glacial till or sand and gravel deposits, which exist throughout the area

but primarily in the valley bottoms and margins (PADCNR, 2014a and 2014b). Unconsolidated sediments having significant porosity and permeability, mainly sand and gravel, make some of the best aquifers in Pennsylvania that produce large amounts of water. These aquifers are limited mostly to major stream valleys, especially those that drain areas that were covered by glaciers during the Ice Age (Fleeger, 1999).

The U.S. Environmental Protection Agency (EPA) defines Sole Source or Principal Source Aquifers as those aquifers which supply at least 50 percent of the drinking water consumed in the area overlying the aquifer. These areas typically have no alternative drinking water source(s) that could be physically, legally, and/or economically supplied to all those who depend on the aquifer for their potable water supply (EPA, 2015a). The nearest sole source aquifer is the Delaware River Streamflow Zone associated with the New Jersey Coastal Plains Sole Source Aquifer. A portion of the Project from approximately MP 12.3 to MP 12.9 would be within the Delaware River Streamflow Zone (EPA, 2016). Due to the close proximity, the Project has the potential to affect this sole-source aquifer. TGP would implement best management practices (BMP) detailed in the Project Plan and Procedures to minimize erosion and runoff that may impact surface water upstream of the sole source aquifer. TGP has prepared an SPCC Plan, which would be followed in the event of a spill to minimize the potential for contaminants from reaching surface waters that may drain to the sole source aquifer. With proper implementation of these mitigation measures, we conclude that the Project is unlikely to affect the New Jersey Coastal Plains Sole Source Aquifer.

Water supply wells within the vicinity of the Project were identified based on field surveys and a review of data provided by Pennsylvania agencies and databases. A total of 10 wells were identified within 150 feet of the Project workspaces and are identified in table B.1-2. All 10 wells were identified as domestic wells: no public water supply wells or wellhead protection areas were identified. Six of these wells are within the pipeline workspace, and four of them are within pipe yards, the compressor station temporary workspace, or in proximity to access roads. One of the wells within the proposed workspace is unavoidable, given the proposed alignment. TGP has committed to provide a temporary source of drinking water for the well owner and arrange for the installation of a new well or other permanent source of water (e.g., municipal supply), at TGP's cost following construction. For the well within the compressor station temporary workspace, the wells in proximity to pipe yards, and the well in proximity to the access road, TGP would flag/identify the wells and avoid impacts to the extent possible.

TGP would also offer pre- and post-construction well water testing on all wells within 150 feet of the pipeline construction workspace to document water quality and flow and to establish a baseline for comparison in the event of inadvertent construction impacts. In addition, all wells within 200 feet of any required blasting activities would be monitored by a third-party blasting monitor licensed by the State of Pennsylvania. If testing were to reveal that impacts on nearby wells occurred as a result of construction, then TGP would provide an alternate source of water and/or other appropriate compensation to the landowner.

Construction activities are not likely to result in significant impacts on groundwater resources because the majority of construction would involve shallow, temporary, and localized excavation. Trench excavation could intersect the water table in low-lying areas where groundwater is near the surface (e.g., wetlands), but in general, the depth to groundwater would be below the excavated trench. Groundwater resources could also be temporarily affected due to changes in overland water flow and recharge caused by clearing and grading of the Project right-of-way. In addition, near-surface soil compaction caused by heavy construction vehicles could reduce the soil's ability to absorb water in these isolated areas. During construction, local water table elevations could be affected by trenching and backfilling, which could temporarily affect wells near the construction area. TGP may use groundwater as a hydrostatic test water source, which would also temporarily affect local groundwater resources. All measures contained in

required local and/or state permits would be followed if this should be necessary. In these instances where trench dewatering would be required or where groundwater would be used as a hydrostatic test water source, all trench water and/or hydrostatic test water would be discharged into well-vegetated upland areas to allow the water to infiltrate back into the ground in compliance with all relevant permits, thereby minimizing any long-term impacts on the water table.

TABLE B.1-2

Public and Private Water Supply Wells Within 150 Feet of the Proposed Facilities [a]

Facility	Milepost	Township	Approximate Distance (feet) from Centerline	Approximate Distance (feet) from Construction Work Area	Well Type [b]
PIPELINE FACILITIES					
	1.30	Berlin	87	55	Domestic
	6.72	Lackawaxen	14	0	Domestic
	7.00	Lackawaxen	189	120	Domestic
	7.59	Lackawaxen	230	138	Domestic
	8.00	Lackawaxen	158	71	Domestic
	8.05	Lackawaxen	230	150	Domestic
PIPE/CONTRACTOR YARDS					
Pipe Yard No. 1	N/A	Berlin	N/A	0	Domestic
Pipe Yard No. 3	N/A	Palmyra	N/A	80	Domestic
ABOVEGROUND FACILITIES					
Compressor Station 323	N/A	Lackawaxen	N/A	0	Domestic
ACCESS ROADS					
TAR-2	N/A	Berlin	225	68	Domestic

TAR = temporary access road; N/A = not applicable

Sources: Data from Project Civil Survey Crew and Project Land Group (PADCNR, 2015).

[a] Search of public and private wells within 150 feet of the Project using civil surveys, PADCNR Pennsylvania Groundwater Information System (PaGWIS) database, and landowner discussions.

[b] All wells identified were private: no public wells were identified.

The disturbance of soils along the trench line would offer a preferential path for groundwater movement, resulting in changes to permanent flow patterns. However, in accordance with TGP's Procedures, permanent trench plugs would be installed at regular intervals within the trench to deter groundwater movement along the trench line.

The direct and indirect impacts described above would be temporary and would not significantly affect groundwater resources. Impacts would be avoided or minimized by the use of construction techniques contained in TGP's Plan and Procedures (e.g., temporary and permanent trench plugs), which incorporate the measures in the Commission's Plan. Upon completion of construction, TGP would restore the ground surface as closely as practicable to original contours and revegetate the right-of-way to facilitate restoration of preconstruction overland flow and recharge patterns.

Regulatory databases were reviewed to identify known hazardous waste sites that could interfere with the construction of the Project. Disturbance of contaminated soils could release and expose hazardous chemicals bound within the soil that could then reach surface waterbodies and/or groundwater. A review of the Drinking Water Reporting System maintained by the Pennsylvania Department of Environmental Protection (PADEP) did not identify any contaminated community drinking water sources within the Project area (Berlin, Palmyra, or Lackawaxen Townships, Pennsylvania). A database review identified one hazardous waste cleanup area (Crown Industries site in Lackawaxen Township, Pike County) approximately 0.75 mile from the Project area. This site has been remediated under several

cleanup actions by PADEP, and the source of contamination has been removed. However, the groundwater at the site remains contaminated with tetrachloroethylene, trichloroethylene, and other volatile organic compounds (VOCs) that are slowly degrading over time. While the potential exists for encountering contaminated groundwater in the vicinity of this site, the contamination would be unlikely to pose a health risk during construction activities based on the regulatory status of the site.

There are 11 recorded incidents of leaking underground storage tanks in Berlin, Palmyra, and Lackawaxen Townships. Of these 11 reported incidents, 5 sites have had cleanup completed; 5 sites are listed as inactive, which means that the sites have not yet reached a cleanup completed status but have been deemed a low priority for corrective action by PADEP; and the final site has had interim or remedial action initiated. Additional database review indicates no records of active or historic solid or hazardous waste facilities, spills, or petroleum/chemical storage sites occurring in the general Project area (PADEP, 2015; EPA, 2011 and 2015b). Therefore, the Project is not likely to disturb contaminated soils or sediments.

Inadvertent surface spills of hazardous materials used during construction could contaminate shallow groundwater. To minimize the potential impacts associated with inadvertent spills, TGP has prepared an acceptable SPCC Plan. The plan includes measures designed to prevent hazardous materials from reaching groundwater, such as scheduling equipment and vehicle inspections to identify leaks, storing fuels within secondary containment structures, and refueling equipment at least 100 feet away from waterbodies and wells. In the event that a spill should occur, the plans identify appropriate actions that would be taken to remediate, clean up, and report the spill.

Based on TGP's proposed construction techniques and the implementation of minimization and mitigation measures, we conclude that construction and operation of the Project would not significantly affect groundwater resources proximate to the Project area.

2. WATER RESOURCES AND WETLANDS

2.1 Surface Water Resources

The Project would cross 31 waterbodies: 19 perennial, 5 intermittent, 6 ephemeral, and 1 flowing ditch. One ephemeral stream crosses under proposed temporary access road 6 through an existing culvert. The flowing ditch makes up the eastern most edge of the ATWS associated with the dry crossing of the Lackawaxen River and would be avoided by construction activities. Because no impacts are anticipated for these two features and no modifications are proposed, they are not discussed further. No waterbodies would be affected by the construction of any aboveground facilities. Table 1 of appendix B provides details regarding the waterbodies crossed by the Project.

TGP would cross the majority of the waterbodies using a dry crossing method, an open cut (when flow is not perceptible as described in section A.6.1.6), or as part of a temporary road crossing. TGP is proposing to cross one stream using an open cut (wet) crossing method. Table 1 of appendix B details the stream crossing method proposed for each waterbody. Streams described as crossed via temporary road crossings would not be not crossed by the pipeline itself; they would be crossed by construction equipment on the right-of-way. Therefore, no in-stream pipeline construction would occur in these areas.

TGP would use clean gravel or native cobbles for the upper 1 foot of trench backfill in all waterbodies classified as coldwater fisheries, which are the majority of streams crossed by the pipeline loops. In accordance with TGP's Procedures, the streambanks would be reestablished to preconstruction contours and stabilized with an erosion control fabric or similar product. Erosion and sediment control measures would be installed across the right-of-way to reduce streambank and upland erosion and

sediment transport into the waterbody, and streambanks would be seeded with an approved seed mixture. A buffer at least 25 feet wide adjacent to waterbodies would be revegetated to preconstruction conditions over the entire width of the right-of-way, except for a 10-foot-wide strip centered over the pipeline that may be periodically mowed and maintained in an herbaceous state so that shrubs and trees cannot reestablish themselves. In addition, trees would not be allowed to grow within 15 feet of the pipeline.

No Pennsylvania Scenic Rivers are in the vicinity of the Project (PADCNR 2015b). However, the Project is approximately 1.5 miles from the Delaware River, which is a Federal Scenic River (PADCNR, 2015b).

Tennessee consulted the PADEP eMapPA mapping program to identify existing surface water withdrawals or intake structures within 3 miles of the Project (PADEP, 2015i). Surface water withdrawals and intake structures identified via the mapping program are not limited to drinking water and include water used in industrial, agricultural, and other uses. Two existing surface water withdrawals and intake structures were identified within 3 miles of the Project (table B.2-1).

TABLE B.2-1

Existing Surface Water Withdrawals and Intake Structures Within Three Miles of Project

Site Name	Approximate Distance from Centerline	Direction from Centerline	Downstream
Lackawaxen River	2.90 miles	SW	Yes
Unnamed Pond	1.46 miles	S	Yes

TGP would also monitor the progress of restoration at these crossings for 3 years or until restoration is successful, and would take additional restoration measures if necessary. Riparian cover on affected streambanks would be expected to recover over several months to several years. Erosion controls would be maintained and monitored throughout restoration and removed once restoration is deemed successful.

TGP has indicated that the Pennsylvania Fish and Boat Commission (PAFBC) has requested instream work in designated trout waters occur during the following time windows except as required to install or remove equipment bridges:

1. Natural Reproducing Wild Trout Streams – January 1 through September 30; and
2. Trout Stocked Fisheries and Approved Trout Waters – June 16 through February 28.

Section V.B.1a in FERC's Procedures requires that instream work occur in coldwater fisheries between June 1 and September 30 unless otherwise required by another agency. As such, TGP would be required to adhere to the time windows indicated above when crossing certain designated trout fisheries.

Impacts on surface water resources from Project construction would depend on a number of factors, including the size of the waterbody, flow at the time of crossing, duration, and streambed composition. The greatest potential impacts would likely result from an increase in sediment loading and turbidity. These impacts would primarily result from clearing and grading of streambanks, trench dewatering, installation of flume pipes or construction of dams, the loosening of the streambed soil from trenching and subsequent backfilling, as well as silt-laden runoff from the general right-of-way.

FERC's Procedures require that extra work areas would be at least 50 feet away from the water's edge and/or wetland boundaries, unless site-specific justification warrants these alternative measures. TGP has requested 10 extra work areas within 50 feet of the edge of a waterbody or the boundary of a wetland. The work area locations and site-specific justifications for the work areas as alternate measures from FERC's Procedures are provided in table B.2-2.

We have reviewed each of these locations and the site-specific justifications provided by TGP and find them to be acceptable. The FERC Procedures require that TGP install sediment barriers along the edge of the workspace to contain spoil within the area of disturbance and to maintain the sediment barrier until restoration and stabilization of the disturbed area is complete. The appropriate implementation of erosion control measures in these locations would provide adequate protection for the adjacent resource.

Construction-related impacts would be limited primarily to short periods of increased turbidity before installation of the pipeline, during the installation of any upstream and downstream dams, and following installation of the pipeline when dams are pulled and flow across the restored work area is reestablished. We conclude that if completed in accordance with the construction and restoration methods described above and in TGP's Plan, Procedures, and E&SCP, impacts on waterbodies would be minor and temporary.

We received comments from a landowner who expressed concerns regarding surface water quality issues, including sedimentation, from previous TGP pipeline construction activities. We acknowledge that there were construction deficiencies during TGP's construction of the 300 Line Project which led to waterbody impacts. These deficiencies resulted in violations of Pennsylvania's Clean Streams Law and a fine from the PADEP. TGP has committed to following Project Procedures for work in wetlands and waterbodies, and would be required to obtain permits from PADEP and the USACE for work in waterbodies. While some impacts on water quality during pipeline construction and restoration activities would be anticipated, the required permits and procedures would minimize the potential for significant impacts. In the event that TGP does not follow these requirements, they would be subject to enforcement action from the PADEP, USACE, and the Commission. We find that these regulatory programs provide sufficient protection of these resources to ensure that construction and operation of the Project would not result in significant environmental impact. Additionally, we have included a condition in section B.4.1 requiring TGP to implement a Project-specific environmental complaint resolution procedure, which would provide landowners with information about how to identify and resolve environmental mitigation problems/concerns during construction of the Project and how to contact FERC in the event that they are not satisfied with TGP's response.

We also received comments from the NPS with concerns related to potential changes in water quality associated with a proposed open trench (wet) crossing of the Lackawaxen River due to its proximity to the Upper Delaware Scenic and Recreational River. TGP is proposing to cross the Lackawaxen River approximately 3 miles upstream of the portion of the Upper Delaware River classified as a Wild and Scenic River under the Wild and Scenic Rivers Act. The NPS, in a comment letter dated November 16, 2015, expressed that the NPS, Upper Delaware Scenic and Recreational River, intends to review the Orion Project under Section 7(a) of the Wild and Scenic Rivers Act.

Pursuant to Section 7(a) of the Act, *"No department or agency of the United States shall recommend authorization of any water resources project that would have a direct and adverse effect on the values for which such river was established."* In evaluating the potential impacts on a National Wild and Scenic River from a proposed project, the NPS considers the following factors – free flow, water quality, and "Outstandingly Remarkable Values" (ORVs). ORVs constitute those values for which the river was designated into the Wild and Scenic Rivers System. Crossing of Lackawaxen River would require a USACE Section 404 permit, which would trigger NPS review of the permits under Section 7 of the Wild and Scenic Rivers Act. Under this statute, the NPS would determine if such crossings would have a direct and adverse impact on free flow and water quality, as well as any direct and adverse impacts to any ORVs that led to the designation into the Wild and Scenic Rivers System.

TABLE B.2-2

Additional Temporary Workspaces Within 50 Feet of a Wetland or Waterbody

Pipeline Loop Milepost	Name of Feature or Field ID [a]	Description [b]	Site-Specific Justification for Alternate Measure
0.13	W1a	ATWS on north and west side of W1a has no buffer (0 feet) from wetland boundary.	Extra workspace is required to safely bore under the road and account for the steeply sloped terrain on both sides of the road crossing.
0.22	S4a	ATWS on west side of stream S4a has 36-foot-wide buffer to stream boundary.	Extra workspace is required to safely open cut the road and account for the steeply sloped terrain on the stream side of the crossing.
3.90	W20a	ATWS has no buffer (0 feet) between workspace and wetland W3.	The construction right-of-way width has been increased by 10 feet through wetland W20a to provide the space necessary to segregate the saturated soils.
4.31	W19a	ATWS on south side of W19a has 22-foot-wide buffer to wetland boundary.	ATWS has been identified along an existing access road in the event the pond is accessed as a water source. No tree clearing or earth disturbance would occur in this area.
6.50	W11b	ATWS has no buffer (0 feet) between workspace and wetland W11b.	The construction right-of-way width has been increased by 10 feet through wetland W11b to provide the space necessary to segregate the saturated soils. In order to avoid a cultural resource site (bore under) and create a 75-foot protective buffer, a bore pit has been located immediately adjacent to the wetland.
6.94	W20b / S18b	ATWS on south side of W20b and stream S18b has 18-foot-wide to 26-foot-wide buffer to wetland/stream boundary.	ATWS has been added within the existing right-of-way to facilitate the wetland and stream crossing.
8.20	W24b / S22b	ATWS on west side of W24b and stream S22b has 0-foot-wide to 33-foot-wide buffer to wetland/stream boundary.	The existing compressor station property has been identified as ATWS if required. No additional clearing/grading would occur in this area.
10.40	W39a	ATWS on north side of W39a has 31-foot-wide buffer to wetland boundary.	ATWS is required to safely bore under the road and provide the space necessary to accommodate the dry crossing of the Lackawaxen River.
10.40	S22a	ATWS has no buffer (0 feet) between workspace and Lackawaxen River.	ATWS is required for the crossing of the Lackawaxen River
10.40	S23a / S1x	ATWS has no buffer (0 feet) between workspace and O'Donnell Creek.	ATWS has been identified in the event that the dewatering associated with the crossing of the Lackawaxen River requires more space to accommodate filter bags and /or temporary storage tanks. No tree clearing or earth disturbance would occur in this area.

W = wetland; S = stream or waterbody.

[a] Field ID number corresponds to identification number in the Project alignment sheets, issued 1/22/2016.

[b] Data are based on field surveys completed for the Project, and are depicted on the alignment sheets.

[c] Milepost references in the pipeline loops correspond to the new 36-inch-diameter pipeline lateral, Line 300-3.

TGP originally proposed an open trench (wet) crossing of the Lackawaxen River. Since the filing of its original application, TGP has coordinated with the PADEP and the USACE to revise its crossing plan for the Lackawaxen River utilizing a cofferdam, which is a dry-crossing method. This crossing method involves the installation of a cofferdam to isolate and divert flow around the work area in two phases, and is described in further detail in section A.6.1.6. Although TGP's on-site investigations and flow analysis support a cofferdam crossing of the Lackawaxen River, the potential exists that conditions at the time of construction may not support the use of this method. Therefore, TGP has identified that in the event that a cofferdam crossing could not be implemented, an open cut (wet) crossing method would be used. Should TGP determine that a wet open cut crossing is necessary, it would need to file for all regulatory approvals, including applicable permits from the USACE and the NPS, and would need to request authorization for the proposed change with FERC, following FERC's established procedures for evaluating and processing variance requests.

2.2 Hydrostatic Test Water

TGP would be required to hydrostatically test all pipe in accordance with DOT specifications and the pipeline safety regulations identified in the Federal Safety Standards of the Office of Pipeline Safety (49 CFR 192). The process is generally carried out after backfilling and completion of other construction activities. Hydrostatic testing is a process in which a pipeline is filled with water and pressurized above its maximum allowable operating pressure in order to test for leaks and ensure the integrity of pipeline facilities prior to operation. The pressure in the pipeline is then monitored for several hours. If a drop in pressure is recorded, TGP would examine the pipelines to determine if any leaks have occurred. After each test, the hydrostatic test water would be discharged into well-vegetated upland areas using an energy dissipation device to reduce impacts on soil erosion in accordance with TGP's Procedures. TGP would obtain water for hydrostatic testing from an off-site surface water location (listed in table B.2-3 below), a municipal water source, or groundwater, and truck the water to the test site location. To the maximum extent practicable, TGP would transfer hydrostatic test water from one test section to the next to reduce the total volume of water required.

As indicated in TGP's Procedures, prior to water withdrawal, TGP would notify appropriate state agencies at least 48 hours prior to testing, inspect all pipeline welds prior to hydrostatic testing, and locate test manifolds outside of wetland and riparian areas where practicable. During testing, TGP would screen intake hoses to prevent fish entrainment, maintain adequate flow rates, keep pumps at least 100 feet from any wetland or waterbody, and implement secondary containment and refueling per TGP's SPCC plan. Following completion of hydrostatic testing, the test water would be discharged into an energy dissipation device and directed into a temporary filter basin constructed of silt fence and/or straw bales in a well-vegetated area. The energy dissipation device would reduce the velocity of the discharged water, thereby reducing the potential for erosion and sedimentation.

TABLE B.2-3

Hydrostatic Test Water Volumes and Sources

Pipe Test Section	Source [a]	Volume of Water (gallons)
Loop 322 and Loop 323		
0.00 – 1.40	Surface, Municipal, and/or Groundwater	369,000
1.40 – 6.30	Surface, Municipal, and/or Groundwater	1,310,000
6.30 – 7.16	Surface, Municipal, and/or Groundwater	227,000
7.16 – 7.43	Surface, Municipal, and/or Groundwater	72,000
7.43 – 9.80	Surface, Municipal, and/or Groundwater	627,000
9.80 – 10.32	Surface, Municipal, and/or Groundwater	142,000
10.32 – 11.03	Surface, Municipal, and/or Groundwater	192,000
11.03 – 12.91	Surface, Municipal, and/or Groundwater	503,000
TOTAL		**3,442,000**

Note: All or a portion of hydrostatic test water may be discharged at any of the following mileposts: 0.0, 0.46, or 9.80.

[a] Potential surface water sources include: Lackawaxen River Bridge locations No. 1 and No. 2, Corilla Lake, Tinkwig Lake, Lackawaxen River, municipal sources, and groundwater wells. If it is determined that flow rate in the waterbody is inadequate for water withdrawal, an alternate source location with adequate flow rates or municipal sources would be used.

Table B.2-3 identifies the hydrostatic test segments, volumes of water that would be needed for each hydrostatic test, and discharge locations. As stated earlier, TGP would obtain all applicable permits for the withdrawal and discharge of any hydrostatic test water. In addition, necessary approvals would be obtained from the Delaware River Basin Commission, which regulates withdrawals of 100,000 gallons per day or more averaged over a 30-day period, and the discharge of 10,000 gallons per day within the Delaware River Basin. Accordingly, TGP would keep hydrostatic test water withdrawal and discharge below the permit levels/thresholds established by the Delaware River Basin Commission. TGP does not anticipate the use of any additives, but should additives be required, TGP would submit details to the PADEP for review and approval of any chemicals proposed for use. Given that TGP would discharge to uplands and adhere to all permit requirements, such as the use of erosion control measures, impacts on waterbodies are expected to be temporary and minor.

2.3 Wetlands

Wetlands are areas that are inundated or saturated by surface or groundwater at a frequency and duration sufficient to support a prevalence of wetland vegetation adapted for life in saturated soil conditions. Wetlands can be a source of substantial biodiversity and serve a variety of functions that include naturally improving water quality and providing wildlife habitat, recreational opportunities, and flood control.

TGP conducted field delineation surveys to determine the presence of wetlands within Project workspaces. The surveys determined that 65 wetlands would be within the Project workspace, including pipeline workspace, ATWS, pipe yards, and access roads. No wetlands would be affected by aboveground facilities. Table 2 in appendix B provides a summary of wetlands crossed by the Project, as well as associated impacts.

TGP would reduce the width of the construction right-of-way at all wetland crossings to no greater than 75 feet wide (with three approved exceptions, discussed below). Construction of the Project would affect a total of 19.13 acres of wetlands (8.34 acres of palustrine emergent wetland [PEM], 4.49 acres of palustrine scrub-shrub wetland [PSS], and 6.30 acres of palustrine forested wetland [PFO]), of which 6.76 acres of impacts (3.47 acres of PEM, 1.84 acres of PSS, and 1.46 acres of PFO) would

occur within the temporary construction workspace. Wetlands within the temporary workspace would be allowed to return to their preconstruction condition following restoration.

There would be no net loss of wetlands. However, approximately 1.45 acres of PSS wetlands and 3.48 acres of PFO wetlands within the new proposed permanent right-of-way would be converted to emergent wetland following construction. An additional 4.88 acres of PEM wetlands would fall within the permanent right-of-way; however, these wetlands would return to their original wetland type following restoration.

TGP would construct pipeline segments through wetlands in accordance with its Procedures and state and federal permit requirements. If wetland soils are non-saturated at the time of construction and able to support construction equipment, TGP would use standard pipeline construction techniques. If soils are saturated, TGP would construct a temporary travel lane to support equipment that would be fully removed following construction. To preserve natural seed stock and increase revegetation potential, TGP would segregate up to 12 inches of topsoil during trenching and return it to the trench during backfilling after replacing the subsoil. Erosion controls consisting of silt fence and/or stacked hay bales would be installed at wetland boundaries to prevent sedimentation from adjacent upland areas.

TGP would ensure that construction-related impacts on wetlands are kept to a minimum and would adhere to the following wetland crossing procedures:

- Vegetation would be cut off at ground level, leaving existing root systems intact, and the cut vegetation would be removed from the wetlands for disposal. Vegetation disturbance would be kept to a minimum whenever possible.
- Pulling of tree stumps and grading activities would be limited to that area directly over the trench, and to a lesser extent, to the work or travel area. Where, in the judgment of the Chief Inspector or EI, construction safety would be compromised, stumps would be pulled in the workspace outside of the trench line.
- Tennessee would attempt to use no more than two layers of timber rip-rap or prefabricated timber mats within the work area to stabilize the right-of-way.
- All corduroy pads, prefabricated equipment pads, and geotextile fabric overlain with gravel would be removed upon completion of construction.
- The top 12 inches of topsoil from the trench would be segregated and then returned to its original position on top of the trench, except in areas where tree roots and stumps, standing water, or saturated soils prevent this.
- Sediment barriers would be installed and maintained at the edge of all wetlands until upslope right-of-way revegetation is completed. Permanent slope breakers would be installed at the base of all slopes adjacent to wetlands.
- Permanent trench breakers would be installed at the point where the trench enters and exits the wetland to help preserve the wetland's hydrologic characteristics and to control sediment discharges into the wetlands.
- Backfilling of the trench within the wetlands would be performed in such a manner that excess backfill would be removed from the right-of-way and wetlands would be returned, to the extent possible, to original contours and flow patterns. Drainage ditches, terraces, roads, and fences would be restored to their former condition.

The primary impacts of Project construction on wetlands would be the alteration of wetland vegetation due to clearing and the mixing of topsoil and subsoil from rutting, excavation, and compaction. Construction could also affect water quality within the wetland due to sediment loading or inadvertent spills of fuel or chemicals. In general, TGP would minimize wetland impacts by co-locating the proposed loop with its existing 300 Line and by implementing the measures outlined in its Procedures and SPCC Plan. Because the construction right-of-way would overlap a portion of the existing permanent right-of-way, the new permanent right-of-way requirements are minimized.

Impacts on wetlands would be greatest during and immediately following construction. Most of these effects would be short term in nature and would diminish as wetland functionality recovers and eventually reaches preconstruction conditions. Wetlands affected within the temporary workspace would be allowed to revert to preconstruction conditions following completion of construction. Vegetation within emergent wetlands would regenerate quickly (typically within 1 to 3 years). Because these areas are naturally open and herbaceous, there would be little to no permanent impacts on emergent wetlands. Impacts on scrub-shrub and forested wetlands would last longer than those on emergent wetlands. Woody vegetation may take several years to regenerate to its original density. Furthermore, annual maintenance of a 10-foot-wide herbaceous strip centered over the pipeline and removal of trees taller than 15 feet within 15 feet of the pipeline centerline would result in a long-term impact by converting previously forested wetland areas to emergent wetland areas.

Although construction would result in some long-term conversion of wetland habitat (less than 5 acres), TGP would minimize these impacts by locating the construction right-of-way to overlap a portion of its existing 300 Line permanent right-of-way. The location of the construction right-of-way would limit long-term impacts on wetlands, resulting in the permanent conversion of 3.48 acres of forested wetlands to emergent or scrub/shrub wetlands, and the permanent conversion of 1.45 acre of scrub-shrub wetlands to emergent wetlands.

FERC's Procedures require that all ATWS must be set back at least 50 feet from wetlands and that construction right-of-way width be reduced to 75 feet in wetlands unless conditions warrant modification of these requirements and the applicant provides site-specific justification for why they cannot be met (see FERC's Procedures sections VI.A and VI.B). TGP has identified five wetland crossings that would require the use of ATWS within 50 feet of a wetland boundary, one wetland crossing that would require a construction right-of-way width greater than 75 feet, and two wetland crossings that would require both ATWS within 50 feet and widths greater than 75 feet. The location of these areas and site-specific justifications are provided in table B.2-2.

In addition to the placement of ATWS within 50 feet of wetlands W1a, W20a, W19a, W11b, W20b, W24b, and W39a, and expanded construction right-of-way width for wetland crossings W20a, W11b, and W30a, TGP has requested two additional modifications to FERC's Procedures regarding wetlands (see FERC's Procedures section VI.C):

1. Permanent slope breakers could not be installed at wetland boundaries if the permanent slope breakers could alter the wetland characteristics. TGP would use temporary slope breakers (straw/hay bales) at wetland boundaries until restoration is complete.

2. TGP would restore wetlands using seed and mulch as required by Pennsylvania agencies or as recommended by the County Conservation District Offices.

We have reviewed these measures and find that they are consistent with the level of resource protection provided by the FERC Procedures; and as such, we find that TGP has provided sufficient justification for these alternative measures. The alternate measures identified in table B.2-2 are consistent with the intent of FERC's Procedures.

TGP completed mitigation planting as part of wetland impact mitigation associated with the Northeast Upgrade Project (NEUP) and 300 Line Projects. Construction of the Orion Project may temporarily impact a portion of these planted mitigation areas. Any impacts on planted mitigation areas resulting from the Orion Project would be discussed with the agencies and accounted for in the Project permit applications and mitigation requirements associated with the Project. Discussions between TGP and the landowner and the Delaware Highlands Conservancy regarding the Project crossing and potential mitigation are ongoing. To ensure impacts on established wetland mitigation areas are minimized, **we recommend that:**

- **<u>Prior to construction</u>, TGP should file with the Secretary of the Commission (Secretary) updated information regarding how wetland mitigation areas established as part of the NEUP and 300 Line Projects could be impacted by the Orion Project. TGP's filing should include correspondence between TGP and the landowner, the Delaware Highlands Conservancy, and the USACE, as appropriate; and should discuss measures that would minimize impacts on these mitigation areas**.

TGP is currently working with the PADEP and the USACE to develop an appropriate mitigation plan (including long-term restoration) to offset the permanent conversion impacts on forested/scrub-shrub wetlands. TGP has developed a conceptual plan that would focus mitigation efforts on the Lackawaxen Watershed.

Based on the measures included in TGP's Procedures, and the mitigation and restoration measures proposed by TGP, we conclude that wetland impacts associated with the construction and operation of the Project would be sufficiently minimized and do not represent a significant impact on these resources.

3. VEGETATION, WILDLIFE, AND FISHERIES

3.1 Vegetation

The Project area consists of upland forests, agricultural lands, open lands, wetlands, and developed lands. Typical forest communities within the Project area include upland deciduous, mixed conifer-deciduous hardwood, and conifer forests. Deciduous forests include hardwoods such as American beech, red maple, sugar maple, and wild black cherry. Conifer species found within the Project area typically include Eastern hemlock and Eastern white pine. Shrubs include highbush blueberry, silky dogwood, rosebay, witch-hazel, moose-wood, witch-hobble, holly, shadbush, and hornbeam. Herbaceous layers encountered within the Project area are typically sparse and can include Canada mayflower, starflower, New York fern, fancy fern, shining clubmoss, teaberry, wild sarsaparilla, Indian cucumber-root, partridge-berry, and bluebead lily. Agricultural lands include areas used for raising crops, grazing livestock, and tree farms. Open lands are typically previously disturbed lands that have been cleared for farming, utility construction, or other developments and then abandoned, and include grasslands, successional old fields and shrub lands, and maintained utility rights-of-way. Developed areas consist of roads, railroads, parking lots, residential lawns, and commercial lawns. Generally, vegetation associated with developed areas consists of mowed and maintained grasses and forbs. The temporary and permanent acreage affected by construction and operation of the pipeline facilities is provided in table B.4-1 for each of the above-described land use categories.

As detailed in table A.5-1, the total acreage that would be affected by the proposed pipeline, ATWS, staging areas, pipe yards, aboveground ancillary facilities, and access roads is 262.6 acres, of which 183.3 acres is associated with the temporary construction right-of-way and 79.3 acres is associated with the permanent operational right-of-way. The Project is expected to result in a total of 49.4 acres of impact (18 percent of the total footprint) on agricultural lands, 125.3 acres (46 percent of the total Project footprint) on open lands, and 47.0 acres (18 percent of the total Project footprint) on forested lands. The remaining areas affected by Project construction would be developed areas (industrial, commercial, residential lands, and roadways), aquatic areas, and mixed lands (agriculture/open, agriculture/forest, etc.).

Of the 49.4 acres of impacts on agricultural lands, approximately 46.4 acres would be associated with temporary construction workspace. Approximately 0.3 acre of agricultural land would be permanently converted to an access road. Once restoration is complete, the temporary construction workspace and permanent right-of-way not converted to an access road would be available for continued use as agricultural lands (see section B.1.2 for further information regarding soil restoration in agricultural areas).

The PADCNR Bureau of Forestry identified four state threatened or endangered plant species or species of special concern that could be present in the Project area, including water bulrush, slender sedge, dwarf mistletoe, and small beggar-ticks. TGP completed surveys for the above-mentioned species, which found suitable habitat but no occurrences within the Project study area. Therefore, we do not anticipate impacts on these species. Additional information regarding consultations with the PADCNR is provided in section B.3.4.2.

The Project would cross the following Pennsylvania Natural Heritage Program Core Habitat areas: Bethel Swamp, Pipeline Bog, Little Teedyuskung Lake, Teedyuskung Lake, and Lackawaxen River at Rowland. The locations of Core Habitat areas crossed by the Project are detailed in section B.4.2. According to the Pennsylvania Natural Heritage Program, Core Habitats are areas containing plant or animal species of concern at the state or federal levels, exemplary natural communities, or exceptional native diversity. Core Habitats delineate essential habitat that cannot absorb significant levels of activity without substantial impact on the elements of concern. The Project also crosses supporting Pennsylvania Natural Heritage Landscape Conservation Areas (LCAs), including those adjacent to Bethel Swamp, Pipeline Bog, Little Teedyuskung Lake, Teedyuskung Lake, and Lackawaxen River and Rowland. The locations of LCAs crossed by the Project are detailed in section B.4.2. LCAs are large, contiguous areas that are important because of their size, open space, habitats, or inclusion in a Core Habitat area. TGP consulted with federal and state agencies with jurisdiction over protected plants, animals, and habitats as part of the Project-specific Pennsylvania Natural Diversity Index (PNDI) review. State and federal agencies provided specific comments for protection of species, as described in section B.3.3. We conclude that there would be no significant effect on Core Habitat or LCAs through TGP's following state and federal regulations: TGP's Plan, Procedures, Migratory Bird Impact Assessment and Conservation Plan, and E&SCP; and federal and state agency recommendations outlined in sections B.3.4.1 and B.3.4.2.

Noxious weeds are a concern along the proposed Loops 322 and 323 due to the potential for spreading as a result of soil disturbances associated with construction activities. In addition, noxious weeds can out-compete native vegetation and change the composition of native vegetation communities. TGP would implement its *Noxious and Invasive Weed Control Plan* to minimize the potential for the establishment and spread of noxious weeds during and after construction. Per TGP's *Noxious and Invasive Weed Control Plan*, TGP's EI would identify and flag areas of concern while in the field to alert construction personnel and prevent access into areas until noxious and/or invasive weed management control measures have been implemented. Measures required by the *Noxious and Invasive Weed Control*

Plan include contractors ensuring that work vehicles arrive at the site clean and weed-free, and using compressed air or other means to remove soil and propagules from machinery and vehicles to prevent their transport to other sections of the right-of-way. We have reviewed this plan and find it acceptable.

After construction is complete, the rights-of-way for Loops 322 and 323 and all temporary work areas would be revegetated according to TGP's Plan and E&SCP. Land disturbance associated with Loops 322 and 323 would occur primarily in open land. Land disturbance associated with aboveground facilities would occur within open land and agricultural areas. After construction, TGP would revegetate all temporary work areas in accordance with its Plan, and all other areas would be maintained in permanent operational use. Land outside the permanent easement would be permitted to revegetate naturally, which would be a short-term impact on open land (3 to 12 months to reach preconstruction densities) and a long-term impact on forested areas (30 to 50 years to reach preconstruction mature tree size and densities).

Of the 47.0 acres of impacts on forested lands, 34.5 acres would be temporarily impacted during construction, and the remaining 12.5 acres of impacts on forest lands would be associated with the permanent right-of-way. Forest impacts would be considered long-term, as the clearing of mature, woody vegetation would result in the greatest degree of change in terms of vegetation strata, appearance, and habitat. The reestablishment of native woody vegetation within forested areas would be allowed in the temporary impact areas to limit the amount of permanent impacts; however, natural restoration of preconstruction forest densities is expected to take 30 to 50 years. To reduce impacts on forests, the Project has been co-located within the existing maintained right-of-way of TGP's 300 Lines, shifting the edge effect of the new maintained right-of-way associated with the Project and avoiding additional habitat fragmentation.

We received a comment regarding plantings of American chestnut trees in the temporary construction right-of-way associated with previous TGP 300 Line projects. The commenter noted that these trees were planted using a grant from TGP for wildlife habitat and as part of a reforestation plan, and requested that TGP restore these plantings following pipeline construction. We agree that these plantings should be returned and or relocated to continue to function as wildlife habitat, therefore, **we recommend that:**

- **<u>Prior to construction</u>, TGP should file with the Secretary, for the review and written approval of the Director of the Office of Energy Projects (OEP), an American chestnut tree restoration plan. The restoration plan should:**

    1) **identify the location of American chestnut trees planted in the previously disturbed temporary construction right-of-way as part of reforestation activities associated with 300 Line construction, <u>and</u> that would be disturbed by construction of the Orion Project; and**

    2) **detail how TGP would restore these plantings where feasible and agreed upon by the landowner.**

Given that much of the Project route for Loops 322 and 323 would be co-located within TGP's existing right-of-way, impacts on forested vegetation would be minimized to the extent possible. In addition, the majority of the proposed aboveground facilities are adjacent to existing aboveground facilities, primarily in developed areas, with minimal impacts (less than 0.5 acre) on agricultural areas and open land. All staging areas and temporary workspaces would eventually revegetate to their preconstruction condition. For the reasons listed above, we conclude that the Project would not have a significant impact on vegetation.

3.2 Wildlife

Wildlife habitats in the Project area are based on the vegetation types present, which include upland forests, open lands, agricultural lands, developed lands, and wetlands. Common wildlife and habitat types found in the Project area are presented in table 1 of appendix B. Potential impacts on wildlife include habitat removal, habitat fragmentation, and construction-related ground disturbance and noise. Some individual animals may be inadvertently injured or killed by construction equipment. However, more mobile species such as birds and mammals would likely relocate to other nearby suitable habitat to avoid the Project area once construction activities commence. Co-locating Loops 322 and 323 along existing, maintained rights-of-way minimizes habitat fragmentation, which is not expected to be significant. The temporary disturbance of local habitat is not expected to have population-level effects on wildlife because the amount of habitat crossed represents only a small portion of the habitat available to wildlife throughout the Project area, much of which would return to preconstruction use. The widening of cleared areas within forested habitat could affect species that are intolerant of edge habitat, such as interior-dwelling bird species. However, permanent impacts from habitat alteration would be further minimized by the implementation of the mitigation measures contained in TGP's Plan, which would ensure revegetation of most areas disturbed by construction. After construction, wildlife is expected to return and colonize post-construction habitats. As noted in Section 3.1, forest impacts would be considered long-term, as the clearing of mature, woody vegetation would result in the greatest degree of change in terms of vegetation strata, appearance, and habitat. To mitigate forest impacts, the Project would be co-located within the existing maintained right-of-way of TGP's 300 Lines. Therefore, we conclude that the Project would not have a significant impact on wildlife or their habitat in the Project area.

Approximately 0.14 mile of the proposed Loop 323 crosses Pennsylvania State Game Lands No. 116, under the jurisdiction of the Pennsylvania Game Commission (PAGC). TGP obtained a Special Use Permit from the PAGC to conduct surveys from April to August 2015. In December 2015, TGP submitted an Application for Right-of-Way License on State Game Lands to the PAGC in order to site 0.14 mile of Loop 323 within the State Game Lands property: the license has not yet been approved. This license may include special provisions for construction across the State Game Lands property.

3.2.1 Migratory Birds

Migratory birds are species that nest in the United States and Canada during the summer and then migrate to and from the tropical regions of Mexico, Central and South America, and the Caribbean for the non-breeding season. Migratory birds are protected under the Migratory Bird Treaty Act (MBTA) (16 USC 703–711), and bald and golden eagles are additionally protected under the Bald and Golden Eagle Act (16 USC 668–668d). The MBTA, as amended, prohibits the taking, killing, possession, transportation, and importation of migratory birds, their eggs, parts, and nests. Executive Order 13186 (66 Federal Register 3853) was enacted in 2001 to, among other things, ensure that environmental analyses of federal actions evaluate the impacts of actions on migratory birds. Executive Order 13186 directs federal agencies to identify where unintentional take is likely to have a measurable negative effect on migratory bird populations; avoid or minimize adverse impacts on migratory birds through enhanced collaboration with the U.S. Fish and Wildlife Service (FWS); emphasize species of concern, priority habitats, and key risk factors; and give particular focus to population-level impacts. Executive Order 13186 also requires federal agencies to identify where unintentional "take" (i.e., the unintended death, harm, or harassment) is likely to have a measurable negative effect on migratory bird populations.

On March 30, 2011, the FWS and the Commission entered into a Memorandum of Understanding between FERC and the FWS Regarding Implementation of Executive Order 13186, "Responsibilities of Federal Agencies to Protect Migratory Birds," which focuses on avoiding or minimizing adverse impacts

on migratory birds and strengthening migratory bird conservation through enhanced collaboration between the two agencies. This voluntary Memorandum of Understanding does not waive legal requirements under the MBTA, Bald and Golden Eagle Protection Act (BGEPA), Endangered Species Act (ESA), Federal Power Act, NGA, or any other statutes, and does not authorize the take of migratory birds.

The FWS Pennsylvania Field Office Information for Planning and Conservation report indicated there are 18 species of migratory birds protected under the MBTA within the Project area, 13 of which are also listed as birds of conservation concern (BCC). Certain construction activities would occur during the nesting season for migratory birds (generally considered April 1 to August 31). Therefore, direct and indirect impacts on migratory birds could result from construction. Examples of potential impacts include habitat loss, disruption of foraging adults, and abandonment or destruction of active nests. TGP would avoid or minimize direct impacts on migratory birds by conducting clearing activities of natural or semi-natural habitats (e.g., forests, woodlots, reverting fields, fencerows, and shrubby areas) outside of the nesting season for migratory birds within the Project area (April 1 to August 31), as further described in section A.6.3 and below.

This EA also discusses several plans (i.e., TGP's Plan, Procedures, E&SCP, and SPCC Plan) that contain Project-specific mitigation measures that would reduce the extent and duration of impacts on migratory bird habitat, actively and naturally allow a great majority of the construction right-of-way to return to preconstruction condition, and limit the potential effects from spills or environmental contamination.

Due to the potential for impacts on tree-nesting birds in forested areas within the Project area, TGP intends to implement bird conservation measures and BMPs, including conducting tree felling activities outside of the nesting season (which is generally April 1 to August 31) to preclude avian species from nesting within the proposed right-of-way. Further, TGP has also committed to conduct all tree clearing activities between November 15 and March 31 to minimize impacts on federally listed bats; this would also confer protection to migratory bird species. In the event that unforeseeable issues arise that result in TGP being unable to conduct tree-felling activities outside of the nesting season, TGP would coordinate with the FWS regarding appropriate conservation measures that could be implemented between April 1 and August 31. Potential habitat loss has been minimized to the extent practicable by co-locating Loops 322 and 323 adjacent to TGP's existing right-of-way.

TGP submitted a Migratory Bird Impact Assessment and Conservation Plan to the FWS for review on October 28, 2015. In a letter dated May 5, 2016, the FWS stated that it has reviewed the plan and appreciates TGP's efforts in minimizing Project impacts on migratory birds.

Approximately 1.4 miles of proposed pipeline loop crosses through the Upper Delaware Scenic River Important Bird Area, as classified by the Pennsylvania Audubon Society. TGP's proposed co-location of Loop 322 with its existing 300 Line would minimize impacts on this area. During operation of the Project, vegetation maintenance clearing would occur outside of the migratory bird nesting season in accordance with TGP's Plan. For the reasons listed above, we determine that the Project would not significantly affect migratory bird species within or in close proximity to the Project area.

Bald Eagle

The bald eagle is no longer an ESA-listed species but is still protected under the BGEPA and the MBTA. Bald eagle nests were not observed during TGP's habitat assessments, and neither the FWS nor the state wildlife agencies identified any known bald eagle nests in the Project area. TGP would notify the FWS in the event that an eagle nest is encountered in the Project area.

3.3 Fisheries

The Project would cross 30 waterbodies, nine of which are designated as High Quality—Coldwater Fisheries and one designated as a High Quality—Trout Stocked Fishery. An additional 18 waterbodies drain to High Quality—Coldwater Fisheries designated streams, and two drain to High Quality—Trout Stocked Fishery streams. One stream crossed by the Project is designated as an Approved Trout Water—Trout Stocked Fishery. Twelve streams crossed by the Project drain to an Approved Trout Water—Trout Stocked Fishery, and one stream crossed by the Project drains to an Approved Trout Water. Approved Trout Waters contain significant portions that are open to public fishing and are stocked with trout by the PAFBC. The PAFBC is considering one stream crossed by the Project for Wild Trout Designation, and 12 additional waterbodies crossed by the Project drain to streams being considered by the PAFBC for Wild Trout Designations. TGP has committed to developing a construction schedule for the Project under the assumption that these streams would be designated prior to the start of construction, and that in-stream work restrictions would apply. In the event that the streams are not designated at the time of construction, TGP would work with the selected contractor to determine if a change in the proposed construction schedule would benefit the Project timeline, and would adapt the schedule accordingly. No waterbodies would be affected by the proposed aboveground facilities. Federally designated Essential Fish Habitat is included as fisheries of special concern; however, no impacts on federally listed or proposed fish species are anticipated, and no further consultation or coordination is required for Essential Fish Habitat. The Project does not cross any Exceptional Value streams as defined by 25 Pennsylvania Code (Pa. Code) 93.4b (b). In addition, the Project would not cross or be in close proximity to any warmwater fisheries. Table 3 of appendix B outlines waterbodies identified as potential fisheries resources of special concern, including their approved in-stream work windows.

Construction impacts on fishery resources may include direct contact by construction equipment with food resources in the form of relatively immobile prey, increased sedimentation and water turbidity immediately downstream of the construction work area, alteration or removal of aquatic habitat cover, introduction of pollutants, impingement or entrainment of fish and other biota associated with the use of water pumps at dam and pump crossings, and downstream scour associated with the use of those same pumps. Fish passage would only be temporarily interrupted during the dam and pump process, and would be restored immediately after the restoration of the stream bed and banks. The short-term and localized interruption of fish passage is not anticipated to dramatically affect the migration of fish within the stream systems.

Based on our analysis, we have determined that there are no threatened or endangered species present in any of the waterbodies crossed by the Project, as further discussed in section B.3.4. TGP would adhere to the timing restrictions and implementation of water quality protection standards for construction in accordance with regulations and procedures set by FERC and state regulatory agencies. Per TGP's Procedures, construction in Approved Trout Waters-Trout Stocked Fisheries or waters that drain to Approved Trout Waters-Trout Stocked Fisheries would take place from June 16 to February 28. Construction in waters with Wild Trout Designations or those draining to waters with Wild Trout Designations would take place from January 1 to September 30, if designations are finalized prior to the start of construction. For the reasons described above, we conclude that the Project would not significantly affect fisheries within the Project area.

3.4 Special Status Species

Special status species are those species for which state or federal agencies provide an additional level of protection by law, regulation, or policy. Included in this category for this EA are federally listed species that are protected under the ESA or are considered candidates for such listing by the FWS, those

species that are state-listed as threatened or endangered, and state species of special concern. Information on species potentially occurring in the Project area is presented in table B.3-2. No special status species were noted to occur in the vicinity of proposed water withdrawal locations or Compressor Station 323.

3.4.1 Federally Listed Species

Federal agencies are required under Section 7 of the ESA, as amended, to ensure that any actions authorized, funded, or carried out by the agency do not jeopardize the continued existence of a federally listed endangered or threatened species or result in the destruction or adverse modification of the designated critical habitat of a federally listed species. As the lead federal agency potentially authorizing the Project, FERC is required to consult with the FWS to determine whether federally listed endangered or threatened species or designated critical habitat are found near the Project, and to evaluate the proposed action's potential effects on those species or critical habitats.

For actions involving major construction activities with the potential to affect listed species or designated critical habitat, the lead federal agency must report its findings to the FWS in a Biological Assessment for those species that may be affected. If it is determined that the action is likely to adversely affect a listed species, the federal agency must submit a request for formal consultation to comply with Section 7 of the ESA. In response, the FWS would issue a Biological Opinion as to whether the federal action would jeopardize the continued existence of a listed species, or result in the destruction or adverse modification of designated critical habitat.

TGP, acting as FERC's non-federal representative for the purpose of complying with Section 7(a)(2) of the ESA, initiated informal consultation with the FWS for federally listed threatened or endangered species potentially occurring in the Project area. TGP also consulted with the PADCNR, PAFBC, and PAGC regarding state-listed species and habitats.

TGP's consultation with the FWS Pennsylvania Field Office indicated that the northern long-eared bat and Indiana bat, both federally listed species, are known to occur in the Project area. No other federally listed species potentially occur in the Project area.

Northern Long-Eared Bat

The northern long-eared bat was formally listed as a federally threatened species in April 2015. Northern long-eared bats occur in widespread, but uncommon, patterns in forest habitats. During the winter, these bats hibernate in caves and underground mines. Individuals may travel up to 35 miles from their summer habitat to their winter hibernacula. Summer roosting habitat, including maternity roosts, includes tree cavities, exfoliating bark, snags of dead or dying trees, and man-made structures (e.g., barns). The FWS Pennsylvania Field Office indicated that previous bat surveys have captured northern long-eared bats within the Project area. TGP conducted summer bat species surveys, which revealed the occurrence of northern long-eared bats within the Project area.

TGP also conducted a study to evaluate the potential of cave and mine portals suitable for serving as winter hibernacula for bats. Field surveys were negative for the presence of cave or mine portals within the Project area.

TABLE B.3-2

Federally and State-Listed Species Potentially Occurring in the Project Area

Species	Scientific Name	Status	322 Loop	323 Loop	Pipe Yard No. 1	Pipe Yard No. 2	Pipe Yard No. 3	Access Roads
Timber rattlesnake	*Crotalus horridus*	CS	X	X	–	–	X	–
Eastern small footed bat	*Myotis leibii*	ST	X	X	–	–	–	–
Indiana bat	*Myotis sodalis*	FE	X	X	–	–	–	–
Northern long-eared bat	*Myotic sodalist*	FT	X	X	–	–	–	–
American bittern	*Botaurus lengtiginosus*	MBTA	X	X	X	X	X	X
Bald eagle	*Haliaeetus leucocephalus*	BEGPA, BCC, MBTA	X	X	X	X	X	X
Black-billed cuckoo	*Coccyzus erythropthalmus*	MBTA	X	X	X	X	X	X
Blue-winged warbler	*Dendroica cerulea*	BCC, MBTA	X	X	X	X	X	X
Canada warbler	*Cardellina canadensis*	BCC, MBTA	X	X	X	X	X	X
Cerulean warbler	*Dendroica caerulea*	BCC, MBTA	X	X	X	X	X	X
Golden-winged warbler	*Vermivora chrysoptera*	BCC, MBTA	X	X	X	X	X	X
Kentucky warbler	*Oporomis formosus*	BCC, MBTA	X	X	X	X	X	X
Least bittern	*Ixobrychus exilis*	MBTA	X	X	X	X	X	X
Louisiana waterthrush	*Parkesia motacilla*	BCC, MBTA	X	X	X	X	X	X
Pied-billed grebe	*Podilymbus podiceps*	MBTA	X	X	X	X	X	X
Prairie warbler	*Dendroica discolor*	BCC, MBTA	X	X	X	X	X	X
Rusty blackbird	*Euphagus carolinus*	BCC, MBTA	X	X	X	X	X	X
Short-eared owl	*Asio flammeus*	MBTA	X	X	X	X	X	X
Upland sandpiper	*Bartramia longicauda*	BCC, MBTA						
Wood thrush	*Hylocichla mustelina*	BCC, MBTA	X	X	X	X	X	X
Worm-eating warbler	*Helmitheros vermivorum*	BCC, MBTA	X	X	X	X	X	X

CS = Candidate Species under review for further listing by the PAFBC
BGEPA = Bald and Golden Eagle Protection Act
FT = Federally Threatened
FE = Federally Endangered
ST = State Threatened
BCC = Birds of Conservation Concern
MBTA = Migratory Bird Treaty Act

The FWS issued a programmatic biological opinion on the final 4(d) Rule for the northern long-eared bat. The Project would not be within 0.25 mile of a known northern long-eared bat hibernaculum, or within 150 feet of a known, occupied maternity roost tree. Based on our review of the January 14, 2016, final 4(d) Rule, we conclude that any potential incidental take of northern long-eared bats from tree clearing activities is not prohibited and we may rely upon the finding of the programmatic biological opinion for the final 4(d) rule. However, TGP does propose to conduct all tree clearing activities between November 15 and March 31 to minimize impacts on Indiana bat as discussed below, which would also confer protection for the northern long-eared bat. In a response dated May 5, 2016, and addressed to TetraTech, environmental consulting firm for TGP, the FWS Pennsylvania Field Office concurred with TetraTech's determination that any incidental take that might result from tree removal would not be prohibited and stated that no further consultation regarding the northern long-eared bat is necessary. We concur.

Indiana Bat

The Indiana bat is a federally listed endangered species known to occur within the Project area. Indiana bats are primarily associated with second growth deciduous forests. During the summer months, habitat usually consists of wooded or semi-wooded areas, while winter habitat consists of caves, preferably medium sized limestone caves with pools. Indiana bats roost and hibernate in colonies. Maternity roost trees typically consist of trees with crevices or loose bark, while males primarily roost in dead snags and large diameter trees with sloughing bark.

The FWS Pennsylvania Field Office indicated that previous bat surveys have captured Indiana bats in the Project area, and requested that TGP conduct surveys and prepare an Indiana Bat Conservation Plan. TGP conducted summer bat species surveys, which did not capture any Indiana bats. TGP also conducted a study to evaluate the presence of cave and mine portals suitable for serving as winter hibernacula for bats. Field surveys were negative for the presence of cave or mine portals within the Project area. TGP submitted an Indiana Bat Conservation Plan to the FWS Pennsylvania Field Office on March 3, 2016, which included minimization measures of conducting tree removal between November 15 and March 31, and a donation to Pennsylvania's Indiana Bat Conservation Fund. In responses dated April 6, 2016, and May 5, 2016, the FWS Pennsylvania Field Office indicated that it had reviewed TGP's Indiana Bat Conservation Plan and stated that the plan addresses the agency's recommended avoidance, minimization, and compensation measures; and that with the implementation of the measures outlined in the plan, the effects of the Project on the Indiana bat are insignificant or discountable. As such, consultation for this species is complete under the ESA. Given that TGP's summer bat surveys did not capture any Indiana bats and that TGP has implemented proposed tree clearing restrictions and mitigation, and given the FWS Pennsylvania Field Office responses, we concur with the findings of the FWS Pennsylvania Field Office that the effects of the Project on the Indiana bat are insignificant or discountable and that no further Section 7 consultation is required for this species.

3.4.2 State-Listed Species

State-listed threatened and endangered species in Pennsylvania are protected under Pa. Code, Title 58, Part II. The PAGC, PAFBC, and PADCNR are the three agencies responsible for administering this law. Mammals and birds are under the jurisdiction of the PAGC. Fish, reptiles, amphibians, and aquatic organisms are under the jurisdiction of the PAFBC. Plants, natural communities, terrestrial invertebrates, and geological features are under the jurisdiction of the PADCNR.

TGP consulted with the PAGC, PAFBC, and PADCNR in April 2015 via a PNDI Environmental Review large project request. The PAGC determined that the Project had the potential to affect the Indiana bat and northern long-eared bat, and that as both species are also federally protected, the PAGC

deferred comment on potential impacts on these species to the FWS Pennsylvania Field Office, which are summarized in section B.3.4.1. TGP provided subsequent updates to the PAGC in December 2015, January 2016, and April 2016 regarding Project modifications, including pipe yards, water withdrawal locations, temporary access roads, and ATWS. No new listed species under the jurisdiction of the PAGC were identified. As noted in Section B.3.4.1, consultations regarding the Indiana bat and northern long-eared bat are considered complete under the ESA.

The PADCNR Bureau of Forestry identified four state threatened or endangered plant species or species of special concern that could be present in the Project area, including water bulrush, slender sedge, dwarf mistletoe, and small beggar-ticks. TGP completed surveys for the above-mentioned species and found suitable habitat but no occurrences within the Project study area. Therefore, the PADCNR issued a finding of "no impact anticipated, per botanical survey," on October 13, 2015. TGP submitted notification of modifications to the Project footprint to the PADCNR in December 2015 for the addition of three pipe yards and four water withdrawal locations, in January 2016 for ATWS at the Lackawaxen River Crossing, and in April 2016 for the addition of a temporary access road. TGP performed habitat surveys within the Project modification areas for the four PADCNR identified species and determined no suitable habitat for threatened, endangered, or special status was present. The PADCNR concurred with the survey reports and issued a finding of "no impact anticipated."

The PAFBC indicated that the timber rattlesnake is a species of special concern that may be present within the Project area. TGP reviewed previously conducted habitat surveys and completed new habitat surveys where necessary, and determined that either no suitable habitat for the timber rattlesnake was present, or potential habitat areas were outside of the limits of disturbance for the Project. Survey results were submitted to the PAFBC on July 28, 2015. On August 20, 2015, the PAFBC issued a response that no adverse impacts on known den locations, natural and recreated gestation habitats, or timber rattlesnakes are expected, provided TGP adhered to Project-specific recommendations. These Project-specific recommendations include:

- conducting earth-disturbing activities within 0.5 mile of known den locations between April 15 and October 15;
- fencing off known den and potential habitat locations to prevent workers from accidentally entering the areas;
- having a PAFBC-approved rattlesnake biologist present on site during construction activities between April 15 and October 15 within 0.5 mile of each known den and critical habitat location to inspect the Project area and document timber rattlesnakes encountered in the Project area;
- using erosion control fabric that reduces the risk of snake entrapment;
- advising workers that timber rattlesnakes may be encountered and to avoid, not kill, any timber rattlesnakes encountered; and
- relocating a proposed ATWS near a known den location.

TGP has committed to implementing these recommendations from the PAFBC. TGP submitted notification of modifications to the Project footprint to the PAFBC in December 2015 for the addition of three pipe yards and four water withdrawal locations, in January 2016 for ATWS at the Lackawaxen River Crossing, and in April 2016 for the addition of temporary access road 17. TGP performed habitat surveys within the Project modification areas for the timber rattlesnake and determined no suitable habitat

was present. The PAFBC indicated that based on a review of the Project modifications, no adverse impacts on the timber rattlesnake were anticipated, and no further surveys were recommended.

For the reasons listed above, we determine that the Project would not significantly affect state-listed species within the Project area.

4. LAND USE, RECREATIONAL, AND VISUAL RESOURCES

4.1 Land Use

The Project involves the construction and operation of pipeline facilities, referred to as Loop 322 and Loop 323. The Project also involves construction of appurtenant and auxiliary pipeline facilities, including a pig launcher and a pig receiver, as well as modifications to an existing compressor station. Three temporary pipe yards, ATWS, and access roads would be used during Project construction. Existing land uses in the Project area are listed as follows:

- Agricultural land: cultivated cropland, pastureland, hay fields, and associated facilities and features, including farm buildings;
- Forest: wooded lands not being used for other specific purposes, consisting of deciduous and coniferous types, including forested wetland areas and state forest lands;
- Roadway: paved or gravel surfaced federal, state, and local roads; private drives; and railways crossed by the right-of-way;
- Open land: non-forested lands and scrub-shrub wetlands used for open space, pasture, or existing utility rights-of-way; and open space lands not specifically designated for outdoor recreation or agriculture;
- Residential land: properties used primarily for dwellings, including associated outbuildings such as garages and sheds, and planned new residential developments;
- Industrial/Commercial: properties used primarily for industrial activities such as gas or electric power utility stations; and
- Open water: water crossings greater than 100 feet.

Potential land use impacts associated with pipeline facilities, ATWS, access roads, and aboveground facilities are discussed below.

4.1.1 Pipeline Facilities

Construction of the pipeline facilities, which includes construction workspace, ATWS, access roads, staging areas, and pipe yards, would disturb approximately 262.0 acres of land, of which 43.9 acres would be newly maintained permanent right-of-way or permanent access roads. The remaining 218.1 acres would consist of temporary workspace, ATWS, staging areas, pipe yards, or part of the existing 300 Line right-of-way, all of which would revert to previous land use following construction. Table B.4-1 summarizes the land use types that would be crossed by the pipeline facilities.

TABLE B.4-1

Acreage Affected by Construction and Operation of the Pipeline Facilities

Land Use Category	Temporary Construction Workspace (acres)[a]	Permanent Right-of-Way (acres)[b]	Total (acres)
LOOP 322 and 323			
Forest	32.8	12.5	45.3
Agricultural	3.0	2.7	5.7
Roadways	0.8	0.5	1.3
Open land	41.9	62.2	104.1
Industrial/Commercial	0.2	<0.1	0.2
Residential	0.3	<0.1	0.3
Open water	0.3	0.2	0.5
300-3 Loop Total	**79.2**	**78.2**	**157.4**
ATWS			
Forest	1.7	0	1.7
Agricultural	0.8	0	0.8
Open land	18.9	0	18.9
Industrial/Commercial	6.3	0	6.3
ATWS and Water Withdrawal Locations Total	**27.7**	**0**	**27.7**
PIPE YARDS, STAGING AREAS, AND WATER WITHDRAWAL LOCATIONS[c]			
Industrial	15.4	0	15.4
Agriculture	42.6	0	42.6
Open land	2.2	0	2.2
Developed	0.7	0	0.7
Residential	0.2	0	0.2
Pipe Yard, Staging Area, and Water Withdrawal Locations Total	**61.1**	**0**	**61.1**
ACCESS ROADS			
Roadway	15.4	0.2	15.6
Agriculture	0	0.3	0.3
Open land (existing right-of-way)	0	0.1	0.1
Access Roads Total	**15.4**	**0.6**	**16.0**
PIPELINE FACILITIES TOTAL	**183.4**	**78.8**	**262.2**

[a] Includes land that would only be affected by construction.

[b] Includes all land that would only be permanently affected by operations, including portions of the existing 300-3 Line right-of-way and new permanent right of way.

[c] Portions of Contractor Yard No. 1 and Pipe Yard No. 3 contain forested or shrub components in sloped and/or peripheral areas; however, TGP has committed to not clearing those areas within the designated yards.

Operation of the Project would require a 50-foot-wide permanent right-of-way centered on the pipeline in most areas. TGP proposes to use 25 feet of existing right-of-way width associated with the existing permanent easement of the 300 Line system and to add 25 feet of new permanent easement, except in locations where the pipeline would be adjacent to an existing electric transmission line right-of-way, where 50 feet of new permanent easement width would be required. The width of TGP's existing permanent right-of-way for the 300 Line system in the Project area varies from 50 to 150 feet. As a result, the total permanent easement would increase to between 75 and 175 feet, except in areas where the pipeline would not be directly adjacent to the existing 300 Line system.

The major land use types that would be traversed by the pipeline facilities include forested land, agricultural land, open land, industrial/commercial areas, roadways, and residential land. These land uses are described below.

Forest Lands

Forest land along the pipeline right-of-way consists of both deciduous and coniferous forests. Construction of the pipeline would affect approximately 47.0 acres of forest lands, which include approximately 1.7 acres of ATWS. Approximately 12.5 acres of forested land would be permanently affected during the operation of the pipeline facilities.

All of the trees within the construction right-of-way would be removed during clearing and preparation of the right-of-way. A 50-foot-wide permanent easement would be maintained in an herbaceous state over the centerline, which would prohibit the growth of woody species. Land outside the operational easement would be permitted to revegetate naturally, which is expected to take 30 to 50 years to reach preconstruction vegetation densities. The clearing of forested lands represents a permanent impact for the usable life of the pipeline. However, because the pipelines would generally be adjacent to and within existing pipeline rights-of-way, tree clearing would be minimized to the greatest extent practicable, and mostly adjacent to already cleared areas.

We received comments from a landowner within the Project right-of-way who expressed concerns regarding forest clearing in construction temporary workspace, inadequate site maps provided to the landowner, and impacts on trees planted by TGP as part of the reforestation plan after a previous TGP pipeline was constructed. We have reviewed TGP's proposed construction workspace and believe that it is reasonable. By proposing to co-locate the Project adjacent to the existing 300 Line, as opposed to in an entirely new right-of-way, TGP has minimized, to the extent practicable, the need for new construction workspace.

Agricultural

Construction of the pipeline, including ATWS, staging areas, and access roads, would affect approximately 6.8 acres of active agricultural land. Approximately 0.3 acre would be converted into a permanent access road to be used during operation of the pipeline facilities. In addition, approximately 42.6 acres of agricultural lands would be used as temporary construction workspace for pipe yards and staging areas. Impacts resulting from construction through agricultural lands would be primarily limited to the growing season when construction occurs. All agricultural land affected by construction would be returned to agricultural use following construction, and agricultural uses would be permitted within the permanent right-of-way in accordance with applicable easement agreements. TGP would compensate landowners for crop losses and other damages caused by construction activities.

Because the pipeline is proposed to be adjacent to and within existing pipeline rights-of-way, the loss of arable lands would be minimized to the greatest extent practicable. To further minimize impacts on the soil profile of agricultural lands, up to 12 inches of topsoil would be segregated from subsoil during trenching and would remain segregated during construction to avoid loss due to mixing with subsoil material. In areas where topsoil would be segregated, TGP would utilize either the full right-of-way or ditch plus spoil side method, as requested by the landowner or as appropriate based upon site-specific conditions.

Open Land

Construction of the pipelines would affect approximately 125.3 acres of open land, which includes approximately 21.2 acres of ATWS, staging areas, pipe yards, and access roads. Approximately 62.2 acres of open land would be maintained as permanent right-of-way for operation of the pipeline facilities. Open land comprises the majority of the existing 300 Line right-of-way. Impacts on open land would be short term and occur primarily during construction. Following restoration activities, open land vegetation would return to its pre-existing condition in approximately 3 to 12 months. Vegetation in the operational right-of-way would be permanently maintained in an herbaceous state. Given its current use on the existing pipeline rights-of-way, open land would not be significantly affected by the pipeline facilities.

Industrial/Commercial

Construction of the pipeline, including approximately 6.3 acres of ATWS, would require disturbance of approximately 6.5 acres of industrial/commercial land. In addition, approximately 15.4 acres of industrial/commercial lands would be used as temporary construction workspace for contractor and pipe yards. Less than 0.1 acre of industrial/commercial land would be maintained as permanent right of way. All remaining industrial/commercial land would be allowed to return to pre-existing condition.

Residential

Construction of the pipelines would affect approximately 0.5 acre of developed residential land. Residential areas within the construction workspace would be restored to preconstruction conditions, except that trees and certain other residential activities, such as digging for foundations, installing swimming pools, constructing garages, etc., would not be permitted within the permanent right-of-way.

There are two known residences and eight additional structures within 50 feet of the pipeline workspace, as identified in table B.4-2. In order to minimize the impact on these residents, TGP would implement the following measures for all residences and structures within 50 feet of the construction right-of-way:

- attempting to reduce the construction area to maintain a 25-foot-wide construction workspace for a distance of 100 feet on either side of a residence or structure, where possible (for residences where this cannot be accommodated, a site-specific residential construction plan has been developed);

- restoring all lawn areas and landscaping in accordance with TGP's Plan and individual landowner agreements immediately after backfilling;

- fencing the construction work area adjacent to the residence for 100 feet in both directions to ensure that construction crews, materials, and equipment do not encroach the residence throughout the open trench phases of pipe installation;

- leaving landscaping and mature trees that are outside of the permanent easement intact within the construction work area, where feasible, unless the trees and landscaping interfere with the installation techniques or present unsafe working conditions;

- ensuring piping is welded and installed as quickly as reasonably possible to minimize the amount of time a neighborhood is affected by construction;

- backfilling the trench within 10 days after the pipe is laid in the trench or temporarily placing steel plates over the trench; and

- completing final cleanup, grading, and installation of permanent erosion control devices within 10 days after backfilling the trench, weather permitting.

For residences and occupied structures within 25 feet of construction workspace, TGP prepared site-specific residential construction plans, which are attached in appendix C. These plans include additional measures to minimize impacts on residents, such as erecting lighted barricades around excavations that must remain open after work hours and watering the right-of-way periodically to reduce fugitive dust emissions. We invite the landowners and/or residents at the locations to comment on the plans.

The two residences listed in table B.4-2 are within or near the proposed construction workspace. To ensure that property owners have adequate input to a construction activity occurring so close to their homes, **we recommend that**:

- **<u>Prior to construction</u>, TGP should file with the Secretary, for the review and written approval of the Director of OEP, evidence of landowner concurrence with the site-specific residential construction plans for the residences at MP 6.7 (appendix C, Figure C-2, Tract No. 883) and MP 7.6 (appendix C, Figure C-3, Tract No. 889.02) where proposed Project construction work areas are in close proximity to the residences.**

TABLE B.4-2

Residences and Related Structures Within 50 Feet of Project Construction Workspace

Nearest Pipeline Milepost	Structure Type	Distance to Edge of Workspace (feet)	Distance to Pipeline Centerline (feet)
0.7	Cabin/Outbuilding [a]	22	82
0.9	Garage [a]	Within workspace	71
1.2	Shed	38	113
1.7	Shed	31	116
1.9	Shed	Within workspace	46
6.7	Residential building [b]	5	19
6.7	Garage [b]	8	84
7.6	Residence (Trailer home) [c]	Within workspace	0
9.2	Shed	Within workspace	49
9.2	Shed	3	66

[a] Appendix C, Figure C-1, Tract No. 857.01.
[b] Appendix C, Figure C-2, Tract No. 883.
[c] Appendix C, Figure C-3, Tract No. 889.02.

Based on landowner comments received to date, as well as proximity of construction work areas to residential structures listed in table B.4-2, **we further recommend that:**

- **TGP should develop and implement Project-specific environmental complaint resolution procedures. The procedures should provide landowners with clear and simple directions for identifying and resolving their environmental mitigation problems/concerns during construction of the Project, and during restoration of the**

Project rights-of-way. Prior to construction of the Project, TGP should mail the complaint procedures to each landowner whose property would be crossed.

a. **In its letter to affected landowners, TGP should:**

(1) provide a local contact that the landowners should call first with their concerns; the letter should indicate how soon a landowner should expect a response;

(2) instruct the landowners that if they are not satisfied with the response, they should call TGP's Hotline (the letter should indicate how soon to expect a response); and

(3) instruct the landowners that if they are still not satisfied with the response from TGP's Hotline, they should contact the Commission's Landowner Helpline at 877-337-2237 or at LandownerHelp@ferc.gov.

b. In addition, TGP should include in its biweekly status report for the Project a copy of a table that contains the following information for each problem/concern:

(1) the identity of the caller and date of the call;

(2) the location by milepost and identification number from the authorized alignment sheet(s) of the affected property;

(3) a description of the problem/concern; and

(4) an explanation of how and when the problem was resolved, will be resolved, or why it has not been resolved.

Open Water

Less than 0.1 mile of the Project crosses open water, including one waterbody crossing (Lackawaxen River) greater than 100 feet wide. The Project would result in no long-term land use impacts on open water. Temporary impacts associated with this waterbody crossing are discussed in section B.2.1.

Roadways

The pipeline would cross public roadways or private driveways 13 times, and would cross one existing railroad corridor. Roads crossed by the pipeline range from dirt or gravel tracks to paved public roads. At the locations where TGP would install the pipeline via conventional bore, as identified in table B.4-3, traffic would not be affected. This includes the railroad crossing. On all other roadway crossings, where TGP would use an open cut method, there would be impacts on traffic. TGP would maintain an open traffic lane during construction except for a period of time during the lowering-in of the pipeline segment. TGP would employ flag persons and a police detail as necessary to ensure the orderly passage of vehicles and pedestrians during periods when only a single travel lane is maintained. Table B.4-3 describes the roads that would be crossed by the pipeline facilities.

TABLE B.4-3

Public Roads Crossed by the Pipeline Facilities

County	Township	Milepost	Road Name	Crossing Method [a]
Wayne	Berlin	0.1	Bethel School Road (State Route [SR] 2011)	Bore
Wayne	Berlin	0.2	Skycrest Road	Open cut
Wayne	Berlin	1.3	Fonda Road	Open cut
Wayne	Berlin	2.2	Swamp Brook Road (SR 2003)	Bore
Wayne	Palmyra	3.5	Mushpaw Road (SR 2003)	Open cut
Pike	Lackawaxen	6.7	Welcome Lake Road (SR 4003)	Bore
Pike	Lackawaxen	7.6	Wolden Meadows Road [b]	Open cut
Pike	Lackawaxen	8.1	Westcolang Road (TR439)	Bore
Pike	Lackawaxen	9.1	Chippewa Court [c]	Open cut
Pike	Lackawaxen	9.3	Maplewood Drive [c]	Open cut
Pike	Lackawaxen	10.4	Hamlin Highway (SR 590)	Bore
Pike	Lackawaxen	10.5	Rail Road	Bore
Pike	Lackawaxen	12.9	Hamlin Highway (SR 590)	Bore

[a] Proposed crossing method for roadways would be by open cut or bore, unless otherwise determined based on site-specific roadway conditions and consultation with the roadway authority.
[b] Private road; no access during construction.
[c] Private road maintained by homeowners association.

4.1.2 Additional Temporary Work Space

TGP identified certain areas where site-specific conditions would require the use of ATWS outside of the proposed nominal 110-foot-wide pipeline construction right-of-way. ATWS would be required at pipeline interconnections and in areas where the proposed pipeline route crosses wetlands, waterbodies, existing utilities, roads, and water withdrawal locations for hydrostatic testing. Impacts associated with ATWS are included with the pipeline construction impacts in table B.4-1. A list of ATWS associated with the Project is included in table 4 of appendix B. ATWS would temporarily affect about 27.7 acres of land, consisting of mainly open land. Approximately 1.7 acres of forested land would be cleared by ATWS. The use of the ATWS would not result in any permanent impacts on land use, although the clearing of forested lands would be a long-term impact. As discussed above for temporary pipeline right-of-way, natural restoration of preconstruction forest densities is expected to take at least 30 to 50 years. We have reviewed these workspaces and their justifications and find them acceptable.

TGP also proposes to use three pipe yards, three staging areas, and two water withdrawal locations within Wayne and Pike Counties to support construction activities (see table 4 of appendix B). The pipe yards, staging areas, and water withdrawal locations would temporarily affect about 60.5 acres of land, consisting of mainly industrial and agricultural areas. The proposed pipe yards and staging areas would not result in any impacts on forested lands. Impacts associated with the staging areas are shown in table B.4-1. Upon completion of construction, the pipe yards and staging areas would be restored in accordance with TGP's Plan, and prior use of the sites would resume. The use of the pipe yards, staging areas, and water withdrawal locations would not result in any permanent impacts on land use.

TABLE B.4-4

Non-Public Access Roads to be Used During Construction of the Pipeline Facilities

County	Township	Access Road Number	Milepost	Access Road Type	Existing Road Surface Type	Project Modifications	Length of Road (feet)	Area Affected: Temporary Only (acres)	Area Affected: Permanent (acres)	Area Affected: Total Affected by Project (acres)
Wayne	Berlin	PAR 1	0.0	Permanent	Dirt and gravel	Grade and create gravel surface	551 new, 466 existing	0.0	0.5 (0.3 new, 0.2 existing)	0.5
Wayne	Berlin	TAR 1	0.8	Temporary	Gravel	None	3,063	0.9	0.0	0.9
Wayne	Berlin	TAR 2	1.2	Temporary	Gravel	None	551	0.2	0.0	0.2
Wayne	Berlin	TAR 3	2.0	Temporary	Gravel	None	336	0.1	0.0	0.1
Wayne	Berlin	TAR 4	2.6	Temporary	Gravel	None	1,452	0.5	0.0	0.5
Wayne	Palmyra	TAR 5	3.7	Temporary	Gravel	None	460	0.1	0.0	0.1
Pike	Lackawaxen	TAR 6	4.4	Temporary	Gravel	None	3,115	1.8	0.0	1.8
Pike	Lackawaxen	TAR 7	5.4	Temporary	Gravel	None	6,812	2.4	0.0	2.4
Pike	Lackawaxen	TAR 8	6.5	Temporary	Gravel	Install temporary culvert/gravel crossing of stream	2,967	0.8	0.0	0.8
Pike	Lackawaxen	TAR 9	9.1	Temporary	Gravel	None	12,979	6.5	0.0	6.5
Pike	Lackawaxen	TAR 10	8.2	Temporary	Gravel	None	864	0.4	0.0	0.4
Pike	Lackawaxen	TAR 11	9.1	Temporary	Gravel	None	2,115	1.1	0.0	1.1
Pike	Lackawaxen	PAR 2	12.9	Permanent	Dirt (existing right-of-way)	Grade and create gravel surface	120	0.0	0.1	0.1
Pike	Lackawaxen	TAR 12	Corilla Lake	Temporary	Gravel	None	196	0.1	0.0	0.1
Pike	Lackawaxen	TAR 13	Tinkwig Lake	Temporary	Gravel	None	513	0.2	0.0	0.2
Pike	Lackawaxen	TAR 14	Lackawaxen River Bridge No. 1	Temporary	Gravel	None	246	0.1	0.0	0.1
Pike	Lackawaxen	TAR 15	Lackawaxen River Bridge No. 2	Temporary	Pavement	None	14	<0.1	0.0	<0.1
Pike	Lackawaxen	TAR 16	Lackawaxen River Bridge No. 2	Temporary	Pavement	None	16	<0.1	0.0	<0.1
Pike	Lackawaxen	TAR 17	Pipe Yard No. 3	Temporary	Gravel	None	444	0.2	0.0	0.2
ACCESS ROADS TOTALS								**15.4**	**0.6**	**16.0**

PAR = permanent access road; TAR = temporary access road

4.1.3 Access Roads

Existing public roads and the construction right-of-way would be used for primary access to the pipelines during construction. TGP proposes to construct 2 new permanent non-public access roads and use 17 existing public and non-public temporary access roads. TGP would modify one of these existing roads and use the other roads without alteration for access during construction and operations, as presented in table B.4-4. These existing roads have an asphalt, dirt, or gravel surface. The modifications would include installation of a temporary culvert and gravel for a stream crossing. The surface type of existing roads used for temporary access would not be permanently changed.

Modifications to existing roads would temporarily affect approximately 16.0 acres of land during construction. TGP proposes to construct two new roads that would be maintained as permanent access to the right-of-way. These new access roads would permanently affect 0.6 acre of land during operation of the pipeline facilities.

4.1.4 Aboveground Facilities

The aboveground facility modifications would only affect existing industrial, agricultural, and open lands. The industrial/open lands affected by the Project are comprised of the pig launcher and receiver sites of TGP's existing 300 Line and Compressor Station 323. Impacts from construction and operation of the aboveground facilities are described in table B.4-5.

TABLE B.4-5

Acreage Affected by Construction and Operations of the Aboveground Facilities

Facility	County, State	Approximate Milepost	Land Requirements: Construction only (acres)	Land Requirements: Operations (acres) [b]	Present Land Use
Upstream Tie-in Site (Pig Launcher Site) [a]	Wayne, PA	0.0	0.2	0.2	Agricultural
Downstream Tie-in Site (Pig Receiver Site)	Pike, PA	12.9	0.2	0.1	Open land (right-of-way)
Compressor Station 323	Pike, PA	8.2	<0.1	<0.1	Industrial/Open land
TOTALS			**0.5**	**0.5**	

[a] A portion of the construction land impacts associated with the upstream tie-in site are included in the pipeline facility construction workspace.

[b] Includes only new land required as a result of the Project and existing land associated with the 300 Line system.

All of the aboveground facilities would be at existing natural gas pipeline facilities or within the existing 300 Line right-of-way; therefore, the majority of the impacts would be on lands used for industrial or pipeline purposes. Impacts on the industrial facilities are expected to be minor and temporary, given that these facilities are owned by TGP. The impacts on day-to-day operations would not be significant. The construction activities at TGP's existing Compressor Station 323 would affect approximately 0.2 acre of industrial/open lands during construction and operations, all of which would be within the boundaries of Compressor Station 323 or the existing pipeline right-of-way. A small amount of agricultural land would be temporarily affected during construction of the upstream tie-in site.

Because the aboveground facilities are already owned by Project sponsors and activities would occur primarily on industrial/open lands, we conclude that the aboveground facilities would not pose a significant impact on land use.

4.2 Recreation and Special Use Areas

TGP consulted with state and federal land managing agencies to determine if recreational lands would be crossed by the proposed facilities. Portions of pipeline facilities would cross Pennsylvania State Game Lands, a wildlife management unit, the federally designated Appalachian Landscape Conservation Cooperative, five Core Habitat areas, seven Pennsylvania-designated LCAs, one Pennsylvania-designed Important Bird Area, and three private hunting properties, as listed in table B.4-6. In addition, the pipeline facilities would pass within 0.25 mile of Cricket Hill Golf Club and within approximately 200 feet of a municipal landfill.

TABLE B.4-6

Public Land and Designated Recreation, Scenic, or Other Areas in the Project Vicinity

Facility	County, State	Approximate Mileposts	Length of Crossing (feet) (Pipelines Only)
Camp Neshama	Wayne, PA	0.6 – 0.9	0 [a]
Bethel Swamp, Core Habitat of Natural Heritage Areas	Wayne, PA	0.8 – 1.1	1,740
Recreational Trail	Wayne, PA	1.1	10
Camp Fonda, private hunting camp	Wayne, PA	1.7 – 2.2	2,529
Supporting Landscape Conservation Area (LCA)	Wayne, PA	1.9 – 2.0	580
Rock Branch School	Wayne, PA	1.7	0 [a]
Cricket Hill Golf Course	Wayne, PA	2.0	0 [a]
Supporting LCA	Wayne, PA	2.3 – 2.5	1,378
Pipeline Bog, Core Habitat of Natural Heritage Areas	Wayne, PA	3.1 – 3.5	2,165
Mushpaugh Sportsmen's Associations, private hunting camp	Pike, PA	3.3 – 3.8	1,363
Supporting LCA	Pike, PA	3.7 – 3.9	1,320
Forest Lake Park, hunting club	Pike, PA	4.3 – 5.5	6,717
Supporting LCA	Pike, PA	4.5 – 4.7	792
Supporting LCA	Pike, PA	5.1 – 5.2	739
Little Teedyuskung Lake, Core Habitat of Natural Heritage Areas	Pike, PA	5.7 – 6.7	2,798
Supporting LCA	Pike, PA	5.7 - 8.1	6,758
Delaware Highlands Conservancy	Pike, PA	6.2 – 6.7	2,251
Teedyuskung Lake, Core Habitat of Natural Heritage Areas	Pike, PA	6.4 – 6.6	0 [a]
Supporting LCA	Pike, PA	9.8 - 10.9	3,538
Lackawaxen River at Rowland, Core Habitat of Natural Heritage Areas	Pike, PA	9.9 – 11.0	1,742
Upper Delaware Scenic River, Important Bird Areas	Pike, PA	10.2 – 12.6	6,653
Bicycle Trail/Route	Pike, PA	10.5	10
Railroad crossing –now privately owned	Pike, PA	10.6	150
Supporting LCA	Pike, PA	12.2 – 12.6	845
State Game Land 116	Pike, PA	12.8 – 12.9	520
Wildlife Management Unit 3D	Pike, PA	0.0 – 12.91	68,164
Appalachian Landscape Conservation Cooperative (FWS)	Pike, PA	0.0 – 12.91	68,164

[a] These areas are not crossed by the pipeline centerline, but are in the construction right-of-way.

The proposed pipeline is adjacent to Wayne County Park near MP 0.0. The pipeline would not cross the park and would be approximately 0.2 mile from the park's athletic fields; however, a permanent access road would cross the park approximately 50 feet north of the historic school house. TGP would install security fencing for 100 feet on either side of this structure during construction.

The Project would also cross one parcel that has a private conservation easement, held by the Delaware Highlands Conservancy, from MPs 6.2 to 6.7. The easement covers approximately 110 acres, for the purpose of ensuring that the property will remain forest land and farmland and will maintain a natural wildlife habitat for native fauna. While the Project would result in some temporary impacts during construction, impacts would be minimized by co-locating the pipeline adjacent to the existing 300 Line system, and using existing permanent easement where possible for construction workspace. Following Project construction, agricultural areas would be returned to their original use. TGP is in discussion with the Delaware Highlands Conservatory to develop a mitigation plan to address any permanent impacts on conservation lands resulting from the expanded permanent right-of-way within the conservatory.

The pipeline would cross the Lackawaxen River approximately 1 mile downstream of Rowland, Pennsylvania, and approximately 3 miles upstream of the confluence with the Delaware River. The Delaware River in this area (referred to as the Upper Delaware River) is designated as a National Scenic River and National Recreational River, pursuant to the National Wild and Scenic Rivers Act (16 USC 1281e). The National Scenic and Recreational designation "protects, conserves, and enhances the free-flowing character, exceptionally high water quality, and the scenic, recreational, ecological, cultural, and geological values of the Upper Delaware River (NPS, n.d.). The Lackawaxen River is also valued for its recreational, historic, scenic, and natural resources (Pike County, 2008).

As described in Section A.6.1.6, TGP proposes to cross the Lackawaxen River using a dry cofferdam crossing method. This method would dam the immediate trench area, approximately half of the river at a time, with total construction lasting 60 to 75 days. This construction method would allow for continual on-water recreational activity during construction. In general, the Lackawaxen River crossing could discourage some recreational activity during construction due to the presence of construction activity in the water. Following construction, the entire width of the Lackawaxen River would be available for on-water recreation, and recreational activity would return to preconstruction conditions. Recreation on the Delaware River would not be affected.

The Lackawaxen River crossing would result in temporary visual impacts, which are discussed in section B.4.3.1. In general, while some river users may object to the visual disturbance at the Lackawaxen River crossing during and immediately following construction, these changes in visual conditions (including a widening of the gap in forests along the river banks) are unlikely to significantly change the level of recreational use of the Lackawaxen River overall, or in the Project vicinity.

We received a comment regarding potential impacts from Project construction and operation on services in the vicinity of the Project area and impacts to recreation and tourism based due to the crossing of the Lackawaxen River. The Project may have some minor impacts on local services during construction; however, these impacts would be temporary.

As discussed in section B.2.1, impacts on water resources due to sedimentation from construction would be minor and temporary. While sediment could reach the Delaware River, approximately 3 miles downstream, sedimentation is unlikely to be substantial enough to affect recreation due to the use of a dry crossing method, the temporary nature of construction activity at the crossing, and the distance from the crossing site.

Based on the proposed crossing method and mitigation measures included in TGP's Procedures, we conclude that there would be no recreational impacts on the Delaware National Scenic and Recreational River, and that the recreational impacts on the Lackawaxen River would be temporary and would return to preconstruction levels following restoration activities. However, as described in section B.2.1, the NPS has commented that it intends to review the crossing of the Lackawaxen River under the

Wild and Scenic Rivers Act. This review would need to be completed prior to issuance of a USACE permit for the Project authorizing crossing of the Lackawaxen River.

The pipelines would cross 19 properties associated with the Pennsylvania Department of Agriculture's Clean and Green Program, as shown in table B.4-7. In addition, the proposed Pipe Yard No. 2 would be on property enrolled in the Clean and Green Program.

The Clean and Green Program was created under the Pennsylvania Farmland and Forest Land Assessment Act with the goal of preserving agricultural and forested lands. The program provides a tax incentive to individuals participating in the program by taxing the property on the "use value" of the land rather than its market value. Property owners are thus able to realize a modest tax savings by preserving forest or agricultural land.

In order to qualify for the program, landowners must have a minimum of 10 acres of contiguous agricultural, open, or forested land. Because the tracts of lands that would be crossed by the Project were already fragmented by the 300 Line, construction of the Orion Project would not result in new forest fragmentation. While open and agricultural lands would revert to their previous use following construction, there would be some permanent loss of forested lands. While lands devoted to "subsurface transmission and gathering" of natural gas may still receive the state's preferential tax rates (Pa. Code 137b.73a), if clearing were to reduce the amount of contiguous forested lands to less than 10 acres, the Project could result in disqualification of some properties from the Clean and Green Program. This would result in a long-term financial impact on the affected property owner. In such a case, TGP proposes to compensate Clean and Green Program property landowners.

TABLE B.4-7

Pennsylvania Department of Agriculture Clean and Green Properties Crossed by the Project

Township	County	Approximate Mileposts	Land Use[a]
Berlin	Wayne	Pipe Yard No. 2	Agriculture
Berlin	Wayne	0.0	Agriculture/Open
Berlin	Wayne	0.5	Agriculture/Open
Berlin	Wayne	1.1	Open/Forest
Berlin	Wayne	1.5	Open/Forest/Wetland
Berlin	Wayne	1.6	Open/Forest/Wetland
Berlin	Wayne	2.0	Open/Forest
Berlin	Wayne	3.0	Open/Forest
Berlin	Wayne	3.6	Open/Forest/Wetland
Palmyra	Wayne	4.5	Open/Forest/Wetland
Lackawaxen	Pike	5.8	Open/Forest/Wetland
Lackawaxen	Pike	6.4	Forest/Wetland
Lackawaxen	Pike	6.8	Forest
Lackawaxen	Pike	7.1	Forest/Wetland
Lackawaxen	Pike	7.7	Forest/Wetland
Lackawaxen	Pike	7.9	Forest/Wetland
Lackawaxen	Pike	10.1	Open
Lackawaxen	Pike	11.5	Open/Forest
Lackawaxen	Pike	12.4	Open/Forest

[a] Based on aerial imagery on alignment sheets. Includes temporary and permanent right-of-way, as well as ATWS.

To ensure that construction does not affect the continued eligibility of parcels currently enrolled in the Clean and Green Program, **we recommend that**:

- **<u>Prior to construction</u>, TGP should file with the Secretary, for the review and written approval of the Director of the OEP, a plan to minimize Project-related tree clearing on each parcel of land enrolled in the Clean and Green Program that contains a forested component. This plan should demonstrate how Project construction and operation would not affect the property's eligibility in the program. In the event TGP is not able to avoid disqualifying a property from the program, TGP should describe how it would compensate the affected landowner.**

As discussed above, the Project will cross some special use areas, including natural heritage areas, trails, LCAs, and private recreational lands. Construction of the pipeline may create minor temporary impacts on these areas, such as temporary interruption of recreational activities along the right-of-way. Permanent impacts from pipeline operation would generally be limited to the removal of trees along the permanent right-of-way. TGP states that it has notified all affected landowners, and has proposed the following management and mitigation measures:

- maintaining consultation with the PAGC, obtaining licenses to cross PAGC lands, and adhering to PAGC requirements such as providing notice of construction and using specified plant and seed mixes during restoration;

- establishing agreements regarding safety and compensation to summer camps for effects on recreational activities;

- not windrowing rock or leaving cut trees along the right-of-way unless approved in writing by the landowner; and

- Implementing BMPs, including erosion control devices, in construction workspaces to avoid and minimize any impacts on Pennsylvania Natural Heritage Program Core Habitat Areas, LCAs, and other natural areas of local significance.

No other recreational areas, scenic vistas, national trails, or other federally administered lands were identified within the Project area. We conclude that recreational opportunities and special interest areas would not be significantly affected by the Project.

4.3 Visual Resources

4.3.1 Pipeline Facilities

The primary impacts of the pipeline facilities on visual resources would occur during active construction and would affect forest, open lands, and wetlands. The impacts would include the presence of construction equipment, materials, and personnel, and disturbance of vegetation and soils. These construction impacts would be temporary, as construction would take approximately 12 to 18 months, likely culminating in June 2018. During restoration of the disturbed areas, the rights-of-way would be characterized by mixed areas of new vegetation and bare soils. It is expected that revegetation of the rights-of-way would begin in the summer of 2018.

Following construction, TGP would fully restore all disturbed areas. The visual appearance of these areas would return to their preconstruction conditions within 2 to 3 years in open lands and emergent wetlands. Scrub-shrub wetlands may take longer than 3 years to return to preconstruction

conditions. Construction would have a permanent impact on some forested lands. Forested lands cleared for ATWS and the temporary construction corridor could take up to 30 to 50 years to return to their preconstruction conditions depending on availability of nutrients and water during the restoration period. Furthermore, clearing of forested lands for the permanent easement would result in a permanent visual change, as these areas would be maintained in an herbaceous state.

As described in section B.4.2, the Lackawaxen River is valued for its scenic and recreational resources (among other characteristics). The river's visual setting contributes to recreational experiences. Visual conditions along the Lackawaxen River would primarily be affected during the 60- to 75-day construction period associated with the river crossing, which is further described in sections A.6.1 and B.2.1. As with other areas affected by the Project, trees along the riverbank would be permanently removed from the Project's permanent right-of-way. This would expand the gap in forests created by the existing right-of-way. Non-woody vegetation would be restored to preconstruction conditions along the riverbanks within 2 to 3 years following restoration activities.

Because the Project's crossing of the Lackawaxen River is more than 3 miles upstream of the Upper Delaware National Scenic and Recreational River, temporary increases in turbidity and sedimentation in the Lackawaxen River are unlikely to be noticeable at the Delaware River confluence. As a result, there would be no impact on the scenic or recreational character of the Delaware River.

TGP proposes to use 25 feet of existing right-of-way associated with the existing permanent easement of the 300 Line system and to add 25 feet of new permanent easement. These areas are already subject to the visual impact of a utility corridor. Clearing of forested lands adjacent to the existing 300 Line would widen the corridor by 25 feet. We conclude that locating the proposed pipelines adjacent to the 300 Line or other rights-of-way would not result in significant adverse effects on visual resources.

4.3.2 Aboveground Facilities

The aboveground facilities associated with the Project would represent minimal change in visual conditions. All of the aboveground facilities associated with the Project would be within the property boundaries of Compressor Station 323, an existing industrial facility owned by TGP, or within the proposed pipeline's permanent right-of-way.

Proposed construction at existing Compressor Station 323 includes rewheeling/restaging of an existing compressor to accommodate increased volumes and changes in station suction pressures. In addition, the southern portion of the existing fence would be moved approximately 25 feet to the southwest and would overlap the new permanent pipeline right-of-way to enclose and protect the new aboveground piping within Compressor Station 323. These activities would disturb less than 0.1 acre of land, all of which is within the existing property boundary. This facility currently has an existing visual impact on the surrounding areas depending on the direction and viewpoint from which it is seen. By locating the proposed facilities next to existing structures, the visual impact would generally be minimized.

Proposed construction of a new pig launcher and crossover/connecting facilities to the existing TGP 300 Line at the beginning of Loop 322, as well as a pig receiver and crossover/connecting facilities to the existing TGP 300 Line at the end of Loop 323, would occur within the permanent right-of-way and would disturb approximately 0.4 acre. By locating these facilities within the permanent right-of-way, the visual impact would generally be minimized. While the proposed facilities may constitute a visual change to the immediate surrounding area, their construction would generally be consistent with the existing land use and would not significantly modify the character of this area.

TGP has not proposed any new visual screening for its aboveground facilities; however, it would leave existing trees and vegetation in place along roadways to buffer the view of the new buildings and pig receiver from motorists. To a casual observer or passerby, it is not expected that any significant visual changes would be perceptible once the new facilities are constructed/installed.

5. CULTURAL RESOURCES

Section 106 of the National Historic Preservation Act, as amended, requires FERC to take into account the effects of its undertakings on properties listed or eligible for listing in the National Register of Historic Places (NRHP), and to afford the Advisory Council on Historic Preservation an opportunity to comment. TGP, as a non-federal party, is assisting us in meeting our obligations under Section 106 and its implementing regulations at 36 CFR 800.

TGP completed an initial and a supplemental cultural resource survey for archaeological resources for the Project. The initial survey included a 400-foot-wide pipeline corridor, ATWS, pipe/contractor yards, access roads, and aboveground facilities. The supplemental survey included ATWS, water withdrawal locations, access road extensions, and a 400-foot-wide corridor for pipeline segments that had previously been denied access. Survey methods included background research, pedestrian survey, and shovel testing. The results of the initial survey were documented in the *Phase I Archaeological Investigations Report, Orion Project* (Stuck et al., September 2015), and the results of the supplemental survey were documented in the *Addendum Phase I Archaeological Investigations Report, Orion Project* (Stuck and Johnston, 2016). A total of approximately 713.3 acres was surveyed (653.0 acres for the initial survey and 60.3 acres for the supplemental survey). TGP provided both reports to FERC and the Pennsylvania State Historic Preservation Office (SHPO).

Five archaeological sites were identified by the initial survey, including three prehistoric sites (36PI0264, 36PI0265, and 36PI0266), one prehistoric/historic isolate (36PI0267), and one historic site (36PI0268). Sites 36PI0264 and 36PI0265 were recommended to be of undetermined eligibility for the NRHP. The other three sites were recommended as not eligible for the NRHP. The report indicated that the Project was modified to avoid site 36PI0264, and that site 36PI0265 would be avoided by boring beneath the site. In a letter dated October 27, 2015, the SHPO concurred with the report's recommendations, but requested some revisions to the report, which TGP provided in a final version of the report (April 2016). TGP has not yet filed the SHPO's comments on the Final Phase I report.

No archaeological sites were identified by the supplemental survey. A portion of the NRHP-eligible White Mills Industrial Historic District was identified adjacent to two proposed hydrostatic test water withdrawal areas. Because there were no buildings associated with the district within these work areas, and work activities would be temporary and involve no ground disturbance or removal of trees, the addendum report recommended there would be no adverse effects on the district. In addition, due to landowner restrictions, approximately 0.26 mile of the pipeline route was not surveyed, but because the majority of this area had been previously surveyed and Project impacts would be limited to the previously surveyed area, no further work was recommended. In a letter dated June 2, 2016, the SHPO concurred that Project activities would have no adverse effects on the White Mills Industrial Historic District, and that no further archaeological work is necessary within the surveyed areas.

TGP also completed a historic architecture survey for the Project, which included all areas from which there existed a view to or from the proposed right-of-way for the pipeline corridor, aboveground facilities, access roads, staging areas, and pipe/contractor yards. The survey identified seven new historic (i.e., pre-1964) structures (a school house, camp buildings, and residential structures) and three small structures (all sheds) of unknown date. The survey also identified 33 stone fence segments/rock areas. The *Phase I Historic Resources Survey Report, Orion Project* (Peltier and Villacorta, 2015) was

submitted to FERC and the SHPO. The report recommended all 10 structures as not eligible for the NRHP, and that the rock features contained little integrity. In a letter dated October 14, 2015, the SHPO requested additional information, which TGP provided. In a letter dated June 10, 2016, the SHPO concurred that the Project would have no effect on historic properties and that no additional investigation of aboveground historic resources is necessary.

In March 2016, a cultural resources survey was completed of the Lackawaxen Creek Restoration Site, which consists of two parcels totaling 29.3 acres. No archaeological sites or aboveground historic resources were identified by the survey. The *Phase I Cultural Resources Survey of Lackawaxen Creek Restoration Site* (Tyrer and Muir, 2016) was submitted to FERC and the SHPO. TGP has not yet provided the SHPO's comments on the report. Therefore, **we recommend that**:

- **TGP not begin construction of facilities and/or use of staging, storage, or temporary work areas and new or to-be-improved access roads <u>until</u>:**
  - **TGP files with the Secretary the Pennsylvania SHPO's comments on the:**
    - **(1) Final Phase I Archaeological Investigations Report; and**
    - **(2) Phase I Cultural Resources Survey Report for the Lackawaxen Creek Restoration Site.**
  - **The FERC staff reviews and the Director of OEP approves the cultural resources reports and notifies TGP in writing that construction may proceed.**

All materials filed with the Commission containing location, character, and ownership information about cultural resources must have the cover and any relevant pages therein clearly labeled in bold lettering: "CONTAINS PRIVILEGED INFORMATION - DO NOT RELEASE."

In letters dated April 30, 2015, TGP provided information on the proposed Project to the following Native American tribes with historic ties to the region: Absentee-Shawnee Tribe of Oklahoma, Delaware Nation, Delaware Tribe of Indians, Eastern Shawnee Tribe of Oklahoma, Shawnee Tribe, St. Regis Mohawk Tribe, and Stockbridge-Munsee Community Band of Mohican Indians. TGP also conducted follow-up phone calls with the tribes.

In a letter dated May 15, 2015, the Stockbridge-Munsee Tribal Historic Preservation Office responded to FERC that the Project area in Pike County is within the tribe's area of interest, and that the tribe wished to consult on this portion of the Project. The tribe requested a copy of the archaeological testing methodology, and requested that the tribe's Inadvertent Discovery Policy be incorporated into the Project's Unanticipated Discoveries Plan. The tribe also requested 1-week prior notification of archaeological excavations so it could consider sending a tribal monitor to participate. TGP provided the proposed archaeological testing methodology to the tribe on May 18, 2015. The tribe concurred with the methodology but requested additional information regarding the Project's archaeological sensitivity assessment, which TGP provided on June 4, 2015. TGP also provided the tribe with avoidance plans for sites 36PI0264 and 36PI0265. The tribe concurred with the plans on October 20, 2015.

The Delaware Tribe Historic Preservation Representative responded to TGP's letter with additional requirements to complete its review, which were provided by TGP.

The St. Regis Mohawk Tribe stated in a phone conversation that it had no concerns regarding the Project area.

We sent our NOI, Supplemental NOI, and follow-up letters to the same seven tribes. No responses to our NOIs or letters have been received.

TGP provided FERC and the SHPO with an Unanticipated Discovery Plan to address the unexpected discovery of archaeological resources and human remains during construction. We have reviewed the plan and found it acceptable.

In letters dated April 22, 2016, TGP provided information on the Lackawaxen Creek Restoration Site to the following Native American tribes with historic ties to the region: the Absentee-Shawnee Tribe of Oklahoma, Delaware Nation, Delaware Tribe of Indians, Eastern Shawnee Tribe of Oklahoma, Shawnee Tribe, St. Regis Mohawk Tribe, and Stockbridge-Munsee Community Band of Mohican Indians.

In an e-mail dated May 26, 2016, the Eastern Shawnee Tribe responded that it has no concerns regarding the Lackawaxen Creek Restoration Site, but requested notification of unanticipated discoveries.

In response to our NOI, we received comments from the NPS regarding potential impacts on the Delaware Aqueduct and the Zane Grey Museum. These two NRHP-listed resources are approximately 1.5 to 2.0 miles from the Project, and therefore, would not be affected.

6. AIR QUALITY AND NOISE

6.1 Air Quality

Air quality would be affected by construction and operation of the Project. During construction of the Project, short-term emissions would be generated by operation of equipment, land disturbance, and increased traffic from worker and delivery vehicles. Operation of the new facilities of Compressor Station 323 and pipeline facilities would result in minimal long-term air emissions, as presented below.

6.1.1 Existing Air Quality

Although Pennsylvania lies entirely within the humid continental zone, its climate varies according to region and elevation. The regions with the warmest temperatures and longest growing seasons are the low-lying southwest Ohio valley and the Monongahela valley in the southeast. The region bordering Lake Erie also has a long growing season, as the moderating effect of the lake prevents early spring and late autumn frosts. The first two areas have hot summers, while the Lake Erie area is more moderate. The rest of the state, at higher elevations, has cold winters and cool summers. The Project area experiences average annual precipitation of 38.4 inches and average daily temperatures range from about 80 °F in January to 12 °F in July. The average wind speed in the Project area is 5.55 miles per hour (blowing from the southwest).

The EPA has established National Ambient Air Quality Standards (NAAQS) for criteria pollutants for the purpose of protecting human health (primary standards) and public welfare (secondary standards).[12] The EPA set NAAQS for the following air contaminants designated as "criteria pollutants": nitrogen dioxide, carbon monoxide, ozone, sulfur dioxide, lead, particulate matter with an aerodynamic

[12] The current NAAQS are listed on EPA's website at http://www.epa.gov/air/criteria.html.

diameter less than or equal to 10 microns (PM_{10}), and particulate matter with an aerodynamic diameter less than or equal to 2.5 microns ($PM_{2.5}$). These NAAQS reflect the relationship between pollutant concentrations and health and welfare effects, and are supported by sound scientific evidence. The states implement and enforce the NAAQS through State Implementation Plans (SIPs), which must be approved by the EPA. The State of Pennsylvania implements its SIP through the PADEP.

Air quality control regions (AQCR) are areas established for air quality planning purposes in which SIPs describe how ambient air quality standards would be achieved and maintained. AQCRs were established by the EPA and local agencies in accordance with Section 107 of the Clean Air Act of 1970 and its amendments, as a means to implement the Clean Air Act and comply with the NAAQS through SIPs. The Clean Air Act is the basic federal statute governing air pollution. AQCRs are intra- and interstate regions such as large metropolitan areas where improvement of the air quality in one portion of the AQCR requires emission reductions throughout the AQCR. Each AQCR, or portion thereof, is designated based on compliance with the NAAQS. AQCR designations fall under three categories as follows: "attainment/unclassifiable" (areas in compliance with the NAAQS or not able to be classified on the basis of available information as meeting or not meeting the NAAQS), "nonattainment" (areas not in compliance with the NAAQS), or "maintenance" (areas that are currently in attainment but were previously classified as nonattainment and are afforded additional protection to ensure that they remain in attainment).

An Ozone Transport Region is a region where the transfer of air pollutants from one or more states contributes significantly to a violation of the NAAQS in one or more other states.[13] The Northeast Ozone Transport Region is comprised of 11 northeastern states, including Pennsylvania. Emissions in this region are subject to more stringent permitting requirements, and various regulatory thresholds are lower for the pollutants that form ozone, even if they meet the ozone NAAQS.

Wayne and Pike Counties are in the Northeast Pennsylvania – Upper Delaware Valley Interstate AQCR.[14] Both counties are in attainment with the NAAQS. We received a comment regarding general conformity for federal actions. Because the Project is in areas considered in attainment with the NAAQS, general conformity does not apply to the Project.

The EPA now defines air pollution to include the mix of six long-lived and directly emitted greenhouse gases (GHGs), finding that the presence of the following GHGs in the atmosphere may endanger public health and welfare through climate change: carbon dioxide (CO_2), methane (CH_4), nitrous oxide (N_2O), hydrofluorocarbons, perfluorocarbons, and sulfur hexafluoride. As with any fossil-fuel fired project or activity, the Project would contribute GHG emissions. The principle GHGs that would be emitted by the Project are CO_2, CH_4, and N_2O. No fluorinated gases would be emitted by the Project. GHG emissions are quantified and regulated in units of CO_2 equivalents (CO_2e). The CO_2e takes into account the global warming potential (GWP) of each GHG. The GWP is a ratio relative to CO_2 of a particular GHG's ability to absorb solar radiation as well its residence time within the atmosphere. Thus, CO_2 has a GWP of 1, CH_4 has a GWP of 25, and N_2O has a GWP of 298.[15] Impacts from GHG emissions (i.e., climate change) are discussed in more detail in section B.8.2.5.

---

[13] 42 USC 85, part D, subpart 1, section 7506(a).

[14] These data are provided in 40 CFR 81, subpart C, section 107 – Attainment Status Designations.

[15] These GWPs are based on a 100-year time period. We have selected their use over other published GWPs for other timeframes because these are the GWPs the EPA has established for reporting of GHG emissions and air permitting requirements. This allows for a consistent comparison with these regulatory requirements.

6.1.2 Permitting/Regulatory Requirements

The Clean Air Act, as amended in 1977 and 1990, is the basic federal statute governing air pollution. Federal air quality permitting regulations apply only to stationary sources. As the air emissions associated with Project construction are principally from mobile construction activities, the sources associated with the construction phase of the Project would not be subject to federal air quality permits.

Greenhouse Gases

On September 22, 2009, the EPA issued the final Mandatory Reporting of Greenhouse Gases Rule. It requires reporting of GHG emissions from suppliers of fossil fuels and facilities that emit greater than or equal to 25,000 metric tons[16] of GHGs per year. On June 3, 2010, the EPA tailored the applicability criteria for stationary sources and modification projects.[17] The GHG reporting rule does not apply to construction emissions; however, we have included them here for disclosure purposes. The estimated annual GHG emissions associated with the operation of the Project are well below the EPA reporting limit of 25,000 metric tons per year. TGP may be required to submit a GHG report based on the aggregate CO_2e emissions associated with pipeline fugitive emissions from its entire pipeline system, in which case the fugitive GHG emissions associated with the Project would be included in the GHG report.

State Air Quality Regulations

Pennsylvania has adopted the NAAQS but maintains additional air quality standards under Pa. Code Title 25. Fugitive emissions regulations are outlined in 25 Pa. Code 123.1. For accepted fugitive emissions activities/sources, which include construction of buildings, clearing of land, and stockpiling of material, this section states that the following requirements must be met: 1) the emissions are of minor significance with respect to causing air pollution, and 2) the emissions are not preventing or interfering with the attainment or maintenance of an ambient air quality standard.

The fugitive gas emissions associated with the Project modifications (new piping, pig launcher, and receiver) are estimated to be less than 0.1 ton per year of VOCs. This increase in emissions does not exceed the *de minimis* threshold of 1.0 ton per year of VOCs; therefore, these minor modifications are exempt from PADEP's Plan Approval requirement per 25 Pa. Code 127.14(b) and 127.449. Because the emissions associated with the Project modifications are considered to be *de minimis* and exempt from permitting requirements, a quantitative impact assessment of air quality impacts is not required. On October 19, 2015, PADEP granted TGP's request for exemption and determined that a Plan Approval was not required.

TGP would also be required to comply with 25 Pa. Code 123.1, regarding fugitive dust emissions. Additionally, TGP would ensure compliance with Title 35 of Pennsylvania Statutes, Chapter 23B, commonly referred to as Act 124 or the Diesel-Powered Motor Vehicle Idling Act, which restricts most diesel-powered motor vehicles over 10,000 pounds from idling more than 5 minutes in any continuous 60-minute period, with some exemptions.

---

[16] A metric ton is 2,205 pounds, or approximately 1.1 tons.

[17] 75 Federal Register 31-514

6.1.3 Air Quality Construction Impacts and Mitigation

Emissions associated with construction activities generally include exhaust from construction equipment and commuting vehicles; fugitive dust associated with vehicle movement at the Project sites; fugitive dust associated with trenching, backfilling, and other earth-moving activities; and venting of natural gas to the atmosphere. Exhaust emissions would depend on the equipment used and the horsepower-hours of operation. The quantity of fugitive dust emissions would depend on the moisture content and texture of the soils disturbed.

Construction of TGP's pipeline, which would include one or more mainline spreads and various smaller tie-in crews, would last approximately 12 to 18 months depending upon site-specific conditions. A summary of the Project's potential construction emissions is presented in table B.6-1.

TABLE B.6-1

Construction Emissions Summary (tons per year)

Source	CO [a]	NO_x [b]	SO_2 [c]	VOC	PM/PM_{10}	$PM_{2.5}$	HAPs [d]	CO_2e
2017								
Fugitive dust	–	–	–	–	33.8	6.1	–	–
Non-road engines	16.7	17.2	<0.1	1.9	1.2	1.2	0.5	4,858
On-road engines	4.5	0.6	<0.1	0.1	<0.1	<0.1	<0.1	1,887
Venting	–	–	–	<0.1	–	–	–	230
Total 2017	**21.2**	**17.8**	**<0.1**	**2.0**	**35.0**	**7.3**	**0.5**	**6,975**
2018								
Fugitive dust	–	–	–	–	16.5	2.4	–	–
Non-road engines	11.1	11.5	<0.1	1.2	0.8	0.8	0.3	3,226
On-road engines	2.2	0.3	<0.1	<0.1	<0.1	<0.1	<0.1	1,151
Venting	–	–	–	–	–	–	–	–
Total 2018	**13.3**	**11.7**	**<0.1**	**1.3**	**17.3**	**3.2**	**0.3**	**4,377**

[a] CO = carbon monoxide
[b] NO_x = nitrous oxides
[c] SO_2 = sulfur dioxide
[d] HAPs = hazardous air pollutants

As described above, TGP would be required to comply with 25 Pa. Code 123.1, which regulates fugitive dust emissions. In order to minimize fugitive dust emissions, TGP has committed to implementing mitigation measures such as

- applying water or dust suppressants to disturbed areas, as necessary;
- covering open hauling trucks with tarps, as necessary;
- using paved roads for construction and vehicle traffic, wherever practical;
- limiting vehicle speeds as deemed necessary by the EI;
- responding promptly to any particulate emission concerns that occur during construction by evaluating the source of emissions; and
- stabilizing disturbed areas upon completion of construction activity.

Emissions from construction equipment exhaust would be temporary in nature. Once construction activities in the Project area are completed, fugitive dust and construction vehicle/equipment emissions associated with the pipeline and auxiliary facilities would return to preconstruction levels.

Therefore, we conclude that emissions associated with the construction phase of the Project would not result in a significant impact on local air quality.

6.1.4 Air Quality Operations Impacts and Mitigation

The Project would not generate any significant air emissions during operations. No new facilities containing stationary emission sources would be constructed, no new emission generating units would be added to existing facilities, and no existing emission generating units would be modified as part of the Project.

The Project would generate a minor amount of new fugitive emissions associated with new pipeline and associated components. During operations, fugitive emissions associated with minor new piping and the pig launcher and receiver would be a result of natural gas leaks from the sealed surfaces of the components (e.g., valves and flanges), and from venting of the gas in the launcher/receiver during pigging operations. A summary of the Project's potential operational emissions is presented in table B.6-2.

TABLE B.6-2

Operational Emissions Summary (tons per year)

Source	VOC	CO_2	CH_4	CO_2e
Pipeline Fugitives	<0.1	<0.1	0.2	4
Pigging Operations	<0.1	<0.1	4.0	101
Total	**<0.1**	**<0.1**	**4.2**	**105**

6.2 Noise

The Project would contribute to noise in the Project area principally during the 18 months of proposed construction. Due to natural and anthropogenic influences such as weather conditions, seasonal vegetation cover, and human activity, the magnitude and frequency of environmental noise may vary considerably over the course of a day and throughout the year.

6.2.1 Noise Regulations

The State of Pennsylvania, Wayne and Pike Counties, and all affected townships (Berlin, Palmyra, and Lackawaxen) do not have any noise requirements directly applicable to the Project (i.e., numerical noise limits for industrial land uses). Palmyra Township's Nuisance Ordinance Number 96-2005 prohibits excessive noise, including noise from tools, vehicles, and equipment that could cause injury, damage, hurt, inconvenience, annoyance, or discomfort to others due to intensity, frequency, duration, location, lack of shielding, or other reasons. The restriction is qualitative and contains no numerical decibel limits directly applicable to the Project.

6.2.2 Construction Noise

Construction activities associated with the Project would be performed with standard heavy equipment such as track-excavators, backhoes, bulldozers, dump trucks, and cement trucks. The most prevalent sound source during construction would be internal combustion engines used to power the construction equipment. Construction activities would temporarily increase ambient sound levels in the immediate vicinity of the aboveground facility construction sites, while noise associated with pipeline construction for the Project would be transitory in nature. TGP would limit most construction activities to daytime hours (between 7:00 AM and 10:00 PM), with the exception of the operating water pumps during hydrostatic testing, which would occur continuously until hydrostatic testing is complete.

Blasting may be needed if hard rock is encountered along the proposed route that cannot be loosened or fractured by other means. The need for blasting would be determined by the construction contractors on a site-specific basis at the time of construction. If blasting should become necessary, TGP has submitted an acceptable Project-specific blasting plan that establishes procedures and safety measures that TGP's contractor would be required to follow while implementing blasting activities. In addition, TGP would follow the measures listed in section B.1.1.1, including preparing site-specific blasting plans for each area where blasting would be required and notifying nearby landowners prior to blasting activities.

In order to minimize elevated sound levels due to construction activities, TGP has committed to implementing the following mitigation measures to the extent practicable:

- Limiting general construction activities to the hours between 7:00 AM and 10:00 PM and, if construction activities are scheduled during nighttime hours, limiting such activities to "quiet" operations;
- advising nearby residents of significant noise-causing activities;
- establishing and enforcing construction site and access road speed limits during the construction period;
- using electrically powered equipment instead of pneumatic or internal combustion powered equipment, where feasible;
- fitting all internal combustion engines with appropriate muffler systems and ensuring they are working properly;
- locating material stockpiles and mobile equipment staging, parking, and maintenance areas as far as practicable from noise-sensitive receptors; and
- limiting use of noise-producing signals, including horns, whistles, alarms, and bells to safety warning purposes only.

Based on the temporary nature of construction activities and TGP's proposed mitigation measures, we conclude that there would be no significant noise impacts during construction of the Project.

6.2.3 Operational Noise

The operation of the Project is not anticipated to result in noticeable changes to the existing maximum operational noise associated with TGP's pipeline system. The minor modifications to Compressor Station 323, including rewheeling/restaging Compressor 2A and installation of appurtenant and auxiliary facilities, would not increase the noise level any nearby noise-sensitive areas for the following reasons:

- The Project would not increase the total horsepower of the station.
- The Project would add an additional blow-down silencer; however, this equipment would not increase the noise of normal operation.
- The limited aboveground piping changes associated with the Project are not anticipated to increase operational noise at any noise-sensitive areas.

We conclude that the operational noise from the Project would not cause a perceptible increase to existing noise levels in the Project area.

7. RELIABILITY AND SAFETY

The transportation of natural gas by pipeline involves some incremental risk to the public due to the potential for accidental release of natural gas. The greatest hazard is a fire or explosion following a major pipeline rupture.

Methane, the primary component of natural gas, is colorless, odorless, and tasteless. It is not toxic, but is classified as a simple asphyxiate, possessing a slight inhalation hazard. If breathed in high concentration, oxygen deficiency can result in serious injury or death.

Methane has an auto-ignition temperature of 1,000 °F and is flammable at concentrations between 5.0 and 15.0 percent in air. An unconfined mixture of methane and air is not explosive; however, it may ignite and burn if there is an ignition source. A flammable concentration within an enclosed space in the presence of an ignition source can explode. Methane is buoyant at atmospheric temperatures and disperses rapidly in air.

7.1 Safety Standards

The DOT is mandated to prescribe minimum safety standards to protect against risks posed by pipeline facilities under 49 USC 601. The DOT's Pipeline and Hazardous Materials Safety Administration (PHMSA) administers the national regulatory program to ensure the safe transportation of natural gas and other hazardous materials by pipeline. It develops safety regulations and other approaches to risk management that ensure safety in the design, construction, testing, operation, maintenance, and emergency response of pipeline facilities. Many of the regulations are written as performance standards that set the level of safety to be attained and allow the pipeline operator to use various technologies to achieve safety. The PHMSA's safety mission is to ensure that people and the environment are protected from the risk of pipeline incidents. This work is shared with state agency partners and others at the federal, state, and local level.

Title 49 USC 601 provides for a state agency to assume all aspects of the safety program for intrastate facilities by adopting and enforcing the federal standards. A state may also act as the DOT's agent to inspect interstate facilities within its boundaries; however, the DOT is responsible for enforcement actions.

For the Project, the State of Pennsylvania does not have delegated authority to inspect interstate pipeline facilities.

The DOT pipeline standards are published in 49 CFR 190–199. Part 192 specifically addresses natural gas pipeline safety issues.

Under a Memorandum of Understanding on Natural Gas Transportation Facilities dated January 15, 1993, between the DOT and FERC, the DOT has the exclusive authority to promulgate federal safety standards used in the transportation of natural gas. Section 157.14(a)(9)(vi) of FERC's regulations require that an applicant certify that it will design, install, inspect, test, construct, operate, replace, and maintain the facility for which a Certificate is requested in accordance with federal safety standards and plans for maintenance and inspection. Alternatively, an applicant must certify that it has been granted a waiver of the requirements of the safety standards by the DOT in accordance with Section 3(e) of the Natural Gas Pipeline Safety Act. FERC accepts this certification and does not impose

additional safety standards. If the Commission becomes aware of an existing or potential safety problem, there is a provision in the Memorandum to promptly alert the DOT. The Memorandum also provides for referring complaints and inquiries made by state and local governments and the general public involving safety matters related to pipelines under the Commission's jurisdiction.

FERC also participates as a member of the DOT's Technical Pipeline Safety Standards Committee, which determines if proposed safety regulations are reasonable, feasible, and practicable.

The pipeline and aboveground facilities associated with the Project must be designed, constructed, operated, and maintained in accordance with the DOT Minimum Federal Safety Standards in 49 CFR 192. The regulations are intended to ensure adequate protection for the public and to prevent natural gas facility accidents and failures. The DOT specifies material selection and qualification; minimum design requirements; and protection from internal, external, and atmospheric corrosion.

The DOT also defines area classifications, based on population density in the vicinity of the pipeline, and specifies more rigorous safety requirements for populated areas. The class location unit is an area that extends 220 yards on either side of the centerline of any continuous 1-mile length of pipeline. The four area classifications are defined below:

Class 1	Location with 10 or fewer buildings intended for human occupancy.
Class 2	Location with more than 10 but less than 46 buildings intended for human occupancy.
Class 3	Location with 46 or more buildings intended for human occupancy or where the pipeline lies within 100 yards of any building, or small well-defined outside area occupied by 20 or more people on at least 5 days a week for 10 weeks in any 12-month period.
Class 4	Location where buildings with four or more stories aboveground are prevalent.

Class locations representing more populated areas require higher safety factors in pipeline design, testing, and operation. For instance, pipelines constructed on land in Class 1 locations must be installed with a minimum depth of cover of 30 inches in normal soil and 18 inches in consolidated rock. Class 2, 3, and 4 locations, as well as drainage ditches of public roads and railroad crossings, require a minimum cover of 36 inches in normal soil and 24 inches in consolidated rock.

Class locations also specify the maximum distance to a sectionalizing block valve (e.g., 10.0 miles in Class 1, 7.5 miles in Class 2, 4.0 miles in Class 3, and 2.5 miles in Class 4). Pipe wall thickness and pipeline design pressures, hydrostatic test pressures, maximum allowable operating pressure, inspection and testing of welds, and frequency of pipeline patrols and leak surveys must also conform to higher standards in more populated areas.

Class locations for the Project have been determined based on the proximity of the pipeline centerlines to other nearby structures and manmade features. Class locations along the pipeline route include approximately 8.4 miles in Class 1 locations, 4.0 miles in Class 2 locations, and 0.5 mile in Class 3 locations. If a subsequent increase in population density adjacent to the right-of-way results in a change in that portion of the pipeline's class location, TGP would reduce the maximum allowable operating pressure or replace the segment with pipeline of sufficient grade and wall thickness, if required to comply with the DOT regulations for the new class location.

The DOT Pipeline Safety Regulations require operators to develop and follow a written integrity management program that contains all the elements described in 49 CFR 192.911 and addresses the risks on each transmission pipeline segment. The rule establishes an integrity management program that applies to all high consequence areas (HCAs).

The DOT has published rules that define HCAs where a gas pipeline accident could do considerable harm to people and their property and requires an integrity management program to minimize the potential for an accident. This definition (described in 49 CFR 192.903) satisfies, in part, the Congressional mandate for the DOT to prescribe standards that establish criteria for identifying each gas pipeline facility in a high-density population area.

The HCAs may be defined in one of two ways. In the first method, an HCA includes

- current Class 3 and 4 locations;
- any area in Class 1 or 2 where the potential impact radius[18] is greater than 660 feet and there are 20 or more buildings intended for human occupancy within the potential impact circle;[19] or
- any area in Class 1 or 2 where the potential impact circle includes an identified site.

An identified site is an outside area or open structure that is occupied by 20 or more persons for at least 50 days in any 12-month period; a building that is occupied by 20 or more persons on at least 5 days a week for any 10 weeks in any 12-month period; or a facility that is occupied by persons who are confined, are of impaired mobility, or would be difficult to evacuate.

In the second method, an HCA includes any area within a potential impact circle that contains

- 20 or more buildings intended for human occupancy; or
- an identified site.

Using the second method, TGP has identified one HCA between MP 0.3 and 1.1.

Once a pipeline operator has determined the HCAs along its pipeline, it must apply the elements of its integrity management program to those segments of the pipeline within HCAs. The DOT regulations specify the requirements for the integrity management plan at 49 CFR 192.911. The pipeline integrity management rule for HCAs requires inspection of the pipeline HCAs every 7 years. TGP has indicated that integrity management principles, including the implementation of smart pigging in-line inspection programs, would also be applied to non-HCAs.

The DOT prescribes the minimum standards for operating and maintaining pipeline facilities, including the requirement to establish a written plan governing these activities. Each pipeline operator is required to establish an emergency plan that includes procedures to minimize the hazards of a natural gas pipeline emergency. Key elements of the plan include procedures for

---

[18] The potential impact radius is calculated as the product of 0.69 and the square root of the maximum allowable operating pressure of the pipeline in pounds per square inch gauge multiplied by the square of the pipeline diameter in inches.

[19] The potential impact circle is a circle of radius equal to the potential impact radius.

- receiving, identifying, and classifying emergency events, gas leakage, fires, explosions, and natural disasters;
- establishing and maintaining communications with local fire, police, and public officials, and coordinating emergency response;
- emergency system shutdown and safe restoration of service;
- making personnel, equipment, tools, and materials available at the scene of an emergency; and
- protecting people first and then property, and making them safe from actual or potential hazards.

The DOT requires that each operator establish and maintain liaisons with appropriate fire, police, and public officials to learn the resources and responsibilities of each organization that may respond to a natural gas pipeline emergency, and to coordinate mutual assistance. The operator must also establish a continuing education program to enable customers, the public, government officials, and those engaged in excavation activities to recognize a gas pipeline emergency and report it to appropriate public officials. TGP would provide the appropriate training to local emergency service personnel before the pipeline is placed in service.

We received a comment from the NPS requesting that the NPS be included in emergency response and notification procedures for the Project, due to the Project's proximity to the Lackawaxen River and the Delaware River, which is a National Wild and Scenic River. TGP has included NPS staff on the elected and public officials list for the Project and would continue to coordinate with the agency regarding emergency response and notification.

We also received a comment from an affected landowner expressing concerns regarding evacuation and escape routes in the event of an emergency or incident involving the pipeline. As required by the DOT, TGP would establish an Emergency Response Plan which would provide written procedures to minimize hazards from a gas pipeline emergency. TGP would:

- communicate and coordinate with local public safety officials and first responders;
- provide all associated personnel with yearly training and conduct annual emergency response exercises
- communicate Emergency Response Plan information to the public that live and/or work near the Project.

If an evacuation were warranted, the evacuation zone would depend on the nature, extent, and location of the incident.

7.2 Pipeline Accident Data

The DOT requires all operators of natural gas transmission pipelines to notify the DOT of any significant incident and to submit a report within 30 days. Significant incidents are defined as any leaks that:

- caused a death or personal injury requiring hospitalization; or
- involved property damage of more than $50,000 (1984 dollars).[20]

During the 20-year period from 1996 through 2015, a total of 1,310 significant incidents were reported on the more than 300,000 total miles of natural gas transmission pipelines nationwide.

Additional insight into the nature of service incidents may be found by examining the primary factors that caused the failures. Table B.7-1 provides a distribution of the causal factors as well as the number of each incident by cause.

The dominant causes of pipeline incidents are corrosion and pipeline material, weld or equipment failure, and excavation, constituting 66.7 percent of all significant incidents. The pipelines included in the data set in table B.7-1 vary widely in terms of age, diameter, and level of corrosion control. Each variable influences the incident frequency that may be expected for a specific segment of pipeline.

The frequency of significant incidents is strongly dependent on pipeline age. Older pipelines have a higher frequency of corrosion incidents and material failure, since corrosion and pipeline stress/strain is a time-dependent process.

The use of both an external protective coating and a cathodic protection system,[21] required on all pipelines installed after July 1971, significantly reduces the corrosion rate compared to unprotected or partially protected pipe.

TABLE B.7-1

Natural Gas Transmission Pipeline Significant Incidents by Cause (1996–2015) [a]

Cause	Number of Incidents	Percentage
Pipeline material, weld, or equipment failure	354	27.0
Corrosion	311	23.7
Excavation	210	16.0
All other causes [b]	165	12.6
Natural forces [c]	146	11.1
Outside force [d]	84	6.4
Incorrect operation	40	3.1
Total	**1,310**	**100**

[a] All data gathered from the PHMSA's Oracle BI Interactive Dashboard website for Significant Transmission Pipeline Incidents (DOT PHMSA, 2016).

[b] All other causes include miscellaneous, unspecified, or unknown causes.

[c] Natural force damage includes earth movement, heavy rain, floods, landslides, mudslides, lightning, temperature, high winds, and other natural force damage.

[d] Outside force damage includes previous mechanical damage, electrical arcing, static electricity, fire/explosion, fishing/maritime activity, intentional damage, and vehicle damage (not associated with excavation).

[20] $50,000 in 1984 dollars is approximately $115,000 as of March, 2014 (U.S Department of Labor, 2014).

[21] Cathodic protection is a technique to reduce corrosion (rust) of the natural gas pipeline through the use of an induced current or a sacrificial anode (like zinc) that corrodes at faster rate to reduce corrosion.

Outside force, excavation, and natural forces are the cause in 33.5 percent of significant pipeline incidents nationwide from 1996 to 2015. These result from the encroachment of mechanical equipment such as bulldozers and backhoes; earth movements due to soil settlement, washouts, or geologic hazards; weather effects such as winds, storms, and thermal strains; and willful damage. Table B.7-2 provides a breakdown of outside force incidents by cause.

Older pipelines have a higher frequency of outside forces incidents partly because their location may be less well known and less well marked than newer lines. In addition, the older pipelines contain a disproportionate number of smaller-diameter pipelines; which have a greater rate of outside forces incidents. Small diameter pipelines are more easily crushed or broken by mechanical equipment or earth movement.

Since 1982, operators have been required to participate in "One Call" public utility programs in populated areas to minimize unauthorized excavation activities in the vicinity of pipelines. The "One Call" program is a service used by public utilities and some private sector companies (e.g., oil pipelines and cable television) to provide preconstruction information to contractors or other maintenance workers on the underground location of pipes, cables, and culverts.

TABLE B.7-2

Excavation, Natural Forces, and Outside Force Incidents by Cause (1996–2015) [a]

Cause	Number of Excavation, Natural Forces, and Outside Force Incidents	Percentage of All Incidents [b,c]
Third party excavation damage	172	13.1
Heavy rain, floods, mudslides, landslides	74	5.7
Vehicle (not engaged with excavation)	49	3.7
Earth movement, earthquakes, subsidence	32	2.4
Lightning, temperature, high winds	27	2.1
Operator/contractor excavation damage	25	1.9
Unspecified excavation damage/previous damage	13	1.0
Other or unspecified natural forces	13	1.0
Fire/explosion	9	0.7
Fishing or maritime activity	9	0.7
Other outside force	9	0.7
Previous mechanical damage	6	0.5
Electrical arcing from other equipment/facility	1	0.1
Intentional damage	1	0.1
Total	**440**	**33.5**

[a] All data gathered from the PHMSA's Oracle BI Interactive Dashboard website for Significant Transmission Pipeline Incidents (DOT PHMSA, 2016).

[b] Percentage of all incidents was calculated as a percentage of the total number of natural gas transmission pipeline significant incidents (i.e., all causes) presented in table B.7-1.

[c] Due to rounding, column does not equal 33.6 percent.

7.3 Impact on Public Safety

The service incidents data summarized in table B.7-1 include pipeline failures of all magnitudes with widely varying consequences.

Table B.7-3 presents the average annual injuries and fatalities that occurred on natural gas transmission lines for the 5-year period between 2011 and 2015. These data have been separated into employees and nonemployees to better identify a fatality rate experienced by the general public. Fatalities among the public averaged 1.2 per year over the 5-year period from 2011 to 2015.

TABLE B.7-3

Injuries and Fatalities—Natural Gas Transmission Pipelines [a]

	Injuries		Fatalities	
Year	Employees	Public	Employees	Public
2011	1	0	0	0
2012	3	4	0	0
2013	0	2	0	0
2014	1	0	1	0
2015	12	2	6	0

[a] Data gathered from the PHMSA Pipeline Incident Flagged Files website (DOT PHMSA, 2015).

The majority of fatalities from pipelines are due to local distribution pipelines not regulated by FERC. These are natural gas pipelines that distribute natural gas to homes and businesses after transportation through interstate natural gas transmission pipelines. In general, these distribution lines are smaller diameter pipes and/or plastic pipes that are more susceptible to damage. Local distribution systems typically do not have large rights-of-way and pipeline markers common to the FERC regulated natural gas transmission pipelines.

The nationwide totals of accidental fatalities from various anthropogenic and natural hazards are listed in table B.7-4 in order to provide a relative measure of the industry-wide safety of natural gas transmission pipelines. Direct comparisons between accident categories should be made cautiously, however, because individual exposures to hazards are not uniform among all categories. The data nonetheless indicate a low risk of death due to incidents involving natural gas transmission pipelines compared to the other categories. Furthermore, the fatality rate is much lower than the fatalities from natural hazards such as lightning, tornados, or floods.

The available data show that natural gas transmission pipelines continue to be a safe, reliable means of energy transportation. From 1996 to 2015, there were national averages of 65.4 significant incidents, 9.1 injuries, and 2.3 fatalities per year. The number of significant incidents over the more than 300,000 miles of natural gas transmission lines indicates the risk is low for an incident at any given location. We conclude, based on the above numbers, that the operation of the Project would represent a slight increase in risk to the nearby public.

8. CUMULATIVE IMPACTS

The first European settlements in Pennsylvania date back to the mid-seventeenth century. However, indigenous peoples who lived in large settlements and associated satellite villages occupied the state more than 15,000 years ago. Currently, the state is the sixth most populated state in America. Consequently, the natural environment has been modified numerous times over a very long period of human residency.

TABLE B.7-4

Nationwide Accidental Fatalities by Cause

Type of Accident	Annual Number of Deaths
Poisoning [a]	38,851
Motor vehicle [a]	35,369
Falls [a]	30,208
Drowning [a]	3,391
Fire, smoke inhalation, burns [a]	2,760
Floods [b]	81
Tornado [b]	72
Lightning [b]	49
Hurricane [b]	47
Natural gas distribution lines [c]	13
Natural gas transmission pipelines [c]	2

[a] Accident data presented for motor vehicle, poisoning, falls, drowning, fire, smoke inhalation, and burns represent the annual accidental deaths recorded in 2013 (Centers for Disease Control and Prevention, 2013).

[b] Accident data presented for floods, tornados, lightning, and hurricanes represent the 30-year average of accidental deaths between 1985 and 2014 (National Oceanic and Atmospheric Administration, 2016).

[c] Accident data presented for natural gas distribution lines and transmission pipelines represent the 20-year average between 1996 and 2015 (DOT PHMSA, 2016).

In accordance with NEPA, we identified other actions in the vicinity of the Project facilities and evaluated the potential for a cumulative impact on the environment. As defined by the CEQ, a cumulative effect is the impact on the environment that results from the incremental impact of the action when added to other past, present, and reasonably foreseeable future actions regardless of what agency or person undertakes such other actions. The CEQ guidance states that an adequate cumulative effects analysis may be conducted by focusing on the current aggregate effects of past actions without delving into the historical details of individual past actions. In this analysis, we consider the impacts of past projects within defined areas of influence as part of the affected environment (environmental baseline) which was described and evaluated in the preceding environmental analysis. However, present effects of past actions that are relevant and useful are also considered. Table B.8-1 below summarizes the resource-specific regions of influence that were considered in this analysis.

TABLE B.8-1

Cumulative Impact Resource-Specific Regions of Influence

Resource	Cumulative Impact Region of Influence
Geology and Soils	Area of disturbance of the Orion Project and other projects within 0.5 mile for geology and within 1 mile for soils
Water Resources, Wetlands, and Fisheries	Hydrologic Unit Code (HUC)-12 watershed boundaries
Vegetation and Wildlife	0.5 mile from pipeline or aboveground facilities
Land Use and Recreation	5-mile radius
Visual	Distance that the tallest feature at the planned facility would be visible from neighboring communities
Traffic and Transportation	Affected counties and cities
Cultural Resources	Orion Project area of disturbance and other projects in the vicinity of the Orion Project. NRHP-eligible sites avoided, therefore, the Orion Project would not contribute to cumulative impacts.
Air Quality	0.25 mile from pipeline or aboveground facilities for evaluation of construction-related impacts. As the Orion Project would not have operational air quality impacts, cumulative air quality impacts outside the construction window were not assessed.
Noise	0.25 mile from pipeline or aboveground facilities for evaluation of construction-related impacts. As the Orion Project would not have operational noise impacts, cumulative noise impacts outside the construction window were not assessed.

As described in section B of this is EA, constructing and operating the Project would temporarily and permanently affect the environment. The Project would affect geology, soils, water resources, wetlands, vegetation, fish, wildlife, some land uses, recreation, visual resources, air quality, and noise. However, throughout section B of this EA, we determined that the Project would have only minimal or temporary impacts on these resources, with the exception of impacts on forested land and some forested and scrub-shrub wetlands. We also concluded that nearly all of the Project-related impacts would be contained within or adjacent to the temporary construction right-of-way and ATWS.

As discussed in section B of this EA, geology and soils impacts would be highly localized and limited primarily to the Project footprints during the period of construction. In addition, Project-related construction activities would not result in significant impacts on groundwater resources because the majority of construction would involve shallow, temporary, and localized excavation. For other resources, the contribution to regional cumulative impacts is lessened by the expected recovery of ecosystem function. For example, non-forested vegetation communities and wildlife habitats would be cleared, but restoration would proceed immediately following construction. Land use and visual impacts associated with the Project would be minimized to the greatest extent practicable because the pipeline is proposed to be adjacent to and/or within existing pipeline rights-of-way, and traffic-related impacts would be minor and short term during the construction period. Additionally, we determined that the Project would not generate significant air emissions or noise during operation. Both construction-related air quality and noise impacts would be temporary and not result in significant impacts, and no reasonably present or foreseeable projects with concurrent construction schedules are expected within the region of influence for construction-related air quality and noise impacts. However, potential cumulative impacts from minimal GHG emissions associated with the Orion Project and climate change are discussed in section B.8.2.5.

Based on the co-location of the pipeline with existing rights-of-way; TGP's implementation of impact avoidance, minimization, and mitigation measures as described in its construction and restoration plans; and our recommendations, we find that most of the Project impacts would be largely limited to the 12.9-mile-long corridor followed by the pipeline.[22] Therefore, we conclude that Project impacts would not be significant and would not contribute cumulatively to most resource areas, with the possible exceptions discussed below in section B.8.2.

As noted above, the Project is expected to have long-term or permanent impacts on certain resources, including forested and scrub-shrub wetlands. In addition, we received comments from the NPS requesting that the EA consider the cumulative impacts associated with the Lackawaxen River crossing, as well as the crossings of multiple tributaries to the Lackawaxen River and direct tributaries to the Delaware River. Lastly, although Project noise impacts would be minor and temporary, there is a potential for cumulative noise impacts with other concurrent construction projects in close proximity to the Orion Project. As a result, we have related the scope of our cumulative analysis to the magnitude of environmental impacts on forested lands, forested and scrub-shrub wetlands, waterbodies, traffic, and noise.

Table 5 of appendix B identifies present and reasonably foreseeable projects or actions occurring within the regions of influence of forested lands, forested and scrub-shrub wetlands, waterbodies, traffic, and noise. Actions outside the region of influence are generally not evaluated because their potential to contribute to a cumulative impact diminishes with increasing distance from the Orion Project. These

[22] Note this narrow corridor is not the expanded area of our cumulative impacts review, but rather the area directly affected by the Orion Project.

projects were identified by a review of publicly available information; aerial and satellite imagery; consultations with federal, state, and local agencies/officials and development authorities; and information provided by TGP, affected landowners, and concerned citizens.

The actions considered in our cumulative impact analysis may vary from the Orion Project in nature, magnitude, and duration. These actions are included based on the likelihood of completion near the proposed construction time span, and only projects with either ongoing impacts or that are "reasonably foreseeable" future actions were evaluated. Existing or reasonably foreseeable future actions that would be expected to affect similar resources during similar periods as the Orion Project were considered further. The anticipated cumulative impacts of the Orion Project and these other actions are discussed below, as well as any pertinent mitigation actions.

8.1 Identified Actions

Based on the areas of influence described above for forested land, forested and scrub-shrub wetlands, waterbodies, traffic, and noise cumulative impacts, we identified 18 other projects that were considered in the cumulative impact assessment (see table 5 of appendix B). These include the following types of actions/projects:

- other FERC-regulated Section 7(c) projects;
- TGP minor pipeline-related projects;
- commercial/industrial/residential/municipal development;
- Pennsylvania Department of Transportation (PennDOT) infrastructure / bridge projects,
- other energy and utility projects; and
- natural gas wells.

These are discussed further, below, based on the above category groupings.

8.1.1 Other FERC-Regulated Section 7(c) Projects

TGP's 300-Line Project included construction of eight pipeline loops, construction of two compressor stations, and modification of seven compressor stations. Activities in Wayne and Pike Counties, Pennsylvania included construction of 17.8 miles of looping pipeline (a portion of Loop 321) in Wayne County, and construction of 14.9 miles of looping pipeline (Loop 323) in Pike County. In addition, this project included the installation of an inlet gas filter-separator at Compressor Station 323. Approximately 4.2 miles of Loop 321 are within the Orion Project's Hydrologic Unit Code (HUC)-12 watershed region of influence, and approximately 8.7 miles of Loop 323 are within the Orion Project's HUC-12 watershed region of influence. The 300-Line Project was placed in service in October 2011.

TGP's NEUP Project included construction of 40 miles of pipeline in five loops and modification to existing compressor stations in Pennsylvania and New Jersey. Activities in Wayne and Pike Counties, Pennsylvania included construction of 4.2 miles of looping pipeline (a portion of Loop 321) in Wayne County, construction of 4 miles of looping pipeline (a portion of Loop 321) in Pike County, and construction of 6.3 miles of looping pipeline (Loop 323) in Pike County. In addition, this project included a number of modifications to Compressor Station 323, including installation of an electric motor-driven compressor unit; restaging of an existing compressor unit; installation of an inlet gas filter-separator, silencer, electric substation, and new compressor and variable frequency drive buildings; and modifications to the driveway and parking area. Approximately 8.2 miles of Loop 321 are within the Orion Project's HUC-12 watershed region of influence. Loop 323 associated with the NEUP Project is outside of the Orion Project's region of influence. This project was placed in service in November 2011.

On November 12, 2010, TGP filed an application with FERC for the Northeast Supply Diversification (NSD) Project. This project was approved by FERC and placed into service in November 2012. The NSD Project included construction of 6.8 miles of 30-inch-diameter looping pipeline in Tioga and Bradford Counties, Pennsylvania (Loop 315); addition of a new pig receiver at the existing Compressor Station 317; modifications at existing Compressor Station 230C in Niagara County, New York; and modifications to existing meter stations in Erie, Livingston, and Niagara Counties, New York and Bradford County, Pennsylvania.

On May 16, 2005, TGP filed an application with FERC for the Northeast ConneXion–NY/NJ Project. This project was approved by FERC and placed into service in 2006. The Northeast ConneXion –NY/NJ Project included construction of 6.0 miles of 30-inch-diameter looping pipeline in Susquehanna and Bradford Counties, Pennsylvania; additional compression and enhanced dehydration facilities at Compressor Station 313 in Potter County; uprating of a compressor at Compressor Station 317 by software changes in Bradford County; uprating to the Ramsey Meter Station in Bergen County, New Jersey; and use of existing additional capacity available at Compressor Station 325 in Sussex County, New Jersey.

On December 9, 2011, TGP filed an application with FERC for the MPP Project. This project was approved by FERC and placed into service in November 2013. The MPP Project included construction of 7.9 miles of 30-inch-diameter looping pipeline in Potter County, Pennsylvania (Loop 313) and a new pig launcher and miscellaneous aboveground facilities at Compressor Station 313. In addition, the MPP Project included modifications at four existing compressor stations in Pennsylvania, including Compressor Station 219 in Mercer County, Compressor Station 303 in Venango County, Compressor Station 310 in McKean County, and Compressor Station 313 in Potter County. Compressor station modifications did not include increased compression but included installation of bidirectional piping, installation of bidirectional check measurements, compression discharge piping, and upgrades to station yard piping.

In addition to the TGP projects described above, there are two other TGP projects currently under review by the Commission associated with the 300 Line: the Triad Expansion Project and the Susquehanna West Project (see also section A.4 of this EA). These two projects are described in more detail below, and included in table 5 of appendix B; however, as discussed below, neither of these two projects is within the region of influence for cumulative impacts with the Orion Project.

On June 19, 2015, TGP filed an application with FERC for the Triad Expansion Project and is anticipating an in-service date of November 2017 (subject to FERC approval). The Triad Expansion Project includes construction of approximately 7 miles of new pipeline and auxiliary facilities along TGP's existing 300-Line in Susquehanna County, Pennsylvania. Auxiliary facilities consist of crossover and connecting facilities, a new pig launcher, a pig receiver, and an additional odorant facility at Compressor Station 321.

On April 2, 2015, TGP filed an application with FERC for the Susquehanna West Project and is anticipating an in-service date of November 2017 (subject to FERC approval). The Susquehanna West Project includes construction of approximately 8.1 miles of new pipeline along TGP's existing 300 Line in Tioga and Bradford Counties, Pennsylvania. Two existing compressor stations, Compressor Station 317 and Compressor Station 319, would be modified to increase compression capacity. Additional piping modifications and minor equipment modifications would be installed at both Compressor Station 317 and Compressor Station 319. In addition, piping modifications are proposed at Compressor Station 315 in Tioga County, Pennsylvania.

The Triad Expansion Project, Susquehanna West Project, NSD Project, Northeast ConneXion – NY/NJ Project, and MPP Project are not within the region of influence for cumulative impacts identified in table B.8-1; therefore, these five projects would have minimal to no impact on resources in the vicinity of the Orion Project and would not contribute to cumulative impacts for the Orion Project. As a result, the Triad Expansion Project, Susquehanna West Project, NSD Project, Northeast ConneXion, and the MPP Project are not evaluated in further detail in this assessment.

8.1.2 TGP Minor Pipeline-Related Projects

Replacement Unit 1A VFD Chiller Unit at Compressor Station 323

This project involves replacement of an electric Chiller Unit at Compression Station 323. This is an internal modification to the existing compressor station and was scheduled to begin construction in April 2015.

300 System Class Change 32

This project would involve a class change (Class 1 to 3) for Line 300-1 within valve section 322-1, resulting in replacement of approximately 220 feet of 24-inch-diameter pipe and installation of a new mainline block valve. This future project is currently under TGP review and is not yet under construction.

300-1 Cathodic Protection Modification Project

This project would involve recoating pipe, and install new rectifier, linear anode, and new cathodic protection system at 33 sites along Line 300-1. This future project is currently under TGP review and is not yet under construction.

8.1.3 Commercial/Industrial/Residential/Municipal Development

Strasser Quarry

The Strasser Quarry is an approximately 15-acre sand and gravel quarry in Palmyra Township, Wayne County, Pennsylvania. The quarry is approximately 1.8 miles from Loop 322 and has been in operation since at least 2012. Further details regarding this facility were not available for our analysis.

Trails End Camp

Trails End Camp is a summer camp for children near Beach Lake in Wayne County, Pennsylvania approximately 2.9 miles from Loop 322. Further details regarding this facility were not available for our analysis.

Wayne D Holbert Quarry Expansion

The Wayne D Holbert quarry is a bluestone quarry that is currently in operation approximately 1.5 miles from Loop 323. Further details regarding this facility were not available for our analysis.

8.1.4 Pennsylvania Department of Transportation Infrastructure/ Bridge Projects

Pond Eddy Crossing Project No. 9329

The Pond Eddy Bridge was constructed between 1904 and 1905 and spans the Delaware River connecting the hamlet of Pond Eddy, New York and Sholola Township, Pike County, Pennsylvania approximately 9.4 miles from Loop 323. PennDOT and the New York State Department of Transportation are working in cooperation to address structural and functional deficiencies through a bridge improvement project. Construction of this project is expected to begin in the summer of 2016 and be completed by the end of 2018.

SR 1007 over Twin Lakes Creek Project No. 96726

This past project involved replacement of existing bridge on State Route (SR) 1007 (Woodtown Road) approximately 6.4 miles from Loop 323. The bridge spans Twin Lake Creek in Pike County, Pennsylvania.

SR 590 Pipes Bridge Replacement Project No. 57769

This past project involved replacement of existing pipes under SR 590 with culverts. The project was near the intersection of SR 590 and SR 4003 in Lackawaxen Township, Pike County, Pennsylvania approximately 1.1 miles from Compressor Station 323.

SR 1003 over Lackawaxen River Project No. 89014

This planned project involves the restoration of the SR 1003 bridge over the Lackawaxen River in Lackawaxen Township, Pike County, Pennsylvania approximately 0.8 mile from Compressor Station 323.

Carley Brooks Bridge 2 Project No. 9833

This planned project involves the replacement/rehabilitation of the SR 2008 bridge over Carley Brook in Honesdale Borough, Wayne County, Pennsylvania approximately 2.6 miles from Loop 322.

SR 1014 Slide Restoration Project No. 96808

This planned project involves slide restoration and slope repair on a section of SR 1014 (Masthope Road) in Lackawaxen Township, Pike County, Pennsylvania approximately 0.9 mile from Loop 323.

Roebling Bridge Rehabilitation Project

In addition to the PennDOT projects discussed above, we also received comments during a conference call on March 21, 2016, from the NPS requesting that we consider the Roebling Bridge Rehabilitation Project within the Orion Project's cumulative impact analysis. Roebling's Delaware Aqueduct, also known as Roebling Bridge, is a wire suspension bridge, approximately 2.7 miles from Loop 323, that was opened in 1849 and spans the Delaware River between Pennsylvania and New York, with portions of the bridge in Pike County, Pennsylvania. The bridge is maintained by the NPS, and the rehabilitation project will involve paving on the bridge deck and approaches; rehabilitation of timber on ice breakers, with portions of the icebreakers to be replaced; and masonry work on the piers. The NPS indicated that the planned in-water work will be on the ice breakers and will involve isolating all three piers containing ice breakers using temporary cofferdams. Work will be conducted within the cofferdams

to repair the ice breakers, and in-water work areas will be restored prior to removing the cofferdams. The total project ground disturbance is estimated at 0.03 acre. The bridge rehabilitation construction is scheduled to start in the fall of 2016 and will end in mid-January 2017. Periodic shutdowns of the bridge to traffic are expected during the construction process.

The Roebling Bridge Rehabilitation Project has obtained USACE (Section 404) and state water quality certifications (Section 401). A review of the project was completed under Section 7 of the Wild and Scenic Rivers Act, which determined that the proposed activity will not have a direct and adverse effect on the Upper Delaware Wild and Scenic River. Reviews were also completed under the ESA with the FWS. The 404/401 permit and Section 7 reviews discussed mitigation measures to minimize impacts.

8.1.5 Other Energy and Utility Projects

Northeast-Pocono Reliability Project

PPL Electric Utilities completed the Northeast-Pocono Reliability Project, which was a rebuild of an existing 69-kilovolt (kV) electric transmission line that runs from the Peckville area in Lackawanna County to Honesdale, Wayne County, Pennsylvania approximately 1.7 miles from Loop 322. The electric transmission line is approximately 20 miles long. The rebuild project involved the replacement of existing poles in a 100-foot-wide right-of-way. Construction on the Northeast-Pocono Reliability Project was completed in April 2016 and is currently operating. Land restoration is expected to last until the end of the year.

131-Bohemia Tap 69 kV, 845 BIL Modernization Project

This PPL Electric Utilities Project involves modernization of an existing 69-kV powerline in Pike County, Pennsylvania adjacent to Loop 322.

8.1.6 Natural Gas Wells

While natural gas well development activities are outside of the Commission's jurisdiction and are under the jurisdiction of the PADEP and other resource agencies, clearing and construction activities associated with natural gas well development could result in impacts on forested land, forested and scrub-shrub wetlands, and waterbodies. Two permitted natural gas wells were identified in PADEP's online database within the Orion Project's related HUC-12 watersheds (PADEP, 2015). These wells are included in table 5 of appendix B.

8.2 Potential Cumulative Impacts of the Proposed Action

8.2.1 Forested Lands

Impacts on forested lands include long-term construction impacts and permanent operational impacts from clearing and maintenance activities. This analysis considers cumulative impacts on forested areas from the Orion Project and other existing and planned projects within 0.5 mile. The other projects considered in this analysis include:

- TGP's 300-Line Project;
- TGP's NEUP Project;
- TGP's Unit 1A VFD chiller unit replacement at Compressor Station 323;
- TGP's 300 System Class Change 32; and
- PPL Electric Utilities 131-Bohemia Tap 69 kV, 845 BIL Modernization Project.

Other projects listed in table 5 of appendix B were not present within the 0.5-mile region of influence for cumulative impacts on forested lands.

Construction activities within the Orion Project's region of influence associated with TGP's chiller unit replacement at Compressor Station 323 and 300 System Class Change Project would not affect forested lands. The chiller unit replacement at Compressor Station 323 was an internal modification at this existing compressor station, and there was no tree clearing or other vegetation impacts associated with this project. Similarly, activities associated with the 300 System Class Change Project would occur within the existing right-of-way, and no tree clearing is required. In addition, although publicly available information regarding vegetation impacts associated with the PPL Electric Utilities Project was not identified, this project involved modifications to approximately 1.8 miles of existing overhead electrical power line. Given that these modifications involved existing power lines and associated rights-of-way, only limited, if any, tree clearing would be expected associated with this project. Therefore, these projects would not contribute to cumulative impacts when considered with the Orion Project.

Portions of the 321 and 323 Loops associated with the 300-Line Project were constructed within the region of influence of the Orion Project. In addition, this project involved modifications to Compressor Station 321; however, these modifications were within the existing fence line of Compressor Station 321 and did not affect forested lands. Forested land impacts associated with construction and operation of the pipeline loops within the Orion Project's region of influence are described below:

- The 22.3-mile 321 Loop in Susquehanna and Wayne Counties affected 148.4 acres of forested land for construction and 25.1 acres of forested land for operation; however, only approximately 0.7 mile of this loop was within the 0.5-mile region of influence for forested land cumulative impacts associated with the Orion Project. Detailed quantification of impacts on forested lands is not available for this 0.7-mile section of the 321 Loop. This area is comprised of existing pipeline right-of-way through forested areas. For the purpose of this assessment, we assumed that forested land impacts were evenly distributed along the 22.3-mile loop. Therefore, about 3 percent of the total 321 Loop impacts, or 4.7 acres of construction impacts and 0.8 acre of operational impacts, were assumed to have occurred on forested lands within the region of influence.

- The 14.9-mile 323 Loop in Pike County affected 213.2 acres of forested land for construction and 39.4 acres of forested land for operation. Approximately 5.2 miles of this loop was within the 0.5-mile region of influence for forested land cumulative impacts associated with the Orion Project. Detailed quantification of impacts on forested lands is not available for this 5.2-mile section of the 323 Loop. This area is comprised of existing pipeline right-of-way through forested areas. For the purpose of this assessment, we assumed that forested land impacts were evenly distributed along the 14.9-mile loop. Therefore, about 35 percent of the total 323 Loop impacts, or 74.6 acres of construction impacts and 13.8 acres of operational impacts, were assumed to have occurred on forested lands within the region of influence.

Regarding the NEUP Project, the 8.2-mile 321 Loop was constructed entirely within the Orion Project's region of influence. Construction and operation of this loop affected 53.6 acres of forested land and 14.3 acres of forested land, respectively. In addition, this project involved modifications to Compressor Station 323; however, these modifications were within the existing fence line of Compressor Station 323 and did not affect forested lands.

Forested impacts associated with the Orion Project include 47.0 acres of construction impacts, including 12.5 acres of operational impacts. Based on the above analysis, potential cumulative impacts on forested areas in the area of influence could occur from construction and operation of the Orion Project in combination with the 300-Line and NEUP Projects. The cumulative forested impacts associated with the Orion Project and other projects within the area of influence for forested impacts are summarized in table B.8-2.

TABLE B.8-2

Summary of Cumulative Upland Forest Impacts for the Orion Project

	Upland Forest (acres) [a]	
Project	Construction	Operation
Orion Project	45.3	12.5
300-Line Project [b]	79.3	14.6
NEUP Project [c]	53.6	14.3
Total	**178.2**	**41.4**

[a] Upland forested impacts identified within 0.5 mile of the Project.

[b] Impacts estimated based on total forested impacts of the 321and 323 Loops, scaled for the portions of these Loops within the 0.5-mile region of influence.

[c] Impacts based on total forested impacts of the 321 Loop within the 0.5-mile region of influence.

The 300-Line Project, NEUP Project, and Orion Project are looping projects, and previous Commission analyses have concluded that forest fragmentation is reduced with the co-location of looping projects (as compared to new, greenfield pipelines) because most of the forested lands affected are already bisected by an existing right-of-way (FERC, 2015). We acknowledge, however, that these types of impacts widen the right-of-way corridor and move the edge effects into new areas of forest. Restoration of areas cleared for construction would proceed immediately following completion of the Orion Project. For example, because the 300-Line Project has already been placed in service, some of the construction impacts associated with the 300-Line Project and NEUP Project have had time to begin regeneration, which further lessens the potential for regional cumulative impacts with the proposed future construction of the Orion Project.

Within the 0.5-mile cumulative impact region of influence, there are approximately 6,944.7 acres of forested land (Homer et al., 2015). When considered in the context of available forested land in this region of influence, the long-term construction-related impact on forests would be on 2.6 percent of the total amount of forested land present. Similarly, the permanent operational related impact on forests would be on 0.6 percent of the total amount of forested land present. These percentages illustrate the minimal impact on forested lands that these projects had or would have in context of forested lands that exist in the region of influence of the Orion Project.

TGP would be required to restore vegetation in temporarily disturbed areas, and the other FERC jurisdictional projects in the region of influence would be held to the same restoration standards as the Orion Project. Furthermore, siting of the Orion Project within and adjacent to existing rights-of-way, where possible, along with implementation of BMPs and TGP's Plan and Procedures, minimizes impacts on forested lands to the extent possible. Therefore, this analysis concludes that the overall impact of the 300-Line, NEUP, and Orion Projects on forested lands within the region of influence is not considered cumulatively significant.

8.2.2 Wetlands

Impacts from the Orion Project on wetlands range from short-term to permanent. Impacts on forested and scrub-shrub wetlands include long-term construction impacts and permanent operational impacts from clearing and maintenance activities. These impacts would be limited to the conversion of the vegetation cover: affected areas would retain their hydrologic function as wetlands. The Orion Project would also affect emergent wetlands, but following revegetation, these wetlands would transition relatively quickly back into a community with functionality similar to that of the preconstruction state (typically within 1 to 3 years, but closer to 1 year or less in the Project area). Therefore, this cumulative impact analysis is focused on impacts on shrub-scrub and forested wetland types, which have longer revegetation time frames and are more susceptible to cumulative impacts.

This analysis considers cumulative impacts on forested and scrub-shrub wetlands from the Orion Project and the following existing and planned projects within the Orion Project's related HUC-12 watersheds:

- TGP's 300-Line Project;
- TGP's NEUP Project;
- TGP's Unit 1A VFD chiller unit replacement at Compressor Station 323;
- TGP's 300 System Class Change 32;
- TGP's 300-1 Cathodic Protection Modification Project;
- Strasser Quarry;
- Trails End Camp Blasting Project;
- Wayne D Holbert Quarry Expansion;
- PennDOT projects listed in table 5 in appendix B;
- PPL Electric Utilities Northeast-Pocono Reliability Project;
- PPL Electric Utilities 131-Bohemia Tap 69 kV, 845 BIL Modernization Project; and
- two permitted natural gas wells.

Other projects listed in table 5 of appendix B were not present within the same HUC-12 watersheds as the Orion Project, which was defined as the region of influence for cumulative impacts on wetlands.

Construction activities within the Orion Project's region of influence associated with TGP's chiller unit replacement at Compressor Station 323, 300 System Class Change Project, and the 300-1 Cathodic Protection Project would not affect forested or scrub-shrub wetland. The chiller unit replacement at Compressor Station 323 was an internal modification at this existing compressor station, and there was no tree clearing or other vegetation impacts associated with this project. Similarly, activities associated with the 300 System Class Change Project would take place within the existing right-of-way, and no tree clearing is required. Although the 300-1 Cathodic Protection Project would temporarily affect wetland resources, all work would be conducted within the existing right-of-way. Therefore, only temporary impacts on emergent wetlands would occur.

Further, the portion of the PPL Electric Utilities Northeast-Pocono Reliability Project within the region of influence and the PPL Electric Utilities 131-Bohemia Tap 69 KV, 845 BIL Modernization Project would include rebuilding/modernization of existing lines, and the identified PennDOT projects involve replacement or rehabilitation of existing infrastructure. Given that these activities would take place within an existing right-of-way or are associated with existing and maintained infrastructure, only limited, if any, tree clearing shrub-scrub wetland disturbance would be expected associated with these projects.

Based on the above considerations, TGP's Unit 1A VFD chiller unit replacement at Compressor Station 323, TGP's 300 System Class Change 32, TGP's 300-1 Cathodic Protection Modification Project, PennDOT projects, the PPL Electric Utilities Northeast-Pocono Reliability Project, and the PPL Electric Utilities 131-Bohemia Tap 69 KV Project would not contribute to cumulative impacts on forested and scrub-shrub wetlands when considered with the Orion Project.

No readily available public information was identified regarding potential impacts associated with the Strasser Quarry, Trails End Camp Blasting Project, and the Wayne D Holbert Quarry Expansion Projects. Although they are in the same HUC-12 watershed as the Orion Project, it is unlikely given the nature of these projects that they would contribute significantly to cumulative impacts on forested and scrub-shrub wetlands.

Regarding natural gas wells, no wetland permits were identified associated with the natural gas wells within the Orion Project's related HUC-12 watersheds; therefore, cumulative wetland impacts associated with natural gas wells were not further evaluated.

Within the region of influence, TGP's 300 Line Project had 2.6 acres of long-term construction impacts on forested wetlands and 0.2 acre of long-term construction impacts on scrub-shrub wetlands. Additionally, there were 0.4 acre of permanent operational impacts on forested wetlands as a result of the project. The 300 Line Project was placed into service in 2011; therefore, while some revegetation of the areas disturbed during construction has begun, these areas are not yet restored to preconstruction vegetation densities.

TGP's NEUP Project had 8.0 acres of long-term construction impacts on forested wetlands and 1.3 acres of long-term construction impacts on scrub-shrub wetlands. There were 1.8 acres of permanent operational impacts for forested wetlands and 0.1 acre of permanent operational impacts on scrub-shrub wetlands as a result of the project. The NEUP Project was placed into service in 2011; therefore, while some revegetation of the areas disturbed during construction has begun, these areas are not yet restored to preconstruction vegetation densities. According to the Year 2 Spring/Fall Post-Construction FERC Monitoring Report all wetlands monitored on Loops 321 and 323 are on track towards successful restoration or have been fully restored. Wetlands categorized as being "on track" are those which display the characteristics of redevelopment as defined by the USACE. Greater than 80 percent vegetation cover has been obtained on 44 of the 46 wetlands monitored on Loop 321 and on 13 of the 15 wetlands monitored on Loop 323. Based on the above analysis, potential cumulative impacts on forested and scrub-shrub wetlands in the area of influence could occur from construction and operation of the Orion Project in combination with the 300-Line and NEUP projects (table B.8-3).

The forested and scrub-shrub wetland impacts identified above would not take place at the same time or within a single watershed or wetland complex. Rather, impacts would occur or have occurred over the span of a few years and be spread out over a linear distance and over multiple different wetlands and watersheds. For example, wetland impacts associated with the Orion Project would occur along the length of the pipeline route, which crosses five watersheds. While certain wetland functions such as floodwater storage provide basin-wide or regional level functions, these impacts would be temporary and restored following construction. In addition, longer-term wetland impacts associated with vegetation and habitat alterations would result in more localized impacts on wetlands. For example, impacted wetland floodwater storage function associated with the 300 Line and NEUP Projects would have returned prior to construction of the Orion Project. In addition, restoration of construction-related impacts on wetland vegetation associated with the 300 Line and NEUP Projects would also have begun, although the final vegetation type allowed to revegetate the right-of-way might not yet have been achieved. This fact helps minimize any cumulative impacts. If the wetland function is restored, the possibility of cumulative impacts is substantially diminished.

TABLE B.8-3

Summary of Cumulative Wetland Impacts for the Orion Project

Project	Forested Wetland (acres)[a]		Scrub-Shrub Wetland (acres)[a]	
	Construction	Operation	Construction	Operation
Orion Project	6.3	3.5	4.5	1.4
300-Line Project [b]	2.6 [c]	0.4 [c]	0.2 [d]	0.0 [d]
NEUP Project [e]	8.0	1.8	1.3	0.1
Total	**16.9**	**5.7**	**6.0**	**1.5**

[a] Impact acreages are associated with project activities in Wayne and Pike Counties, Pennsylvania.
[b] 300 Line Project Environmental Assessment, appendix F tables (FERC, 2010).
[c] If a forested component was present in a wetland complex identified in the 300 Line Project Environmental Assessment, it was classified as forested wetland.
[d] If a scrub-shrub component was present in a forested wetland complex, it was classified as forested wetland. If a scrub-shrub component was present in an emergent wetland complex it was classified as scrub-shrub wetland.
[e] The NEUP Environmental Assessment, table 2.2.4-1 (FERC, 2011).

TGP would minimize wetland impacts by co-locating the Orion Project with the existing 300 Line and by implementing the measures outlined in its Procedures. In addition, TGP would construct pipeline segments and mitigate unavoidable impacts on wetlands in accordance with the conditions and requirements of state and federal wetland permits. Although construction of the Orion Project along with the other projects in the region of influence could result in the conversion of forested and scrub-shrub wetlands or a reduction in the amount of existing forested and scrub-shrub wetlands in the vicinity, these impacts are expected to be appropriately mitigated, which would minimize any cumulative wetland effects.

Based on the above, we conclude that the Project would not contribute significantly to long-term cumulative impacts on forested and scrub-shrub wetlands. In addition, co-location of the Project with the existing 300 Line, BMPs, mitigation, and adherence to regulatory requirements reduces longer-term impacts to less than significant levels.

8.2.3 Waterbodies

Generally, impacts resulting from pipeline construction across waterbodies are localized and short-term. Other projects that occur in the same watersheds as the Orion Project and that could be under construction during the same time as the Orion Project could result in cumulative impacts on waterbodies. Of the projects within the region of influence, the following projects have the potential to be constructed concurrently or following construction of the Orion Project:

- TGP minor pipeline-related projects;
- Strasser Quarry Project;
- the Pond Eddy Crossing Project;
- SR 1003 Lackawaxen River Crossing Project;
- Carley Brooks Bridge 2 Project; and
- SR 1014 Slide Restoration Project.

The remaining projects within the region of influence were completed in the past and any temporary waterbody impacts associated with these projects would not be cumulatively significant with the future temporary impacts of the Orion Project.

The Orion Project would cross a total of 31 waterbodies: 19 perennial, 4 intermittent, 6 ephemeral, and 1 flowing ditch. One ephemeral stream crosses under proposed temporary access road 6 through an existing culvert, and the flowing ditch is in the ATWS and would be avoided by construction activities. TGP would cross the majority of the waterbodies using a dry crossing method. As noted previously, we received comments from the NPS regarding the Orion Project's crossing of the Lackawaxen River, as well as the crossings of multiple tributaries to the Lackawaxen River and direct tributaries to the Delaware River. The Project crossing of the Lackawaxen River is approximately 3 miles upstream of the portion of the Upper Delaware River classified as a Wild and Scenic River.

Construction activities within the Orion Project's region of influence associated with TGP's minor pipeline projects are or would mainly take place within existing aboveground facilities or minor replacements within the existing right-of-way with no stream crossings required. Although the 300-1 Cathodic Protection Project would temporarily affect some waterbodies, which waterbodies might be affected or the timing of potential impacts is not known. All work would be conducted within the existing right-of-way, and TGP would be required to adhere to FERC's Plan and Procedures, as well as state and federal permitting requirements. Therefore, only minor, temporary impacts on waterbodies would be anticipated, and the 300-1 Cathodic Protection Project would not significantly contribute to cumulative impacts.

Regarding potential cumulative impacts from the Orion Project and the Strasser Quarry Project, a 2002 mine transfer notice posted in the *Pennsylvania Bulletin* indicated that there is no receiving stream at the quarry (Pennsylvania Bulletin, 2016). Therefore, this project would not contribute to cumulative impacts.

Cumulative impacts would only occur in the event that more than one project affects the same waterbody within a similar period of time. Of the current and pending future PennDOT projects identified, only the Pond Eddy and SR 1003 Lackawaxen Crossing Projects would potentially contribute to cumulative impacts with the Orion Project.

The Pond Eddy Crossing Project evaluated a number of alternatives related to bridge repair and rehabilitation, and the NEPA evaluation completed by PennDOT determined that replacement of the historic Pond Eddy Bridge would minimize impacts on the Delaware River. Based upon currently available information, the bridge design is not finalized, and the project team is currently consulting with the NPS, PADEP, New York State Department of Environmental Conservation, and the Upper Delaware Council to minimize impacts on environmental resources while maintaining boater safety and construction access. Environmental permits from state and federal environmental resource agencies have not yet been issued. No detailed information was readily available regarding the PennDOT SR1003 Lackawaxen River Crossing Project.

In addition to the PennDOT projects discussed above, we also received comments from the NPS requesting that we consider the Roebling Bridge Project, which would affect the Delaware River. The Roebling Bridge is maintained by the NPS, and in-water work for the rehabilitation project will be necessary. Construction is scheduled to start in the fall of 2016 and end in mid-January 2017. Based on the current construction schedule for the Roebling Bridge Project, construction would occur almost entirely outside of the Orion Project's proposed crossing timing of the Lackawaxen River.

Regarding the Orion Project's crossing of the Lackawaxen River, as described in section B.2.2, TGP's original FERC application proposed an open trench (wet) crossing of the Lackawaxen River. Since the filing of its original application, TGP coordinated with the PADEP and the USACE to revise its crossing plan for the Lackawaxen River and is now proposing to cross the Lackawaxen River using a cofferdam, which is a dry crossing method. Although TGP's on-site investigations and flow analysis

support a cofferdam crossing of the Lackawaxen River, the potential exists that on-site conditions may not support the use of this dry crossing method. Therefore, TGP has identified that in the event that a cofferdam crossing could not be implemented, an open cut (wet) crossing method would be used. Potential impacts associated with an open cut (wet) crossing of the Lackawaxen River are discussed in section C.7.

The potential impacts associated with the Lackawaxen River crossing, and the crossing of other tributaries to the Lackawaxen River and Delaware River, include increased turbidity during pipeline construction, and temporary and long-term vegetation impacts on streambanks. Our environmental analysis presented in section B.2 determined that with the implementation of mitigation measures included in TGP's Procedures and state and federal waterbody crossing permits, these impacts would be minor and temporary.

The Orion Project and the other projects in the region of influence have minimized impacts on waterbodies to the extent possible. In the event that construction of the Orion Project and other proposed infrastructure projects occur concurrently, the potential exists that increased turbidity associated with the Orion Project's crossing of the Lackawaxen River, its tributaries, and tributaries to the Delaware River could result in increased downstream turbidity. However, based on the Orion Project's location 3 miles upstream of the Wild and Scenic portion of the Delaware River, and with the proper implementation of mitigation measures described above, turbidity attributable to the Orion Project would be unlikely to significantly impact the Wild and Scenic portion of the Delaware River; thus, any cumulative impact would be minor.

Considering TGP's BMPs, proposed and required mitigation, and adherence to regulatory requirements, we conclude that the Project would not contribute significantly to long-term cumulative impacts on waterbodies.

8.2.4 Traffic

Construction of the Orion Project would generate traffic associated with delivery of pipe sections and other construction materials and supplies, worker commutes, and movement of construction equipment. This added traffic could increase congestion on public roads. Operation of the Orion Project would not create new traffic.

Traffic impacts resulting from Orion Project construction would typically be localized to the specific segment under construction, for the duration of that segment's construction. Other projects that occur in within a few miles of the Orion Project and that could be under construction at the same time could result in cumulative traffic impacts. The following projects within the region of influence could be constructed concurrently or following construction of the Orion Project:

- TGP minor pipeline-related projects;
- Strasser Quarry Project;
- SR 1003 Lackawaxen River Crossing Project;
- Carley Brooks Bridge 2 Project; and
- SR 1014 Slide Restoration Project.

The remaining projects in the region of influence are completed. Existing traffic incorporates the long-term traffic effects of those completed projects.

Existing traffic in the vicinity of the Orion Project is generally very light. Roads crossed by the Orion Project typically carry less than 2,000 vehicles per day (PennDOT, 2014). In the event that construction of the Orion Project and other proposed infrastructure projects occur concurrently, cumulative traffic impacts could occur on public roads, particularly the larger roads in the area, such as SR 590 and U.S. Route 6. While detailed construction traffic data are not available for the Orion Project or for other projects within the region of influence, it is unlikely that these projects—individually or in combination—would exceed the carrying capacity of affected roads. Some minor traffic impacts may occur during Project construction; however, due to traffic mitigation measures described in section B.4.1 and availability of other public roadways in the area, we conclude that the Project would not result in significant cumulative traffic impacts.

8.2.5 Climate Change

Climate change is the change in climate over an extended period of time, whether due to natural variability or as a result of human activity, and cannot be represented by single annual events or individual anomalies. For example, a single large flood event or particularly hot summer are not indications of climate change, while a series of floods or warm years that statistically change the average precipitation or temperature over years or decades may indicate climate change.

The leading U.S. scientific body on climate change is the U.S. Global Change Research Program (USGCRP).[23] In May 2014, the USGCRP issued a report, *Climate Change Impacts in the United States*, summarizing the impacts that climate change has already had on the United States and what projected impacts climate change may have in the future (USGCRP, 2014). The report includes a breakdown of overall impacts by resource and impacts described for various regions of the United States. Although climate change is a global concern, for this cumulative analysis, we will focus on the potential cumulative impacts of climate change in the Project area.

The USGCRP's report notes the following observations of environmental impacts with a high or very high level of confidence that may be attributed to climate change in the Northeast region:

- average temperatures have risen about 2 °F between 1895 and 2011 and are projected to increase another 1 to 8 °F over the next several decades with more frequent days above 90 °F;
- areas that currently experience ozone pollution problems are projected to experience an increase in the number of days that fail to meet the federal air quality standards;
- an increase in health risks and costs for vulnerable populations due to projected additional heat stress and poor air quality;
- precipitation has increased by about 5 inches and winter precipitation is projected to increase 5 to 20 percent by the end of the century;
- extreme/heavy precipitation events have increased more than 70 percent between 1958 and 2010 and are projected to continue to increase;

[23] The following departments comprise the USGCRP: the EPA, U.S. Department of Energy, U.S. Department of Commerce, U.S. Department of Defense, USDA, U.S. Department of the Interior, U.S. Department of State, PHMSA, Department of Health and Human Services, National Aeronautics and Space Administration, National Science Foundation, Smithsonian Institution, and Agency for International Development.

- sea levels have risen about 1 foot since 1900 and are projected to continue rising 1 to 4 feet by 2100, stressing infrastructure (e.g., communications, energy, transportation, water, and wastewater);

- severe flooding due to sea-level rise and heavy downpours is likely to occur more frequently;

- crop damage from intense precipitation events, delays in crop plantings and harvest, and heat stress negatively affect crop yields;

- invasive weeds are projected to become more aggressive due to the benefit of higher CO_2 levels;

- a change in range, elevation, and intra-annual life cycle events of vegetation and wildlife species; and

- an increase in carrier habitat and human exposure to vector-borne diseases (e.g., Lyme disease or the West Nile Virus).

The GHG emissions associated with construction and operation of the Project are discussed in more detail in section B.6. Emissions of GHGs from the Orion Project and other regional projects would not have any direct impacts on the environment in the project areas. Currently, there is no standard methodology to determine how a project's relatively small incremental contribution to GHGs would translate into physical effects on the global environment.

8.3 Conclusion

We identified recently completed, ongoing, and planned projects in the Orion Project area that were within the Orion Project's cumulative impact region of influence in table 5 of appendix B.

Based on our analysis, we concluded that the potential exists for cumulative impacts on forested lands, wetlands, waterbodies, and traffic. However, our analysis concluded that the effects of the Orion Project on these resources, when combined with impacts from other projects in the region of influence, would not result in significant impacts.

C. ALTERNATIVES

In accordance with NEPA and FERC policy, we evaluated alternatives to the Project to determine whether they would be reasonable and environmentally preferable to the proposed action. These alternatives included the no-action alternative, system alternatives, and waterbody crossing alternatives. The evaluation criteria used for developing and reviewing alternatives were:

- technical and economic feasibility and practicality;
- significant environmental advantage over the proposed action; and
- ability to meet the Project's stated objective which is to provide the contracted new capacity of approximately 135,000 PAGC of natural gas capacity to the Project shippers.

Our evaluation of the identified alternatives is based on Project-specific information provided by TGP, affected landowners, and other concerned parties; publicly available information; our consultations with federal and state resource agencies; and our expertise and experience regarding the siting, construction, and operation of natural gas transmission facilities and their potential impact on the environment. None of the environmental comments received on the Orion Project identified specific alternatives to the proposed looping segments. Further, there are no new major aboveground facilities associated with the Project; all of the proposed modifications would take place at the existing Compressor Station 323. Therefore, we did not evaluate any aboveground facility site alternatives. However, as previously noted, we received comments regarding the proposed Lackawaxen River crossing; therefore, we evaluated alternative crossing methods for the Lackawaxen River.

Each alternative was considered to the point where it was clear the alternative was not reasonable, would result in greater environmental impacts than those of the Project, or it could not meet the Project objective.

1. NO-ACTION ALTERNATIVE

If the Commission were to deny TGP's application, the Project would not be built and the environmental impacts identified in this EA would not occur. Under this alternative, TGP would not be able to increase the transportation capacity of its existing system. As a result, the Project's objective would not be met.

As discussed in section C.2, we did not identify any other existing pipeline systems in the region that could provide the capacity of the Project; therefore, new natural gas facilities in the same region would be required to provide the subscribed Project capacity. TGP's proposal involves pipeline looping (rather than a new greenfield pipeline alignment); whereas the no-action alternative would require new natural gas facilities to meet the subscribed Project capacity, which would likely result in the construction of new facilities to meet the known demand for additional capacity. Such actions could result in impacts similar to or greater than the proposed Project, and would likely not meet the Project's purpose and need within the proposed timeframes. Therefore, we have concluded that the no-action alternative would not satisfy the Project objectives, and we are not recommending it.

2. SYSTEM ALTERNATIVES

System alternatives would make use of existing, modified, or proposed pipeline systems to meet the stated objectives of the Project. Although some modifications or additions to existing or proposed pipeline systems may be required, implementation of a system alternative would deem it unnecessary to construct all or part of the Project. These modifications or additions could result in environmental impacts that are less than, similar to, or greater than those associated with construction and operation of

the Project. The purpose of identifying and evaluating system alternatives is to determine whether the environmental impacts associated with construction and operation of the Project could be avoided or reduced by using another pipeline system, while still meeting the objectives of the Project.

TGP System Alternatives

Potential looping system alternatives on TGP's system would essentially shift the location of looped pipeline from one portion of TGP's 300-Line System to another. Our evaluation of the proposed loops concluded that construction and operation of the Project would not result in significant environmental impacts due in part to the Project being co-located within existing rights-of-way. As such, we did not consider any specific TGP looping system alternatives.

Other Company System Alternatives

There is significant fuel conversion-driven demand in the United States for additional supplies of natural gas to supply utility companies and other users. Because TGP currently operates a transmission system in the northeast, TGP can supply the increased demand for natural gas in this area using efficiencies afforded by its existing system. The Orion Project has a firm purchaser commitment and can meet the demand sooner than a hypothetical project not yet planned or committed. Further, the proposed loops were selected to minimize environmental impacts to the greatest extent possible while using existing rights-of-way to limit the need for construction on undisturbed lands. We did not identify any other existing systems in the area that could deliver the same quantities of gas, at similar locations, without substantial additional pipeline construction, which would likely include greenfield pipeline. Because the existing 300 Line already connects to the Project shippers' specified receipt and delivery points, the modification or expansion of another existing or new pipeline system that does not connect at or near the specified receipt and delivery points would require construction with similar or greater environmental impact than TGP's proposal. Therefore, we did not further evaluate the expansion of another existing pipeline system to meet the Project objectives.

3. LACKAWAXEN RIVER CROSSING ALTERNATIVES

We received comments that alternatives to TGP's proposed crossing of the Lackawaxen River should be considered. TGP proposes to cross the Lackawaxen River at approximately MP 10.4 along Loop 323 using the cofferdam crossing method (detailed in sections A.6.1.6 and B.2.1). In the event that the cofferdam crossing method is unable to be implemented, TGP indicates it would propose to cross the Lackawaxen River using the open cut method. Our environmental analysis in section B analyzed the impacts associated with TGP's proposed cofferdam crossing method. In this section we evaluate alternative crossing methods for the Lackawaxen River.

We considered five different methods for the Lackawaxen River crossing: cofferdam, horizontal directional drill (HDD), conventional bore/micro-tunneling, dam and pump, and open cut (wet) crossing. The conventional bore/micro-tunneling and dam and pump methods are neither technically feasible nor practical to accomplish at the proposed crossing location due to the depth and width of the Lackawaxen River and are not carried through in this analysis. The HDD crossing method is also not technically feasible due to geotechnically unfavorable surface and subsurface conditions, including vertical differences between the surface elevation at the entry and exit points, and gravel deposits with cobbles and boulders underlying the Lackawaxen River at this location. Further details regarding the technical feasibility of HDD crossing are included in section C.3.2. We also examined the HDD crossing method at an alternate location approximately 1.8 miles downstream of the proposed crossing location where surface conditions were more favorable. Table C.7-1 compares engineering and environmental factors associated with each crossing type analyzed.

TABLE C.7-1

Lackawaxen River Crossing Method Comparison

	Crossing Method			
	Cofferdam	HDD (Proposed Crossing Location)	Open cut	HDD (Alternative Crossing Location)
TECHNICALLY FEASIBLE	Yes	No	Yes	Yes
WORKSPACE REQUIREMENTS (acres)				
Forest	3.4	7.6	3.4	37.9
Open	19.4	11.8	18.9	6.3
Developed	0.4	0.1	0.2	3.4
Open Water	0.9	0.0	0.9	0.5
Total	24.1	19.6	23.4	48.1
SCHEDULE (days to complete)				
Total	65-75	180-200	36–48	180–200
Instream Work	40-50	NA	10–12	NA
TURBIDITY AND SEDIMENTATION	Minimal and Local Increase	None	150–290 ppm [a] Increase	None
STRUCTURES WITHIN 200 Feet	0	0	0	20
RECREATIONAL USE IMPACTS	Medium	Low	High	Low

[a] ppm = parts per million

3.1 Open Cut (Wet) Crossing Method

We evaluated the feasibility of crossing the Lackawaxen River using the open cut crossing method. As further described in section A.6.1.6, the open cut or wet crossing method consists of excavating a pipeline trench in a waterbody without diverting or pumping water from the workspace/crossing area. This method is technically feasible and would meet the Project objectives.

This crossing method would not involve the diversion or pumping of water from the workspace; therefore, it offers the minimal duration of instream activities (approximately 10 to 12 days). However, it would require the installation of a temporary equipment bridge, as well as a rock filter downstream of the crossing location, to catch sediment washed away from the workspace. The majority of additional workspace required for this crossing method would be in existing open spaces; similar to the impacts associated with the cofferdam crossing method (see table C.7-1). Peak suspended sediment concentrations would be expected during trench excavation and equipment bridge removal. Recreational use of the Lackawaxen River would be restricted during the construction phase of the river crossing; however, due to the shorter in-water work window, this restriction in use would be much shorter in duration for an open cut crossing than for the cofferdam method.

In the event that the cofferdam crossing method is unable to be implemented, TGP proposes to cross the Lackawaxen River using the open cut crossing method. This method has been identified by TGP as an alternate crossing method in the Section 401/404 permit application submitted to the USACE and PADEP. Because of the possibility of increased sedimentation and turbidity and the increased recreational impact, we did not find an open cut crossing environmentally preferable and thus we do not recommend it as the primary crossing method for the Lackawaxen River. However, if the cofferdam were to fail or otherwise not enable TGP to complete a successful crossing of the Lackawaxen River, we acknowledge that an open cut crossing would be acceptable, contingent upon TGP receiving the necessary permits from the USACE and/or NPS as well as approval from the FERC in accordance with established variance protocols (see recommended condition 5 in section D).

3.2 Horizontal Directional Drill Crossing Method

Proposed Crossing Location HDD

We evaluated the feasibility of crossing the Lackawaxen River using the HDD method. The HDD method allows for trenchless construction across an area by drilling a hole below the depth of a conventional lay, and then pulling a prefabricated section of pipe through the hole. This method is used to avoid direct impacts on sensitive environmental features or areas that otherwise present difficulties for standard pipeline construction. Although only a limited geotechnical study of the proposed crossing was completed, the Lackawaxen River area is underlain by gravel deposits with cobbles and boulders. Therefore, at the proposed crossing, the HDD method would pose a high risk for inadvertent returns (loss of drilling fluid) into the Lackawaxen River or surrounding upland areas, which would cause impacts on water quality and possibly on the recreational use of the river. Depending on the amount of an inadvertent release of drilling mud, there could also be downstream impacts on the Delaware River. In addition, the vertical topographic difference (160 feet) of the entry and exit holes for the HDD create a potential "dry hole" situation, which would increase the risk of lost tooling, stuck carrier pipe, and/or hole collapse.

Although the HDD method would require less overall workspace than the cofferdam and open cut methods (see table C.7-1), it would require additional workspace in forested areas to fabricate the entire length of pipe (approximately 1,500 feet long and 125 feet wide). This workspace would require the clearing of approximately 4.2 acres of trees, which could negatively affect interior-dwelling bird species as well as federally listed bat species if present in the area (see section B.3.4). Further, the HDD method would require 180 to 200 days to complete, which would be more than double the construction time of other crossing methods. Because of the increased impacts on forested areas and the geotechnical/and topographical conditions in the project area which could result in a failed HDD or a greater risk of inadvertent returns, we conclude that the HDD crossing method at the proposed cofferdam site is technically infeasible and not environmentally preferable, and we do not recommend it.

Alternate Crossing Location HDD

We also evaluated the HDD crossing method at an alternative crossing location approximately 1.8 miles downstream of the proposed crossing. The topography of the alternate site demonstrates level terrain on both sides of the river, which would reduce the risk of lost tooling, stuck carrier pipe, and/or hole collapse due to topographic concerns. However, subsurface characteristics are similar at this crossing location as compared to the proposed crossing location; therefore, the risk of inadvertent returns would be similar to the proposed crossing location. The alternative HDD crossing location would also require an additional 3.6 miles of new pipeline right-of-way, which would increase the amount of land that would need to be cleared by almost 5 times and would result in substantially more forest clearing (about 37.9 acres—see table C.7-1). In addition, 20 structures are within 200 feet of the right-of-way to the alternate site, which would result in additional residential impacts. Additional details regarding potential impacts associated with this crossing method are included in table C.7-1. Because of the increased impacts due to the additional 3.6 miles of new right-of-way that would be required and the geotechnical conditions being similar to proposed crossing location, we did not find the alternate crossing location HDD to be environmentally preferable, and we do not recommend it.

3.3 Lackawaxen River Crossing Conclusions

Based on information provided by TGP and our review, we conclude that both the cofferdam and open cut crossing methods are technically feasible, and, with sufficient mitigation, do not present significant environmental impacts. However, we find the proposed cofferdam crossing method to be environmentally preferable assuming that it can be successfully implemented based on in-stream flow conditions at the time of the crossing. In the event that the cofferdam crossing method is not able to be implemented for the Lackawaxen River crossing, TGP would be required to file a request for a revised crossing method with the FERC, including all associated regulatory approvals from the USACE, PADEP, and the NPS for their reviews under the Clean Water Act and the National Wild and Scenic Rivers Act prior to implementing the change. We also conclude that topographic and geologic concerns do not justify the use of the HDD method, either at the proposed crossing location or at the identified alternate crossing location.

D. CONCLUSIONS AND RECOMMENDATIONS

Based on the analysis in this EA, we have determined that if TGP constructs and operates the proposed facilities in accordance with its application and supplements and the staff's recommended mitigation measures, approval of this proposal would not constitute a major federal action significantly affecting the quality of the human environment. We recommend that the Order contain a finding of no significant impact and include the mitigation measures listed below as conditions to any Certificate the Commission may issue.

1. TGP shall follow the construction procedures and mitigation measures described in its application and supplements (including responses to staff data requests) and as identified in the EA, unless modified by the Order. TGP must:

    1. request any modification to these procedures, measures, or conditions in a filing with the Secretary;

    2. justify each modification relative to site-specific conditions;

    3. explain how that modification provides an equal or greater level of environmental protection than the original measure; and

    4. receive approval in writing from the Director of the OEP **before using that modification**.

2. The Director of OEP has delegated authority to take whatever steps are necessary to ensure the protection of all environmental resources during construction and operation of the Project. This authority shall allow:

    a. the modification of conditions of the Order; and

    b. the design and implementation of any additional measures deemed necessary (including stop-work authority) to assure continued compliance with the intent of the environmental conditions as well as the avoidance or mitigation of adverse environmental impact resulting from Project construction and operation.

3. **Prior to any construction**, TGP shall file an affirmative statement with the Secretary, certified by a senior company official, that all company personnel, EIs, and contractor personnel will be informed of the EI's authority and have been or will be trained on the implementation of the environmental mitigation measures appropriate to their jobs **before** becoming involved with construction and restoration activities.

4. The authorized facility locations shall be as shown in the EA, as supplemented by filed alignment sheets. **As soon as they are available, and before the start of construction**, TGP shall file with the Secretary any revised detailed survey alignment maps/sheets at a scale not smaller than 1:6,000 with station positions for all facilities approved by the Order. All requests for modifications of environmental conditions of the Order or site-specific clearances must be written and must reference locations designated on these alignment maps/sheets.

    TGP's exercise of eminent domain authority granted under NGA section 7(h) in any condemnation proceedings related to the Order must be consistent with these authorized facilities and locations. TGP's right of eminent domain granted under NGA section 7(h) does not authorize them to increase the size of their natural gas facilities to accommodate future needs or to acquire a right-of-way for a pipeline to transport a commodity other than natural gas.

5. TGP shall file with the Secretary detailed alignment maps/sheets and aerial photographs at a scale not smaller than 1:6,000 identifying all route realignments or facility relocations, and staging areas, pipe storage yards, new access roads, and other areas that would be used or disturbed and have not been previously identified in filings with the Secretary. Approval for each of these areas must be explicitly requested in writing. For each area, the request must include a description of the existing land use/cover type, documentation of landowner approval, whether any cultural resources or federally listed threatened or endangered species would be affected, and whether any other environmentally sensitive areas are within or abutting the area. All areas shall be clearly identified on the maps/sheets/aerial photographs. Each area must be approved in writing by the Director of OEP **before construction in or near that area**.

   This requirement does not apply to extra workspace allowed by our Plan and/or minor field realignments per landowner needs and requirements that do not affect other landowners or sensitive environmental areas such as wetlands.

   Examples of alterations requiring approval include all route realignments and facility location changes resulting from:

   a. implementation of cultural resources mitigation measures;

   b. implementation of endangered, threatened, or special concern species mitigation measures;

   c. recommendations by state regulatory authorities; and

   d. agreements with individual landowners that affect other landowners or could affect sensitive environmental areas.

6. **Within 60 days of the acceptance of the Certificate and before construction begins**, TGP shall file an Implementation Plan with the Secretary for review and written approval by the Director of OEP. TGP must file revisions to its plan as schedules change. The plan shall identify:

   a. how TGP will implement the construction procedures and mitigation measures described in its application and supplements (including responses to staff data requests), identified in the EA, and required by the Order;

   b. how TGP will incorporate these requirements into the contract bid documents, construction contracts (especially penalty clauses and specifications), and construction drawings so that the mitigation required at each site is clear to on-site construction and inspection personnel;

   c. the number of EIs assigned, and how TGP will ensure that sufficient personnel are available to implement the environmental mitigation;

   d. TGP personnel, including EIs and contractors, who will receive copies of the appropriate material;

   e. the location and dates of the environmental compliance training and instructions TGP will give to all personnel involved with construction and restoration (initial and refresher training as the Project progresses and personnel change);

f. TGP personnel (if known) and specific portion of TGP's organization having responsibility for compliance;

g. the procedures (including use of contract penalties) TGP will follow if noncompliance occurs; and

h. for each discrete facility, a Gantt or Program Evaluation Review Technique chart (or similar Project scheduling diagram), and dates for:

   i. the completion of all required surveys and reports;
   ii. the environmental compliance training of on-site personnel;
   iii. the start of construction; and
   iv. the start and completion of restoration.

7. Beginning with the filing of its Implementation Plan, TGP shall file updated status reports with the Secretary on a **biweekly basis until all construction and restoration activities are complete**. On request, these status reports will also be provided to other federal and state agencies with permitting responsibilities. Status reports shall include:

   a. an update on efforts to obtain the necessary federal authorizations;

   b. the construction status of the Project, work planned for the following reporting period, and any schedule changes for stream crossings or work in other environmentally sensitive areas;

   c. a listing of all problems encountered and each instance of noncompliance observed by the EI(s) during the reporting period (both for the conditions imposed by the Commission and any environmental conditions/permit requirements imposed by other federal, state, or local agencies);

   d. a description of the corrective actions implemented in response to all instances of noncompliance, and their cost;

   e. the effectiveness of all corrective actions implemented;

   f. a description of any landowner/resident complaints which may relate to compliance with the requirements of the Order, and the measures taken to satisfy their concerns; and

   g. copies of any correspondence received by TGP from other federal, state, or local permitting agencies concerning instances of noncompliance, and TGP's response.

8. **Prior to receiving written authorization from the Director of OEP to commence construction of any Project facilities**, TGP shall file with the Secretary documentation that it has received all applicable authorizations required under federal law (or evidence of waiver thereof).

9. TGP must receive written authorization from the Director of OEP **before placing the Project into service**. Such authorization will only be granted following a determination that rehabilitation and restoration of the right-of-way and other areas affected by the Project are proceeding satisfactorily.

10. **Within 30 days of placing the authorized facilities in service**, TGP shall file an affirmative statement with the Secretary, certified by a senior company official:

    a. that the facilities have been constructed in compliance with all applicable conditions, and that continuing activities will be consistent with all applicable conditions; or

    b. identifying which of the Certificate conditions the company has complied with or will comply with. This statement shall also identify any areas affected by the Project where compliance measures were not properly implemented, if not previously identified in filed status reports, and the reason for noncompliance.

11. **Prior to construction**, TGP shall file with the Secretary updated information regarding how wetland mitigation areas established as part of the NEUP and 300 Line Projects could be impacted by the Orion Project. TGP's filing shall include correspondence between TGP and the landowner, the Delaware Highlands Conservancy, and the USACE, as appropriate; and shall discuss measures that would minimize impacts on these mitigation areas.

12. **Prior to construction**, TGP shall file with the Secretary, for the review and written approval of the Director of the OEP, an American chestnut tree restoration plan. The restoration plan shall:

    a. identify the location of American chestnut trees planted in the previously disturbed temporary construction right-of-way as part of reforestation activities associated with 300 Line construction, <u>and</u> that will be disturbed by construction of the Orion Project; and

    b. detail how TGP will restore these plantings where feasible and agreed upon by the landowner.

13. **Prior to construction**, TGP shall file with the Secretary, for the review and written approval of the Director of OEP, evidence of landowner concurrence with the site-specific residential construction plans for the residences at MP 6.7 (EA appendix C, Figure C-2, Tract No. 883) and MP 7.6 (EA appendix C, Figure C-3, Tract No. 889.02) where proposed Project construction work areas are in close proximity to the residences.

14. TGP shall develop and implement Project-specific environmental complaint resolution procedures. The procedures shall provide landowners with clear and simple directions for identifying and resolving their environmental mitigation problems/concerns during construction of the Project, and during restoration of the Project rights-of-way. **Prior to construction of the Project**, TGP shall mail the complaint procedures to each landowner whose property will be crossed.

    a. **In its letter to affected landowners, TGP shall:**

        i. provide a local contact that the landowners should call first with their concerns; the letter shall indicate how soon a landowner should expect a response;

        ii. instruct the landowners that if they are not satisfied with the response, they shall call TGP's Hotline (the letter shall indicate how soon to expect a response); and

        iii. instruct the landowners that if they are still not satisfied with the response from TGP's Hotline, they should contact the Commission's Landowner Helpline at 877-337-2237 or at LandownerHelp@ferc.gov.

b. In addition, TGP shall include in its biweekly status report for the Project a copy of a table that contains the following information for each problem/concern:

i. the identity of the caller and date of the call;

ii. the location by milepost and identification number from the authorized alignment sheet(s) of the affected property;

iii. a description of the problem/concern; and

iv. an explanation of how and when the problem was resolved, will be resolved, or why it has not been resolved.

15. **Prior to construction**, TGP shall file with the Secretary, for the review and written approval of the Director of the OEP, a plan to minimize Project-related tree clearing on each parcel of land enrolled in the Clean and Green Program that contains a forested component. This plan shall demonstrate how Project construction and operation will not affect the property's eligibility in the program. In the event TGP is not able to avoid disqualifying a property from the program, TGP shall describe how it will compensate the affected landowner.

16. TGP shall not begin construction of facilities and/or use of staging, storage, or temporary work areas and new or to-be-improved access roads **until**:

a. TGP files with the Secretary the Pennsylvania SHPO's comments on the:

i. Final Phase I Archaeological Investigation Report; and

ii. Phase I Cultural Resources Survey Report for the Lackawaxen Creek Restoration Site.

b. The FERC staff reviews and the Director of OEP approves the cultural resources reports and notifies TGP in writing that construction may proceed.

All materials filed with the Commission containing location, character, and ownership information about cultural resources have the cover and any relevant pages therein clearly labeled in bold lettering: **"CONTAINS PRIVILEGED INFORMATION - DO NOT RELEASE."**

E. REFERENCES

Centers for Disease Control and Prevention. 2013. Deaths: Final Data for 2013. Available online at: http://www.cdc.gov/nchs/data/nvsr/nvsr64/nvsr64_02.pdf. Accessed February 2016.

Delaware River Basin Commission. 2015. Watersheds of the Delaware River Basin. Available online at: http://www.nj.gov/drbc/library/documents/maps/BasinPlan_watershedsmap.pdf. Accessed April 2015.

Federal Emergency Management Agency. 2016. National Flood Hazard Layer (Official). Available online at: http://fema.maps.arcgis.com/home/. Accessed May 2016.

Federal Energy Regulatory Commission. 2010. 300 Line Project Environmental Assessment: Issued February 2010. Docket # CP09-444. Available online at: http://www.ferc.gov/docs-filing/elibrary.asp. Accessed May 2016.

Federal Energy Regulatory Commission. 2011. Northeast Upgrade Project Environmental Assessment: Issued February 2010. Docket # CP11-161. Available online at: http://www.ferc.gov/docs-filing/elibrary.asp. Accessed May 2016.

Federal Energy Regulatory Commission. 2015. Order on Remand: Issued November 19, 2015. Available online at: https://www.ferc.gov/whats-new/comm-meet/2015/111915/C-2.pdf. Accessed February 2016.

Fleeger, G.M. 1999. The Geology of Pennsylvania's Groundwater (3rd ed.): Pennsylvania Geological Survey, 4th Series, Educational Series 3. 34 pages.

Homer, C.G., J.A. Dewitz, L. Yang, S. Jin, P. Danielson, G. Xian, J. Coulston, N.D. Herold, J.D. Wickham, and K. Megown. 2015. Completion of the 2011 National Land Cover Database for the conterminous United States-Representing a decade of land cover change information. Photogrammetric Engineering and Remote Sensing, v. 81, no. 5, p. 345–354.

National Oceanic and Atmospheric Administration. 2016. National Hazard Statistics, 30-Year Average (1985–2014). National Weather Service, Office of Climate, Water and Weather Services. Available online at: http://www.nws.noaa.gov/om/hazstats.shtml. Accessed February 2016.

National Park Service. n.d. Foundation Document Overview: Upper Delaware Scenic and Recreational River: Purpose and Management Goals. Available online at: https://www.nps.gov/upde/learn/management/upload/UPDE_OV_SP.pdf. Accessed May 2016.

Natural Resources Conservation Service Soil Survey Division Staff. 1993. Soil Survey Manual. Soil Conservation Service. U.S. Department of Agriculture Agricultural Handbook 18.

Natural Resources Conservation Service Soil Survey Staff. 2016a. Web Soil Survey. Available online at: http://websoilsurvey.sc.egov.usda.gov/App/HomePage.htm. Accessed October 2015 and May 2016.

Natural Resources Conservation Service Soil Survey Staff. 2016b. Official Soil Series Descriptions. Available online at: https://soilseries.sc.egov.usda.gov/osdname.asp. Accessed May 2016.

Peltier, R. and S. Villacorta. 2015. Phase I Historic Resources Survey Report, Orion Project. ER# 2015-2068-045-A, Wayne and Pike Counties, September 2016. Technical report prepared for TGP Gas Pipeline Company, LLC by Tetra Tech, Inc.

Pennsylvania Bulletin. 2016. Water Quality Management Permits: Controlled Industrial Waste and Sewage Wastewater Applications Under the Clean Streams Law Part II Permits. Available online at: http://www.pabulletin.com/secure/data/vol32/32-16/625a.html. Accessed May 2016.

Pennsylvania Department of Conservation and Natural Resources. 2014a. Map 13, Physiographic Provinces of Pennsylvania. Commonwealth of Pennsylvania, Department of Conservation and Natural Resources, Bureau of Topographic and Geologic Survey. Available online at: http://www.dcnr.state.pa.us/topogeo/field/map13/index.htm. Accessed December 2014.

Pennsylvania Department of Conservation and Natural Resources. 2014b. Glaciated Low Plateau Section, Appalachian Plateaus. Commonwealth of Pennsylvania, Department of Conservation and Natural Resources, Bureau of Topographic and Geologic Survey. Available online at: http://www.dcnr.state.pa.us/topogeo/field/map13/13glps/index.htm. Accessed December 2014.

Pennsylvania Department of Conservation and Natural Resources. 2015. Bureau of Topographic and Geologic Survey PaGWIS database. Available online at: http://www.dcnr.state.pa.us/topogeo/groundwater/pagwis/downloads/index.htm. Accessed July 29, 2015.

Pennsylvania Department of Conservation and Natural Resources. 2016a. Landforms of Pennsylvania. Available online at: http://www.dcnr.state.pa.us/topogeo/field/map13/index.htm. Accessed May 2016.

Pennsylvania Department of Conservation and Natural Resources. 2016b. Areas of Pennsylvania Susceptible to Landslides. Available online at: http://www.dcnr.state.pa.us/topogeo/hazards/landslides/slideareas/index.htm. Accessed May 2016.

Pennsylvania Department of Environmental Protection. 2015. Oil & Gas Locations – Conventional Unconventional. Available online at: http://www.pasda.psu.edu/. Accessed October 2015.

Pennsylvania Department of Transportation. 2014. Traffic Volume Maps. Available online at: http://www.penndot.gov/ProjectAndPrograms/Planning/Maps/Pages/Traffic-Volume.aspx. Accessed June 2016.

Pennsylvania Spatial Data Access. 2016. Pennsylvania Atlas. Available online at: http://maps.psiee.psu.edu/paatlas/. Accessed May 2016.

Pike County. 2008. Growing…Naturally: The Pike County Open Space, Greenways, and Recreation Plan. Prepared by Pike County Office Community Planning for the Pike County Board of Commissioners and Pike County Planning Commission. Available online at: http://www.dcnr.state.pa.us/cs/groups/public/documents/document/d_001207.pdf. Accessed May 2016.

Stuck, K. and S. Johnston. 2016. Addendum Phase I Archaeological Investigations Report, Orion Project. ER# 2015-0268-042, Wayne and Pike Counties, February 2016. Technical report prepared for TGP Gas Pipeline Company, LLC by Tetra Tech, Inc.

Stuck, K., S. Johnston, and S. Padamonsky. 2015. Phase I Archaeological Investigations Report, Orion Project. ER# 2015-2068-045-A, Wayne and Pike Counties, September 2015. Technical report prepared for TGP Gas Pipeline Company, LLC by Tetra Tech, Inc.

Tyrer and Muir. March 2016. Phase I Cultural Resources Survey of Lackawaxen Creek Restoration Site. Prepared for: Resource Environmental Solutions, L.L.C. Prepared by: Circa~ Cultural Resource Management, L.L.C.

U.S. Department of Labor. 2007. Consumer Price Index - Bureau of Labor Statistics. Census of Occupational Injuries. Available online at: http://www.bls.gov/iif/. Accessed May 2016.

U.S. Department of Transportation Pipeline and Hazardous Materials Safety Administration. 2016. Oracle BI Interactive Dashboard Website for Significant Transmission Pipeline Incidents. Available online at: http://www.phmsa.dot.gov/pipeline/library/data-stats. Accessed February 2016.

U.S. Department of Transportation Pipeline and Hazardous Materials Safety Administration. 2015. Pipeline Incident Flagged Files Website. Available online at: http://phmsa.dot.gov/pipeline/library/data-stats/flagged-data-files. Accessed March 2015.

U.S. Environmental Protection Agency. 2011. National Priorities List (NPL) Sites in Pennsylvania. Available online at: http://www.epa.gov/superfund/sites/npl/pa.htm#statelist. Accessed July 2015.

U.S. Environmental Protection Agency. 2015a. Sole Source Aquifers, Regions 2 and 3. Available online at: http://water.epa.gov/infrastructure/drinkingwater/sourcewater/protection/solesourceaquifer.cfm. Accessed July 2016.

U.S. Environmental Protection Agency. 2015b. Envirofacts. Available online at: http://www.epa.gov/enviro/index.html. Accessed July 2015.

U.S. Environmental Protection Agency. 2016. Sole Source Aquifers for Drinking Water. Available online at: http://fema.maps.arcgis.com/home/. Accessed April 2016.

U.S. Geological Survey. 2006. Quaternary Fault and Fold Database of the United States. Available online at: http://earthquake.usgs.gov/hazards/qfaults/. Accessed May 2016.

Weary, D.J., and Doctor, D.H. 2014. Karst in the United States: A digital map compilation and database. U.S. Geological Survey Open-File Report 2014-1156. Available online at http://pubs.usgs.gov/of/2014/1156/. Accessed May 2016.

APPENDIX A

PROJECT MAPS

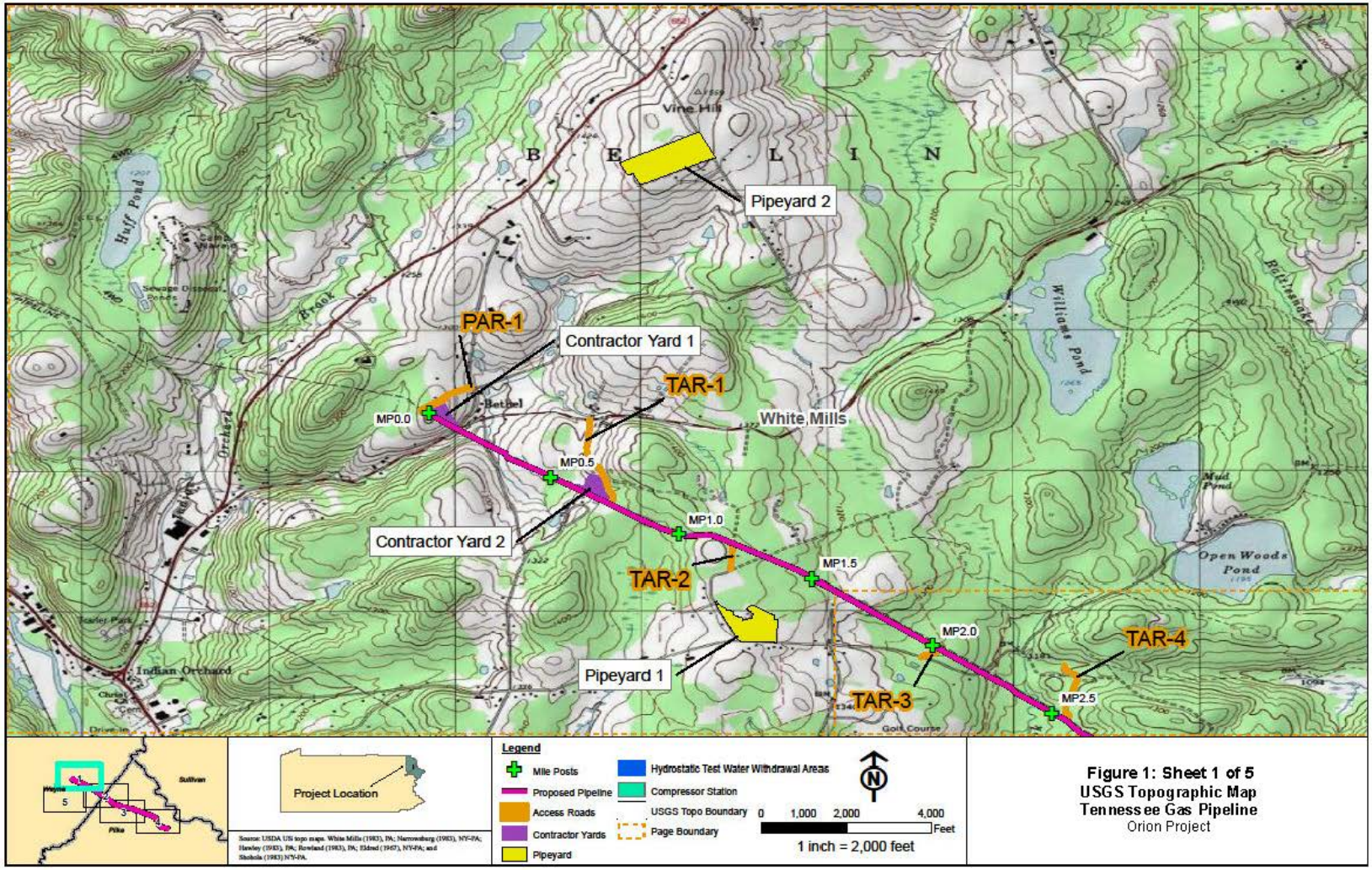

Figure 1: Sheet 1 of 5
USGS Topographic Map
Tennessee Gas Pipeline
Orion Project

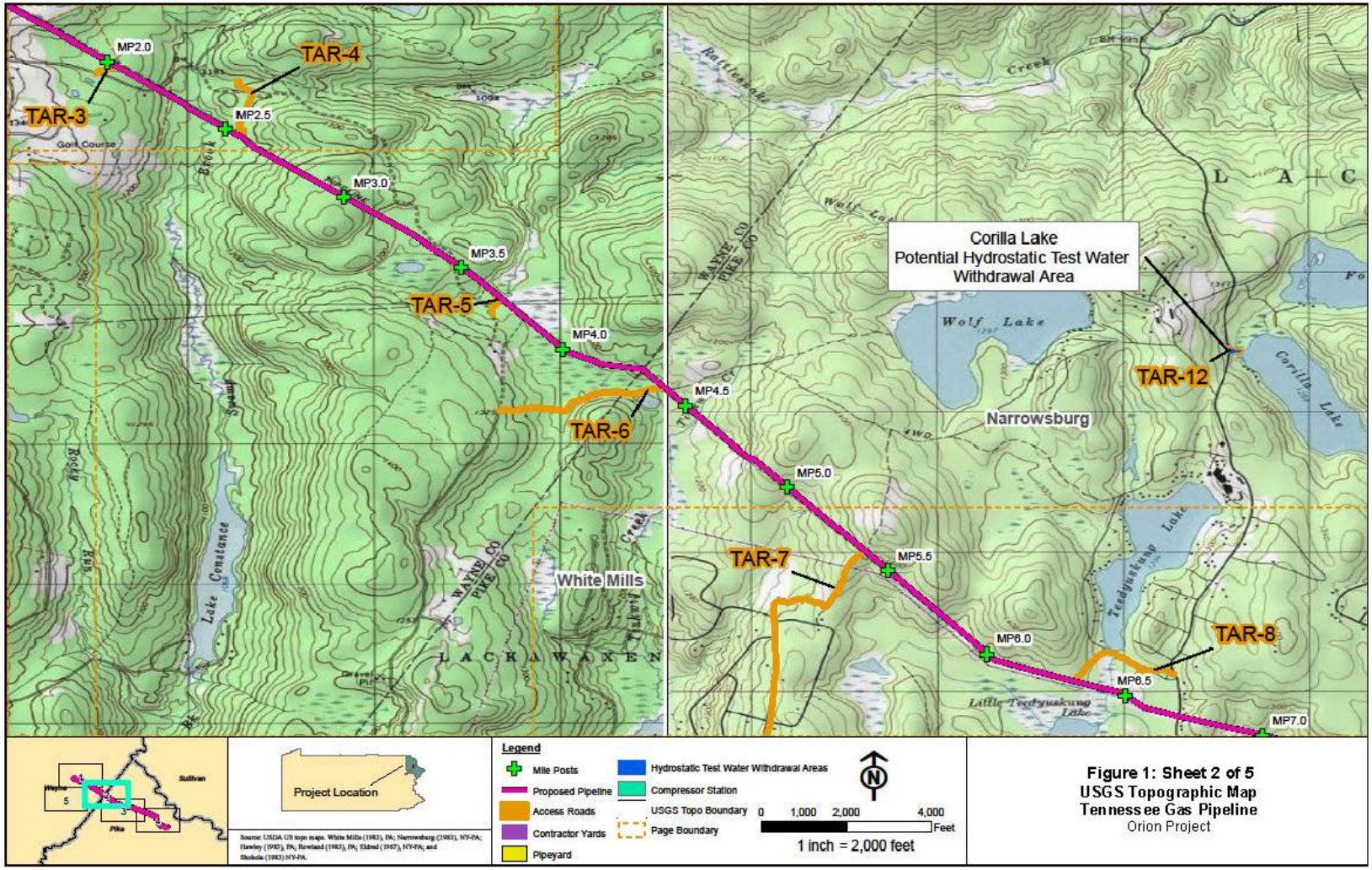

Figure 1: Sheet 2 of 5
USGS Topographic Map
Tennessee Gas Pipeline
Orion Project

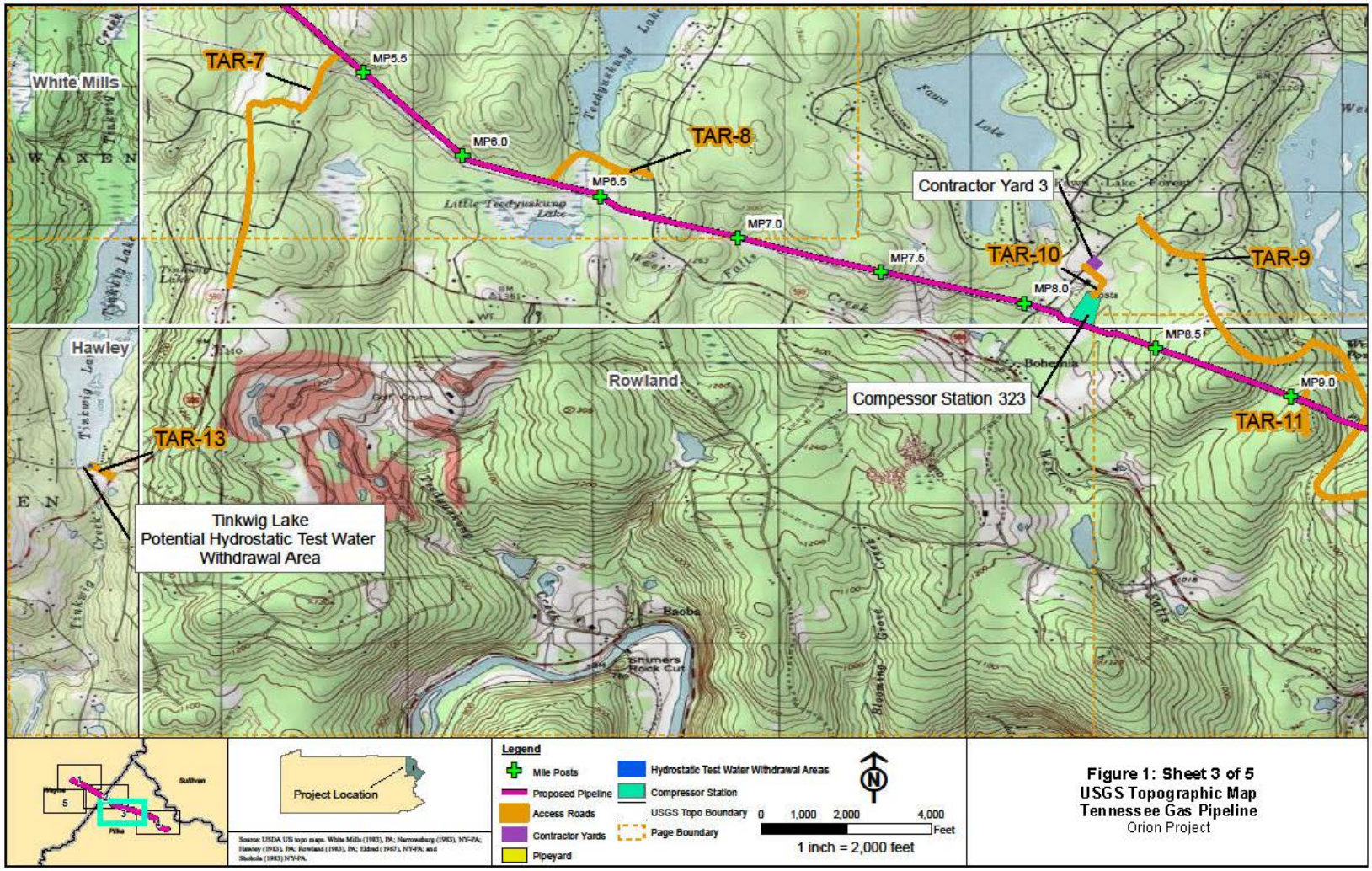

Figure 1: Sheet 3 of 5
USGS Topographic Map
Tennessee Gas Pipeline
Orion Project

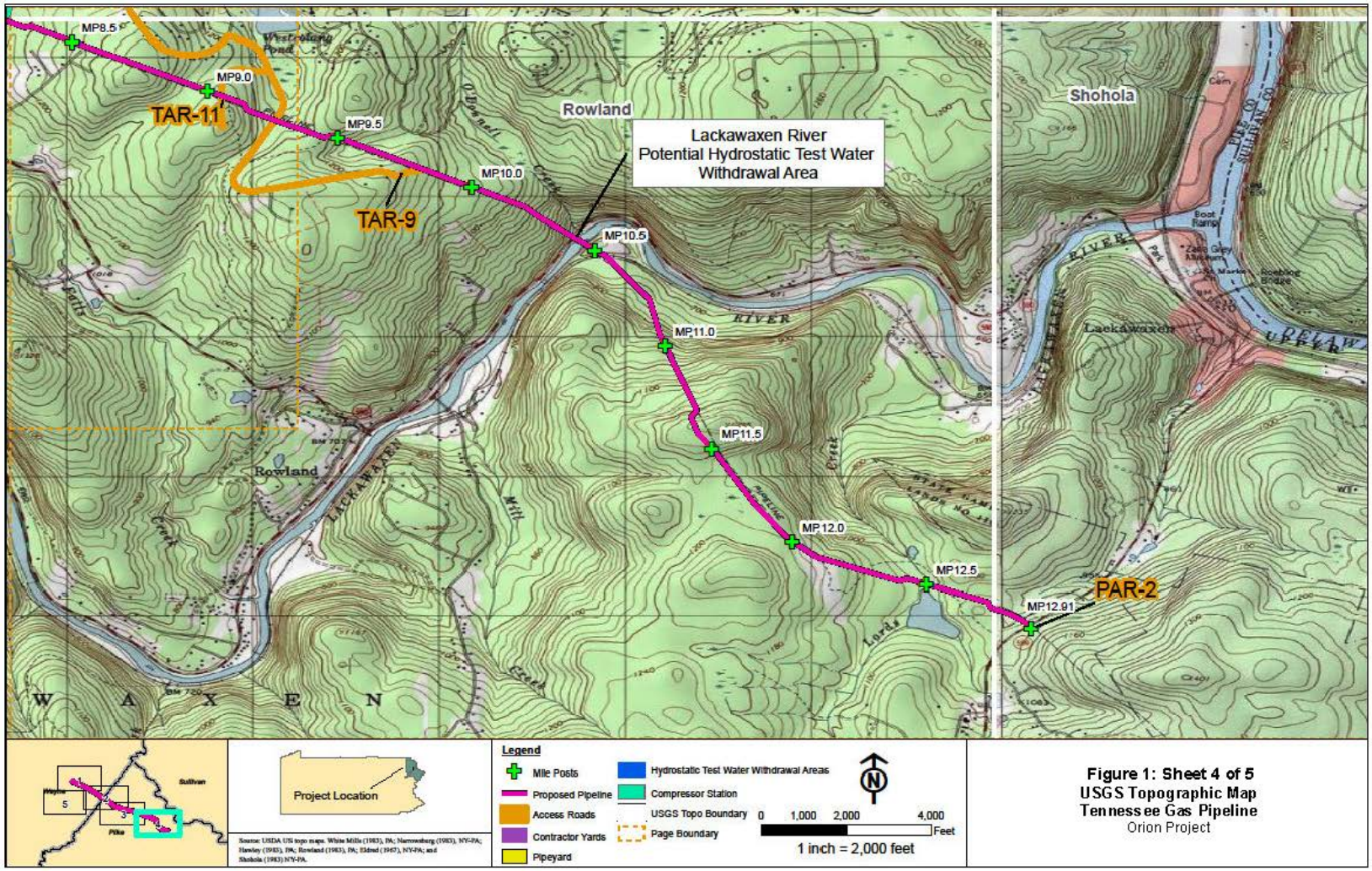

Figure 1: Sheet 4 of 5
USGS Topographic Map
Tennessee Gas Pipeline
Orion Project

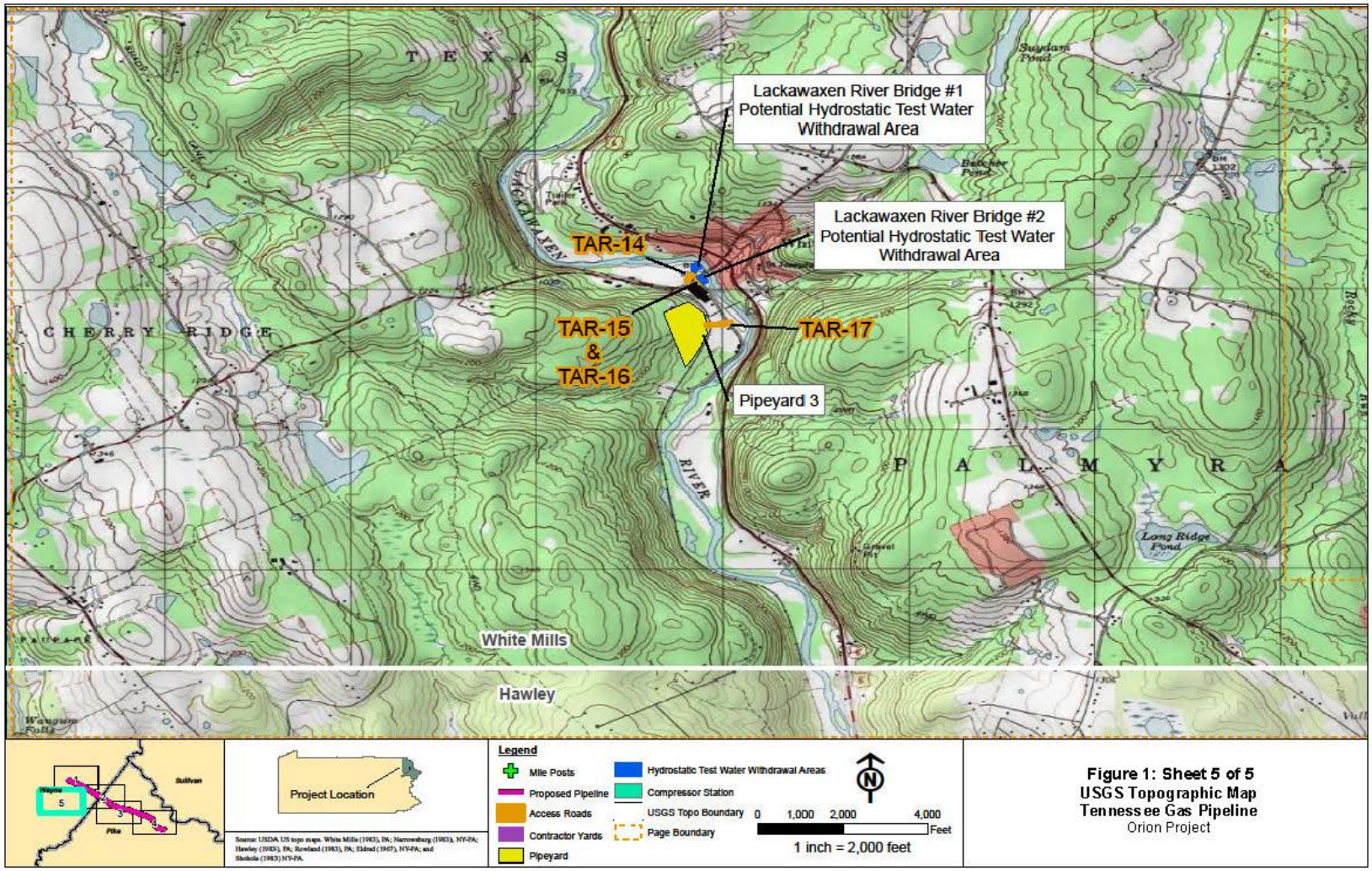

Figure 1: Sheet 5 of 5
USGS Topographic Map
Tennessee Gas Pipeline
Orion Project

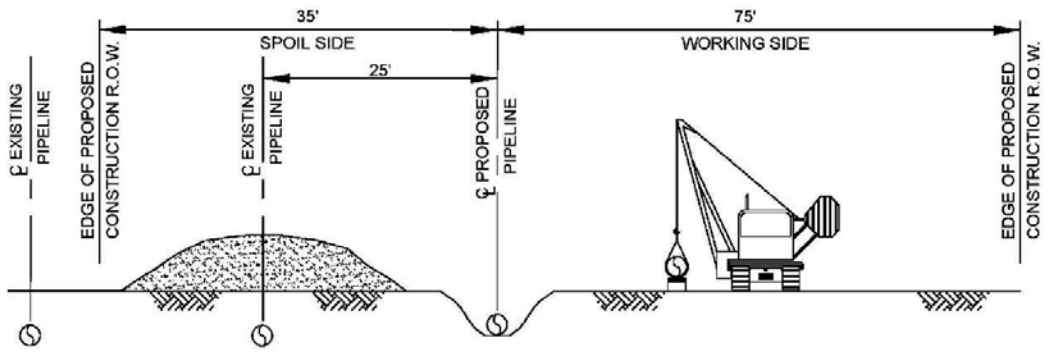

PROFILE
(NOT TO SCALE)

NOTES:

1. CONSTRUCTION RIGHT-OF-WAY WILL TYPICALLY BE 110' WIDE. EXTRA TEMPORARY WORKSPACE WILL BE NECESSARY AT MAJOR ROAD, RAIL, RIVER CROSSINGS AND OTHER SPECIAL CIRCUMSTANCES, AS REQUIRED. CERTAIN SITUATIONS MAY REQUIRE A NARROWER WIDTH.
2. LEAVE GAPS IN SPOIL PILES AT OBVIOUS DRAINAGES. DO NOT PUSH UPLAND SOILS INTO CREEKS OR WETLANDS. DO NOT USE TOPSOIL FOR PADDING. AVOID SCALPING VEGETATED GROUND SURFACE WHEN BACKFILLING TOPSOIL AND SPOIL PILES.
3. THE OFFSET FROM EXISTING PIPELINE, WHERE APPLICABLE, WILL BE 25', BUT MAY BE INCREASED OR DECREASED DEPENDING ON THE SITE SPECIFIC CONSTRUCTION REQUIREMENTS.
4. SAME LAYOUT APPLIES WHERE CONSTRUCTION R.O.W. DOES NOT ABUT EXISTING R.O.W.
5. BOTTOM OF TRENCH WIDTH WILL BE AN AVERAGE OF 5' (TYPICAL) HOWEVER, UNDER CERTAIN CIRCUMSTANCES, THE TRENCH MAY BE A MAXIMUM OF 10' WIDE.

ENG. RECORD		DATE
DRAWN BY:		
DRAWING APPROVAL		
PROJECT APPROVAL		
SURVEY DATE:		
SCALE: NONE		
PROJECT ID:		
FILE NAME:		

Figure 2: Typical Construction Right-of-Way Cross Section - Co-Located with 300 Line Pipeline Tennessee Gas Pipeline

Orion Project

DWG. NO. R1A

NO	DATE	BY	DESCRIPTION	PROJ. ID	APPR.

REVISIONS

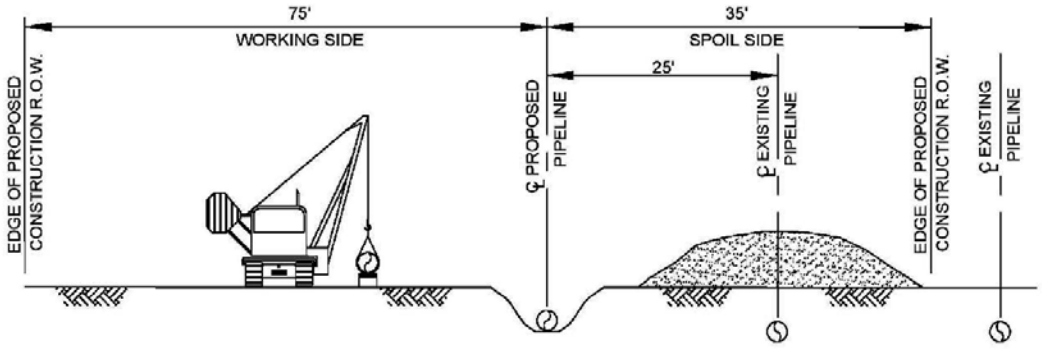

NOT TO SCALE

NOTES:

1. CONSTRUCTION RIGHT-OF-WAY WILL TYPICALLY BE 110' WIDE. EXTRA TEMPORARY WORKSPACE WILL BE NECESSARY AT MAJOR ROAD, RAIL, RIVER CROSSINGS AND OTHER SPECIAL CIRCUMSTANCES, AS REQUIRED. CERTAIN SITUATIONS MAY REQUIRE A NARROWER WIDTH.
2. LEAVE GAPS IN SPOIL PILES AT OBVIOUS DRAINAGES. DO NOT PUSH UPLAND SOILS INTO CREEKS OR WETLANDS. DO NOT USE TOPSOIL FOR PADDING. AVOID SCALPING VEGETATED GROUND SURFACE WHEN BACKFILLING TOPSOIL AND SPOIL PILES.
3. THE OFFSET FROM EXISTING PIPELINE, WHERE APPLICABLE, WILL BE 25', BUT MAY BE INCREASED OR DECREASED DEPENDING ON THE SITE SPECIFIC CONSTRUCTION REQUIREMENTS.
4. SAME LAYOUT APPLIES WHERE CONSTRUCTION R.O.W. DOES NOT ABUT EXISTING R.O.W.
5. BOTTOM OF TRENCH WIDTH WILL BE AN AVERAGE OF 5' (TYPICAL) HOWEVER, UNDER CERTAIN CIRCUMSTANCES, THE TRENCH MAY BE A MAXIMUM OF 10' WIDE.

ENG. RECORD		DATE
DRAWN BY:		
DRAWING APPROVAL		
PROJECT APPROVAL		
SURVEY DATE:		
SCALE: NONE		
PROJECT ID:		
FILE NAME:		

NO	DATE	BY	DESCRIPTION	PROJ. ID	APPR.

REVISIONS

Figure 3: Typical Construction Right-of-Way Cross Section - Co-located with 300 Line Pipeline Tennessee Gas Pipeline

Orion Project

DWG. NO. R1B

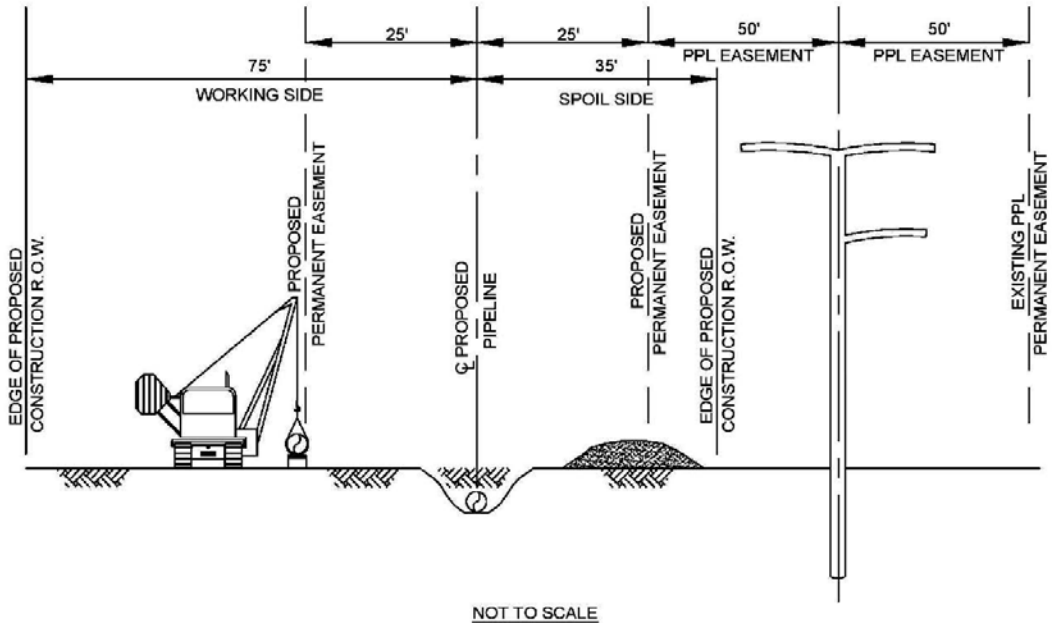

NOT TO SCALE

NOTES:

1. CONSTRUCTION RIGHT-OF-WAY WILL TYPICALLY BE 110' WIDE. EXTRA TEMPORARY WORKSPACE WILL BE NECESSARY AT MAJOR ROAD, RAIL, RIVER CROSSINGS AND OTHER SPECIAL CIRCUMSTANCES, AS REQUIRED. CERTAIN SITUATIONS MAY REQUIRE A NARROWER WIDTH.
2. CONSTRUCTION RIGHT-OF-WAY WILL TYPICALLY OVERLAP 10' OF THE EXISTING PPL EASEMENT. EXCEPT FOR CROSSOVERS, THE PROPOSED PIPELINE PERMANENT EASEMENT IS ADJACENT TO THE EXISTING PPL EASEMENT.
3. LEAVE GAPS IN SPOIL PILES AT OBVIOUS DRAINAGES. DO NOT PUSH UPLAND SOILS INTO CREEKS OR WETLANDS. DO NOT USE TOPSOIL FOR PADDING. AVOID SCALPING VEGETATED GROUND SURFACE WHEN BACKFILLING TOPSOIL AND SPOIL PILES.
3. THE OFFSET FROM EXISTING PIPELINE, WHERE APPLICABLE, WILL BE 25', BUT MAY BE INCREASED OR DECREASED DEPENDING ON THE SITE SPECIFIC CONSTRUCTION REQUIREMENTS.
4. SAME LAYOUT APPLIES WHERE CONSTRUCTION R.O.W. DOES NOT ABUT EXISTING R.O.W.
5. BOTTOM OF TRENCH WIDTH WILL BE AN AVERAGE OF 5' (TYPICAL) HOWEVER, UNDER CERTAIN CIRCUMSTANCES, THE TRENCH MAY BE A MAXIMUM OF 10' WIDE.

ENG. RECORD		DATE
DRAWN BY:		
DRAWING APPROVAL		
PROJECT APPROVAL		
SURVEY DATE:		
SCALE: NONE		
PROJECT ID:		
FILE NAME:		

NO	DATE	BY	DESCRIPTION	PROJ. ID	APPR.

REVISIONS

Figure 4: Typical Construction Right-of-Way Cross Section - Co-located with Electric Transmission Line
Tennessee Gas Pipeline
Orion Project

DWG. NO. R1C

APPENDIX B

OVERSIZED TABLES

TABLE 1

Waterbody Crossings

Waterbody ID	Waterbody Name	Location (Milepost/ Access Road)	Waterbody Type	Bank-to-Bank Crossing Width (feet)	State Water Quality Classification [a]	Construction Crossing Method [b]
PIPELINE (LOOP 322 and LOOP 323)						
S1a	UNT to Indian Orchard Brook	0.17	Perennial	10	HQ-CWF	Dry
S4a	UNT to Indian Orchard Brook	0.24	Perennial	5	HQ-CWF	Dry
L3 S003	UNT to Indian Orchard Brook	0.56	Intermittent	3.5	HQ-CWF	Dry
S6a	UNT to Swamp Brook	1.93	Perennial	4	HQ-CWF	Dry
S9a	UNT to Swamp Brook	2.26	Intermittent	4	Drains to HQ-CWF	Dry
S8a	Swamp Brook	2.37	Perennial	20	HQ-CWF	Dry
S13a	UNT to Rattlesnake Creek	3.65	Intermittent	3	Drains to HQ-CWF	Dry
S11a	UNT to Rattlesnake Creek	4.32	Ephemeral	2	Drains to HQ-CWF	Temporary Road Crossing Only
S12a	UNT to Rattlesnake Creek	4.37	Intermittent	2	Drains to HQ-CWF	Dry
S15a	Tinkwig Creek	4.56	Perennial	6	HQ-CWF	Dry
S5c	UNT to West Falls Creek	6.43	Perennial	10	Drains to HQ-CWF	Open Cut
S18b	UNT to West Falls Creek	6.94	Ephemeral	1	Drains to HQ-CWF	Dry
S14b	UNT to West Falls Creek	7.66	Perennial	15	HQ-CWF	Dry
S10b	UNT to West Falls Creek	7.84	Perennial	1	Drains to HQ-CWF	Dry
S6b	UNT to West Falls Creek	8.04	Perennial	12	HQ-CWF	Dry
S9b	UNT to West Falls Creek	8.06	Perennial	2	Drains to HQ-CWF	Dry
S22b	UNT to West Falls Creek	8.28	Perennial	8	Drains to HQ-CWF	Dry
S23b	UNT to Westcolang Creek	9.26	Perennial	3	Drains to HQ-CWF	Dry
S24b	UNT to Westcolang Creek	9.27	Perennial	3	Drains to HQ-CWF	Dry
S25b	UNT to Westcolang Creek	9.28	Ephemeral	3	Drains to HQ-CWF	Temporary Road Crossing Only
S21a	UNT to O'Donnell Creek	9.59	Intermittent	3	Drains to HQ-CWF	Temporary Road Crossing Only
PIPELINE (LOOP 322 and LOOP 323)						
S23a	O'Donnell Creek	10.40	Perennial	4	HQ-CWF	Temporary Road Crossing Only
S1x	UNT to Lackawaxen River	10.40	Flowing Ditch	2	Drains to HQ-TSF	Avoided
S22a	Lackawaxen River	10.41	Perennial	250	HQ-TSF	Cofferdam(Dry) / Open Cut (Contingency)

TABLE 1

Waterbody Crossings

Waterbody ID	Waterbody Name	Location (Milepost/ Access Road)	Waterbody Type	Bank-to-Bank Crossing Width (feet)	State Water Quality Classification [a]	Construction Crossing Method [b]
S18a	UNT to Lackawaxen River	10.59	Ephemeral	1	Drains to HQ-TSF	Dry
S19a	UNT to Lords Creek	11.66	Ephemeral	1	Drains to HQ-CWF	Dry
S20a	Lords Creek	12.51	Perennial	6	HQ-CWF	Dry
TAR 6						
S10a	UNT to Rattlesnake Creek	NA	Ephemeral	55	Drains to HQ-CWF	Existing Culvert
TAR 7						
S1b	UNT to Tinkwig Creek	NA	Perennial	4	Drains to HQ-CWF	Dry
TAR 8						
S5b	UNT to West Falls Creek	NA	Perennial	6	Drains to HQ-CWF	Dry
S5c	UNT to West Falls Creek	NA	Perennial	20	Drains to HQ-CWF	Temporary Culvert/Gravel Installation

TAR = Temporary Access Road; UNT = unnamed tributary; NA = not applicable; ATWS = additional temporary workspace

[a] 25 Pa. Code 93, Designated Water Uses and Water Quality Criteria. HQ = High Quality Waters (designated use) – surface waters having quality which exceeds levels necessary to support propagation of fish, shellfish, and wildlife and recreation in and on the water by satisfying 25 Pa. Code §93.4b(a); CWF = Coldwater Fishery (designated use) – maintenance or propagation, or both, of fish species including the family Salmonidae and additional flora and fauna which are indigenous to a cold water habitat; TSF = Trout Stocking – Maintenance of stocked trout from February 15 to July 31 and maintenance and propagation of fish species and additional flora and fauna which are indigenous to a warm water habitat.

[b] Streams with no perceptible flow at the time of crossing would be crossed using an open cut crossing method. Dry crossings (dam and pump or flume crossings) would be used for streams with perceptible flow at the time of crossing, unless otherwise authorized by applicable regulatory agencies, with the exception of the Lackawaxen River, which would be crossed using a cofferdam.

TABLE 2

Wetlands Crossed by the Project

Wetland ID	Beginning Milepost	Ending Milepost	Centerline Crossing Length (feet)	Wetland Type [a]	Temporary Construction Workspace Impact (acres) [b,c]	Permanent Impact (acres): New and Existing Permanent Right-of-Way for Project Operations (acres)	Permanent Impact (acres): 10-Foot Mowed and 30-Foot Maintained Area Within Right-of-Way (acres) [d]	Total Construction Workspace Impacts (acres)
PIPELINE (LOOP 322 and LOOP 323)								
W1a	0.13	0.15	146	PEM	0.04	0.13	0	0.18
L3 W003	0.24	0.25	13	PEM	0.01	0.02	0	0.03
W6a	0.40	0.41	25	PEM	0.01	0.03	0	0.04
L3 W005	0.48	0.50	28	PEM	0	0.03	0	0.03
W5a	0.55	0.59	(27/15/115) 157	PEM/PSS/ PFO	(0.07/0/0.018) 0.09	(0.05/0.05/0.09) 0.19	(0/0.04/0.06) 0.10	(0.12/0.052/0.11) 0.27
L3 W007	0.63	0.65	0	PSS	0.07	0.02	0	0.09
W3a	1.23	1.31	(105/0/139) 244	PEM/PSS/ PFO	(0.20/0.02/0) 0.22	(0.20/0.03/0.10) 0.33	(0/0.03/0.08) 0.11	(0.40/0.05/0.10) 0.55
W9a	1.35	1.42	(0/0/129) 129	PEM/PSS/ PFO	(0.08/0.09/0.03) 0.196	(0.07/0.04/0.10) 0.21	(0/0.04/0.07) 0.11	(0.14/0.13/0.13) 0.40
W10a	1.49	1.62	(457/0/2015) 672	PEM/PSS/ PFO	(0.17/0.03/0.07) 0.264	(0.47/0.05/0.22) 0.75	(0/0.05/0.13) 0.18	(0.64/0.08/0.29) 1.01
W11a	1.90	1.96	(0/0/316) 316	PEM/PSS/ PFO	(0.04/0.03/0.10) 0.16	(0.04/0.07/0.26) 0.36	(0/0.07/0.18) 0.25	(0.08/0.10/0.35) 0.53
W16a	2.26	2.38	(322/0/169) 491	PEM/PSS/ PFO	(0.15/0.03/0.00) 0.19	(0.32/0.04/0.16) 0.53	(0/0.04/0.11) 0.16	(0.47/0.08/0.17) 0.71
W15a	2.45	2.50	(0/0/253) 253	PEM/PSS/ PFO	(0.06/0.03/0) 0.09	(0.03/0.05/0.18) 0.257	(0/0.05/0.14) 0.19	(0.09/0.08/0.18) 0.34
L3 W020	2.56	2.57	(0/0/67) 67	PEM/PSS/ PFO	(0.01/0.00/0.01) 0.02	(0.01/0.01/0.05) 0.07	(0/0.01/0.04) 0.05	(0.02/0.01/0.05) 0.09
W14a	3.15	3.28	(26/0/398) 424	PEM/PSS/ PFO	(0.19/0/0) 0.19	(0.09/0.13/0.29) 0.52	(0/0.13/0.23) 0.37	(0.28/0.13/0.29) 0.70
W12a	3.39	3.47	(0/8/421) 429	PEM/PSS/ PFO	(0.09/0.16/0.00) 0.25	(0.05/0.10/0.35) 0.49	(0/0.10/0.24) 0.34	(0.13/0.27/0.35) 0.75

TABLE 2

Wetlands Crossed by the Project (cont'd)

Wetland ID	Beginning Milepost	Ending Milepost	Centerline Crossing Length (feet)	Wetland Type [a]	Temporary Construction Workspace Impact (acres) [b,c]	Permanent Impact (acres): New and Existing Permanent Right-of-Way for Project Operations (acres)	Permanent Impact (acres): 10-Foot Mowed and 30-Foot Maintained Area Within Right-of-Way (acres) [d]	Total Construction Workspace Impacts (acres)
PIPELINE (LOOP 322 and LOOP 323)								
W21a	3.47	3.51	(0/88/94) 182	PEM/PSS/ PFO	(0.04/0/0) 0.04	(0.03/0.10/0.07) 0.21	(0/0.07/0.05) 0.12	(0.08/0.10/0.07) 0.25
W20a	3.62	4.03	(256/0/1293) 1549	PEM/PSS/ PFO	(0.60/0.09/0.367) 1.057	(0.45/0.29/1.04) 1.78	(0/0.29/0.73) 1.03	(1.05/0.38/1.41) 2.84
W19a	4.30	4.43	(122/0/278) 400	PEM/PSS/ PFO	(0.13/0/0.04) 0.18	(0.18/0.04/0.21) 0.43	(0/0.04/0.16) 0.20	(0.31/0.04/0.26) 0.607
W24a	4.54	4.59	(91/0/141) 232	PEM/PSS/ PFO	(0.10/0/0.05) 0.16	(0.13/0.01/0.12) 0.26	(0/0.01/0.08) 0.10	(0.23/0.01/0.18) 0.419
W23a	4.63	4.73	(86/0/81) 167	PEM/PSS/ PFO	(0.11/0/0) 0.11	(0.18/0.00/0.06) 0.24	(0/0.00/0.05) 0.05	(0.29/0.00/0.06) 0.346
W22a	5.00	5.03	143	PEM	0.02	0.11	0	0.14
L3 W033	5.17	5.21	0	PEM	0.04	0.01	0	0.05
L3 W034	5.25	5.33	0	PEM	0.09	0.02	0	0.10
W3b	5.45	5.47	16	PEM	0.02	0.02	0	0.04
W4b	5.85	5.89	(153/0/16) 169	PEM/PSS/ PFO	(0.09/0/0) 0.09	(0.18/0.00/0.01) 0.20	(0/0.00/0.0010) 0.01	(0.27/0.00/0.010) 0.29
W5b	5.90	5.92	0	PEM	0.01	0.00	0	0.02
W6b	6.00	6.04	0	PEM/PSS	(0.03/0.03) 0.06	(0.07/0.01) 0.07	(0/0.01) 0.01	(0.10/0.03) 0.13
W7b	6.06	6.16	(141/0/140) 281	PEM/PSS/ PFO	(0.11/0.04/0) 0.15	(0.18/0.06/0.10) 0.34	(0/0.06/0.08) 0.14	(0.29/0.10/0.10) 0.49
W10b	6.20	6.24	(0/0) 0	PEM/PSS	(0.02/0.02) 0.04	(0.03/0) 0.03	0	(0.05/0.02) 0.07
L3 W043	6.24	6.28	(0/0) 0	PEM/PSS	(0.03/0.07) 0.100	(0.01/0) 0.01	0	(0.04/0.07) 0.11
L3 W044	6.29	6.32	6	PEM	0.04	0.02	0	0.06
L3 W045	6.31	6.32	0	PEM	0.01	0	0	0.01

TABLE 2

Wetlands Crossed by the Project (cont'd)

Wetland ID	Beginning Milepost	Ending Milepost	Centerline Crossing Length (feet)	Wetland Type [a]	Temporary Construction Workspace Impact (acres) [b,c]	Permanent Impact (acres): New and Existing Permanent Right-of-Way for Project Operations (acres)	Permanent Impact (acres): 10-Foot Mowed and 30-Foot Maintained Area Within Right-of-Way (acres) [d]	Total Construction Workspace Impacts (acres)
PIPELINE (LOOP 322 and LOOP 323)								
W11b	6.34	6.49	(46/485/177) 708	PEM/PSS/ PFO	(0.14/0.37/0.10) 0.608	(0.08/0.54/0.19) 0.82	(0/0.19/0.17) 0.36	(0.22/0.91/0.30) 1.43
W11b	6.54	6.71	(0/426/63) 489	PEM/PSS/ PFO	(0.03/0.42/0.02) 0.48	(0/0.54/0.05) 0.59	(0/0.10/0.04) 0.13	(0.03/0.96/0.07) 1.06
W20b	6.92	6.95	120	PFO	0.029	0.084	0.062	0.113
W19b	7.00	7.24	(0/564) 564	PSS/PFO	(0/0.31) 0.31	(0.07/0.56) 0.65	(0/0.39) 0.39	(0.07/0.89) 0.96
W17b	7.62	7.68	(33/159) 192	PEM/PSS	(0.02/0.09) 0.11	(0.04/0.18) 0.22	(0/0.04) 0.04	(0.05/0.27) 0.33
W16b	7.76	7.82	(0/186) 186	PSS/PFO	(0.05/0.06) 0.11	(0.03/0.19) 0.22	(0/0.13) 0.13	(0.08/0.25) 0.33
W15b	7.82	7.89	(97/18) 115	PSS/PFO	(0.06/0.02) 0.08	(0.12/0.02) 0.14	(0.02/0.01) 0.04	(0.18/0.04) 0.22
W14b	7.95	8.00	0	PSS	0.01	0	0	0.01
W12b	8.03	8.06	47	PFO	0.03	0.04	0.03	0.06
W13b	8.05	8.06	33	PEM	0.02	0.04	0	0.06
W24b	8.27	8.31	(186/0/35) 221	PEM/PSS/ PFO	(0.03/0.01/0.08) 0.13	(0.13/0/0.12) 0.26	(0/0/0.088) 0.088	(0.164/0.011/0.205) 0.38
W29b	8.33	8.58	522	PEM	0.09	0.60	0	0.69
W28b	8.94	9.01	(166/0) 166	PEM/PFO	(0.09/0.04) 0.14	(0.22/0.00) 0.22	0	(0.31/0.05) 0.36
W25b	9.25	9.27	13	PEM	0.04	0.04	0	0.08
W26b	9.27	9.39	18	PEM	0.02	0.02	0	0.04
W37a	9.51	9.52	33	PEM	0.01	0.03	0	0.04
W38a	9.55	9.64	(107/0/116) 223	PEM/PSS/ PFO	(0.07/0.02/0.03) 0.12	(0.15/0.03/0.08) 0.26	(0/0.03/0.07) 0.10	(0.22/0.05/0.11) 0.38

TABLE 2

Wetlands Crossed by the Project (cont'd)

Wetland ID	Beginning Milepost	Ending Milepost	Centerline Crossing Length (feet)	Wetland Type [a]	Temporary Construction Workspace Impact (acres) [b,c]	Permanent Impact (acres): New and Existing Permanent Right-of-Way for Project Operations (acres)	Permanent Impact (acres): 10-Foot Mowed and 30-Foot Maintained Area Within Right-of-Way (acres) [d]	Total Construction Workspace Impacts (acres)
PIPELINE (LOOP 322 and LOOP 323)								
W39a	10.38	10.39	16	PEM	0.02	0.02	0	0.04
W004a	10.43	10.45	4	PEM	0.10	0.02	0	0.12
W26a	10.58	10.59	(1/0/19)	PEM/PSS/	(0.00/0.00/0.01)	(0.00/0.00/0.02)	(0/0.00/0.01)	(0.01/0.01/0.02)
			20	PFO	0.01	0.02	0.02	0.03
W27a	10.60	10.65	(43/0/33)	PEM/PSS/	(0.01/0.00/0.01)	(0.04/0.01/0.03)	(0/0.01/0.02)	(0.06/0.01/0.04)
			76	PFO	0.03	0.08	0.03	0.11
W28a	10.78	10.80	7	PEM	0.02	0.01	0	0.03
W29a	11.66	11.73	0	PFO	0.003	0.005	0.001	0.008
W30a	11.91	11.93	(51/0)	PEM/PFO	(0.03/0.02)	(0.05/0.01)	(0/0.00) 0.00	(0.08/0.04)
			51		0.05	0.06		0.11
W31a	12.04	12.07	0	PEM	0	0.02	0	0.02
W32a	12.45	12.52	(174/0/14)	PEM/PSS/	(0.066/0.007/0)	(0.21/0.01/0.01)	(0/0.01/0.01) 0.02	(0.28/0.01/0.01)
			188	PFO	0.07	0.23		0.31
W33a	12.81	12.83	0	PEM	0	0.017	0	0.02
Pipeline Totals[d]					**6.64**	**12.37**	**4.92**	**19.01**
PEM:					**3.44**	**4.88**	**0.000**	**8.31**
PSS:					**1.74**	**2.65**	**1.45**	**4.40**
PFO:					**1.46**	**4.84**	**3.48**	**6.30**
PIPE YARDS								
1c	Pipe Yard No. 1		N/A	PEM	0.01	0	0	0.01
4c	Pipe Yard No. 1		N/A	PEM	0.00	0	0	0.00
5c	Pipe Yard No. 1		N/A	PEM	0.01	0	0	0.01
POTENTIAL HYDROSTATIC TEST WATER WITHDRAWAL SITES								
W1x	Corilla Lake		N/A	PSS	0.04	0	0	0.04

TABLE 2

Wetlands Crossed by the Project (cont'd)

Wetland ID	Beginning Milepost	Ending Milepost	Centerline Crossing Length (feet)	Wetland Type [a]	Temporary Construction Workspace Impact (acres) [b,c]	Permanent Impact (acres): New and Existing Permanent Right-of-Way for Project Operations (acres)	Permanent Impact (acres): 10-Foot Mowed and 30-Foot Maintained Area Within Right-of-Way (acres) [d]	Total Construction Workspace Impacts (acres)
ACCESS ROADS								
W11b	TAR 8		N/A	PSS	0.05	0	0	0.05
PROJECT TOTALS: [g]					**6.76**	**12.37**	**4.92**	**19.13**
PEM:					**3.47**	**4.88**	**0**	**8.34**
PSS:					**1.84**	**2.65**	**1.45**	**4.49**
PFO:					**1.46**	**4.84**	**3.48**	**6.30**

N/A = not applicable, PEM = palustrine emergent, PSS = palustrine scrub-shrub, PFO = palustrine forested; TAR = Temporary Access Road

[a] Wetland type based on field survey determination.

[b] Consists of wetlands within the 25-foot-wide temporary construction right-of-way.

[c] Acreage from ATWS included.

[d] Vegetation maintenance along the permanent right-of-way in wetlands would be restricted to a 10-foot-wide corridor centered on the loops to be maintained in a herbaceous state. In addition, trees within 15 feet of the Loops that are greater than 15 feet in height may be selectively cut. Therefore, this column represents the acreage of PFO wetland within a 30-foot-wide corridor that would be permanently converted to PEM or PSS wetland, and acreage of PSS wetland in a 10-foot-wide corridor that would be maintained in an herbaceous state/PEM wetland.

[e] Wetland crossings that would require the use of ATWS within 50 feet of the wetland boundary. Refer to Table A.5-2 for further explanation.

[f] Although the right-of-way width has been reduced to 75 feet in these wetlands, there is an ATWS of 10 feet through them bringing the total construction workspace to 85 feet to allow for topsoil segregation of saturated soils. Refer to Table A.5-2 for further explanation.

[g] Wetland impact acreage for each wetland has been rounded to the nearest hundredth, resulting in slight variation between the sum of the figures listed in the table and the Project Total presented. Project Total presented is based on total acres calculated using Geographical Information System (GIS) spatial analysis, taken out to additional decimal places for each wetland, and then the grand total rounded (i.e., rounding occurred only once, at end).

TABLE 3

Fisheries Resources of Special Concern Within the Project Area

Milepost	Waterbody Name	Width of Crossing (feet)	Crossing Method [a, b]	In-Stream Work Window	Comments
PIPELINE (LOOP 322 and LOOP 323)					
0.17	UNT to Indian Orchard Brook	10	Dry	January 1 through September 30, if designated [c]	HQ-CWF
0.24	UNT to Indian Orchard Brook	5	Dry	January 1 through September 30, if designated	HQ-CWF
1.93	UNT to Swamp Brook	4	Dry	June 16 through February 28	HQ-CWF
2.26	UNT to Swamp Brook	4	Dry	June 16 to February 28	Drains to HQ-CWF
2.37	Swamp Brook	20	Dry	June 16 through February 28	HQ-CWF
3.65	UNT to Rattlesnake Creek	3	Dry	No in-stream construction restriction	Drains to HQ-CWF
4.32	UNT to Rattlesnake Creek	2	Temporary Road Crossing Only	No in-stream construction restriction	Drains to HQ-CWF
4.37	UNT to Rattlesnake Creek	2	Dry	No in-stream construction restriction	Drains to HQ-CWF
4.56	Tinkwig Creek	6	Dry	January 1 through September 30, if designated	HQ-CWF
6.43	UNT to West Falls Creek	10	Open Cut	January 1 through September 30, if designated	Drains to HQ-CWF
6.94	UNT to West Falls Creek	1	Dry	January 1 through September 30, if designated	Drains to HQ-CWF
7.66	UNT to West Falls Creek	15	Dry	January 1 through September 30, if designated	HQ-CWF
7.84	UNT to West Falls Creek	1	Dry	January 1 through September 30, if designated	Drains to HQ-CWF
8.04	UNT to West Falls Creek	12	Dry	January 1 through September 30, if designated	HQ-CWF
8.06	UNT to West Falls Creek	2	Dry	January 1 through September 30, if designated	Drains to HQ-CWF
8.28	UNT to West Falls Creek	8	Dry	January 1 through September 30, if designated	Drains to HQ-CWF
9.26	UNT to Westcolang Creek	3	Dry	No in-stream construction restriction	Drains to HQ-CWF
9.27	UNT to Westcolang Creek	3	Dry	No in-stream construction restriction	Drains to HQ-CWF
9.28	UNT to Westcolang Creek	3	Temporary Road Crossing Only	No In-stream construction restriction	Drains to HQ-CWF
9.59	UNT to O'Donnell Creek	3	Temporary Road Crossing Only	June 16 through February 28	Drains to HQ-CWF
10.40	O'Donnell Creek	4	Temporary Road Crossing Only	June 16 through February 28	HQ-CWF
10.40	UNT to Lackawaxen River	2	Avoided	June 16 through February 28	Drains to HQ-TSF
10.41	Lackawaxen River	250	Cofferdam (Dry) / Open Cut (Contingency)	June 16 through February 28	HQ-TSF
10.59	UNT to Lackawaxen River	1	Dry	June 16 through February 28	Drains to HQ-TSF
11.66	UNT to Lords Creek	1	Dry	June 16 through February 28	Drains to HQ-CWF
12.51	Lords Creek	6	Dry	June 16 through February 28	HQ-CWF

TABLE 3

Fisheries Resources of Special Concern Within the Project Area

Milepost	Waterbody Name	Width of Crossing (feet)	Crossing Method [a, b]	In-Stream Work Window	Comments
TEMPORARY ACCESS ROADS (TAR)					
TAR 6					
NA	UNT to Rattlesnake Creek	55	Existing Culvert	No in-stream construction restriction	Drains to HQ-CWF
TAR 7					
NA	UNT to Tinkwig Creek	4	Dry	January 1 through September 30, if designated	Drains to HQ-CWF
TAR 8					
NA	UNT to West Falls Creek	6	Dry	January 1 through September 30, if designated	Drains to HQ-CWF
NA	UNT to West Falls Creek	20	Temporary Culvert/Gravel Installation	January 1 through September 30, if designated	Drains to HQ-CWF

[a] Streams with no perceptible flow at the time of crossing would be crossed using an open cut crossing method. Dry crossings (dam and pump or flume crossings) would be used for streams with perceptible flow at the time of crossing unless otherwise authorized by applicable regulatory agencies.

[b] Proposed Crossing Methods:

Open Cut – In stream excavation allowing continuous flow through work zone. Only proposed for streams larger than 25 feet wide where dry crossing and HDD/bore methods are not feasible. Also proposed for open water crossings.

Dry – Streams with perceptible flow would be crossed using a dam and flume or dam and pump method, enabling bypass of flow through or around a relatively dry work zone during construction. Any stream with no perceptible flow at the time of construction would be open cut. Larger streams may provide option to use a cofferdam or porta dam dry-ditch crossing method.

[c] Streams are currently undergoing review by the PAFBC for Wild Trout Designations: if designations are applied, the in-stream work windows would be applied as indicated.

TABLE 4

Additional Temporary Workspaces, Staging Areas, Pipe Yards, and Water Withdrawal Locations Associated with the Project

County	Township	Nearest Milepost	Area Affected (acres) [a]	Existing Land Use	Justification [b]
Wayne	Berlin	0.00	0.1	Agriculture	A
Wayne	Berlin	0.00	0.1	Agriculture	A
Wayne	Berlin	0.00	1.0	Open	Pe
Wayne	Berlin	0.12	0.1	Open	R/Wa/We/SS/A
Wayne	Berlin	0.13	0.1	Open	R/Wa/We/SS/A
Wayne	Berlin	0.20	0.4	Open	R/Wa/We/SS/A
Wayne	Berlin	0.20	0.4	Open	R/Wa
Wayne	Berlin	0.30	0.6	Open	Pc
Wayne	Berlin	0.30	0.8	Open	Pc
Wayne	Berlin	0.54	0.1	Open	Wa/We
Wayne	Berlin	1.20	0.2	Open	We
Wayne	Berlin	1.32	0.2	Open	R
Wayne	Berlin	1.33	0.1	Open	R
Wayne	Berlin	1.46	0.2	Open	We
Wayne	Berlin	1.63	0.2	Agriculture	We
Wayne	Berlin	1.88	0.2	Open	We
Wayne	Berlin	2.01	0.2	Open	We
Wayne	Berlin	2.20	0.2	Open	R
Wayne	Berlin	2.21	0.3	Open	R/Wa/We
Wayne	Berlin	2.43	0.1	Open/Forest	Wa/We
Wayne	Berlin	2.55	0.3	Open	Wa/We
Wayne	Berlin	3.14	0.1	Open/Forest	We
Wayne	Palmyra	3.29	0.2	Open	We
Wayne	Palmyra	3.36	0.2	Open/Forest	We
Wayne	Palmyra	3.56	0.3	Forest	R/We
Wayne	Palmyra	3.61	0.6	Open/Forest	We
Wayne	Palmyra	3.77	0.6	Open	We
Wayne	Palmyra	3.81	0.6	Agriculture	We
Wayne	Palmyra	4.24	0.4	Open/Forest	Pc/We
Pike	Lackawaxen	4.30	0.1	Open/Forest	Wa/We
Pike	Lackawaxen	4.40	0.1	Open/Forest	H
Pike	Lackawaxen	4.45	0.1	Open	We
Pike	Lackawaxen	4.60	0.1	Open	Wa/We
Pike	Lackawaxen	4.75	0.1	Open	We
Pike	Lackawaxen	4.99	0.1	Open	We
Pike	Lackawaxen	5.06	0.1	Open	We
Pike	Lackawaxen	5.43	0.1	Open	We
Pike	Lackawaxen	5.47	0.1	Open	We
Pike	Lackawaxen	5.80	0.2	Open	We
Pike	Lackawaxen	5.97	0.2	Open	We
Pike	Lackawaxen	6.19	0.2	Open	We
Pike	Lackawaxen	6.50	1.3	Open	We
Pike	Lackawaxen	6.68	0.2	Forest	R
Pike	Lackawaxen	6.73	0.4	Open	R/We
Pike	Lackawaxen	6.95	0.3	Open	Wa/We
Pike	Lackawaxen	7.12	0.1	Open	Wa/We
Pike	Lackawaxen	7.59	0.1	Open	R/Wa/We
Pike	Lackawaxen	7.60	0.2	Forest	R/Wa/We
Pike	Lackawaxen	7.69	0.2	Forest	We
Pike	Lackawaxen	7.82	0.1	Forest	We
Pike	Lackawaxen	8.02	0.1	Open	R/Wa/We

TABLE 4

Additional Temporary Workspaces, Staging Areas, Pipe Yards, and Water Withdrawal Locations Associated with the Project

County	Township	Nearest Milepost	Area Affected (acres) [a]	Existing Land Use	Justification [b]
Pike	Lackawaxen	8.08	0.5	Open	R/Wa/We
Pike	Lackawaxen	8.20	6.3	Industrial/Forest/Open	Compressor Station 323
Pike	Lackawaxen	8.35	0.2	Open	Pc/We
Pike	Lackawaxen	8.52	0.1	Forest	We
Pike	Lackawaxen	8.92	0.1	Open	We
Pike	Lackawaxen	9.00	0.1	Forest/Open	We
Pike	Lackawaxen	9.03	0.2	Open	R
Pike	Lackawaxen	9.08	0.3	Open	R
Pike	Lackawaxen	9.20	0.5	Open/Forest	Pc
Pike	Lackawaxen	9.41	0.1	Open	Pc
Pike	Lackawaxen	9.49	0.3	Open	Pc
Pike	Lackawaxen	9.67	0.3	Open	Wa/We
Pike	Lackawaxen	10.33	0.3	Open	Pc/We
Pike	Lackawaxen	10.40	0.9	Open	Pc/We/Wa
Pike	Lackawaxen	10.43	1.6	Open	D
Pike	Lackawaxen	10.56	0.2	Open	We/Wa/RR
Pike	Lackawaxen	10.69	0.1	Open	We
Pike	Lackawaxen	10.75	0.1	Open	We
Pike	Lackawaxen	10.82	0.1	Open	We
Pike	Lackawaxen	11.30	0.3	Open	Pc
Pike	Lackawaxen	11.33	0.3	Open/Forest	Pc
Pike	Lackawaxen	12.02	0.1	Open/Forest	We
Pike	Lackawaxen	12.37	0.2	Open/Forest	Pc/We
Pike	Lackawaxen	12.41	0.2	Open/Forest	Pc/We
Pike	Lackawaxen	12.52	0.2	Open/Forest	H
Pike	Lackawaxen	12.67	0.2	Open	Pc
Pike	Lackawaxen	12.80	0.3	Open	Pc
Pike	Lackawaxen	12.88	0.1	Forest	R
Pike	Lackawaxen	12.88	0.1	Forest	R
Pike	Lackawaxen	12.90	0.3	Forest	R/Pe/Tie-in
Pike	Lackawaxen	12.91	0.1	Forest	R/Pe/Tie-in
Subtotal, ATWS			**27.7**		
Wayne	Berlin	N/A	13.3	Open	PY
Wayne	Berlin	N/A	22.3	Agricultural	PY
Wayne	Palmyra/ Texas	N/A	15.4	Agricultural	PY
Wayne	Berlin	0.00	2.8	Agricultural	ST
Wayne	Berlin	0.60	4.2	Open	ST
Pike	Lackawaxen	N/A	1.5	Open	ST
Wayne	Berlin	N/A	0.8	Open	H
Wayne	Berlin	N/A	0.7	Commercial/Industrial	H
Pike	Lackawaxen	N/A	0.2	Forest	H
Pike	Lackawaxen	N/A	<0.1	Developed	H
Subtotal, Staging Areas, Pipe Yards, and Hydrostatic Test Water Locations			**61.0**		
TOTAL			**88.7**		

[a] Dimensions are approximate. Totals may not match due to rounding.

[b] Justifications for the use of ATWS include: A = Access road; D = Dewatering area for river crossing; H = Hydrostatic test section or withdrawal location; Pc = Pipeline crossing; Pe = Pipeline start/endpoint; PY = Pipe yard; R = roadway crossing; RR = Railroad; SS = spoil storage; ST = Staging Area (Contractor Yard); Wa = waterbody crossing; We = wetland crossing.

TABLE 5

Existing and Future Projects Identified in the Project Area

Project Name	Location	Nearest Facility Location (Distance to Project)	Project Description	Status	Date of Construction Activities
FERC JURISDICTIONAL PROJECTS [a]					
300 Line Project, TGP Docket No. CP09-444-000	Potter, Tioga, Bradford, Susquehanna, Wayne, Pike, Venango, and McKean, PA and Sussex and Passaic, NJ	Loop 322 (0.0 miles)	Constructed eight 30-inch-diameter loops on TGP's 300 Line, constructed two new compressor stations, and modified seven existing compressor stations.	Past	Placed in service October 2011
Northeast Upgrade Project, TGP Docket No. CP11-161-000	Bradford, Susquehanna, Wayne, and Pike, PA, and Sussex, Passaic, and Bergen, NJ	Loop 322 (0.0 miles)	Constructed five 30-inch-diameter loops on TGP's 300 Line and modified four existing compressor stations.	Past	Placed in service November 2011
Susquehanna West Project, TGP Docket No. CP15-148-000	Tioga and Bradford, PA	Loop 322 (53.2 miles)	Approximately 8.1 miles of new 36-inch-diameter pipeline loop along TGP's existing 300 Line. Piping modifications and cooling system upgrades associated with the pipeline loop would be completed at Compressor Station 315. Increase compression capacity and modify piping and other equipment at existing Compressor Station 317 and Compressor Station 319.	Future	Construction is expected to begin as early as November 2016. Anticipated in-service date November 2017
Triad Expansion Project, TGP Docket No. CP15-520-000	Susquehanna, PA	Loop 322 (23.2 miles)	Approximately 7.0 miles of new 36-inch-diameter pipeline loop along TGP's existing 300 Line and appurtenant and auxiliary facilities consisting of crossover and connecting facilities to the existing TGP 300-1 and 300-2 Lines, a new pig launcher, pig receiver and an additional odorant facility at Compressor Station 321.	Future	Anticipated in-service date November 2017
FERC JURISDICTIONAL PROJECTS [a]					
TGP's Northeast Supply Diversification (NSD) Project, Docket No. CP11-30-000	Tioga and Bradford Counties, PA	CS 315 and CS 317 (0.0 miles)	Construction of 6.77 miles of pipeline looping between CS 315 and CS 317 and pig receiver at CS 317	Approved	Placed in service November 1, 2012
TGP's and National Fuel Gas Supply Corporation's Northeast ConneXion NY/NJ Project CP-05-355	Potter, Bradford, and Susquehanna, Counties, PA; and Bergen and Sussex Counties, NJ	CS 317 (0.0 miles)	Construct approximately 6 miles of new pipeline loops on TGP's 300-Line, additional compression at CS 313, upgrades at CS 317, upgrades at Ramsey Meter Station, and additional incremental capacity at CS 325,	Approved	In-service date was November 2006

TABLE 5

Existing and Future Projects Identified in the Project Area

Project Name	Location	Nearest Facility Location (Distance to Project)	Project Description	Status	Date of Construction Activities
MPP Project	Potter, Mercer, Venangno, McKean Counties PA	Loop 322 (138 miles)	The MPP Project included construction of 7.9 miles of 30-inch-diameter looping pipeline in Potter County, Pennsylvania (Loop 313) and a new pig launcher and miscellaneous aboveground facilities at Compressor Station 313. In addition, the MPP Project included modifications at four existing compressor stations in Pennsylvania	Approved	In-service date was November 2013
TGP MINOR PIPELINE-RELATED PROJECTS					
Replace Unit 1A VFD Chiller Unit at Compressor Station 323	Pike, PA	Compressor Station 323 (0.0 miles)	Replacing existing obsolete chiller unit for Compressor Station 323.	Present	Start April 2015
300 System Class Change 32	Wayne, PA	Loop 322 (0.0 miles)	A class change (Class 1 to 3) for Line 300-1 within valve section 322-1, resulting in replacement of approximately 220 feet of 24-inch pipe, and installation of a new mainline block valve.	Future	In initial planning stages; timing yet-to-be determined by TGP
300-1 Cathodic Protection Modification Project	Pike, PA	Loop 323 (1.8 miles)	Recoat pipe, and install new rectifier, linear anode, and new cathodic protection system at multiple sites along Line 300-1.	Future	In initial planning stages; timing yet-to-be determined by TGP
COMMERCIAL/INDUSTRIAL/RESIDENTIAL/MUNICIPAL DEVELOPMENT					
Strasser Quarry, Lackawaxen-Honesdale Shippers Association	Wayne, PA	Loop 322 (1.8 miles)	Quarry operations in Palmyra Township, Wayne County affecting 15.3 acres on property owned by Lackawaxen-Honesdale Shippers Association.	Present	Not available
Trails End Camp Blasting	Wayne, PA	Loop 322 (2.9 miles)	Construction blasting for Trails End Camp in Berlin Township, Wayne County.	Past	March 2014
Wayne D. Holbert Quarry Expansion	Pike, PA	Loop 323 (1.5 miles)	Commencement, operation, and restoration of a quarry in Lackawaxen Township.	Past	Permit issued June 2013
PennDOT INFRASTRUCTURE / BRIDGE PROJECTS					
PennDOT Project No. 9329: Pond Eddy Crossing	Pike, PA	Loop 323 (9.4 miles)	Replacement of existing Pond Eddy Bridge	Future	Estimated completion date 12/31/18
PennDOT Project No. 96726: SR 1007 over Twin Lakes Creek	Pike, PA	Loop 323 (6.4 miles)	Bridge replacement on State Route 1007 (Woodtown Road) over Twin Lakes Creek, in Shohola Township, Pike County.	Future	Completed November 2015
PennDOT Project No. 57769: SR 590 Pipes Bridge Replacement	Pike, PA	Compressor Station 323 (1.1 miles)	Replacing existing pipes with culverts on State Route 590 east and west of the intersection with State Route 4003 (Welcome Lake Road) in Lackawaxen Township, Pike County.	Past	Completion date not available

TABLE 5

Existing and Future Projects Identified in the Project Area

Project Name	Location	Nearest Facility Location (Distance to Project)	Project Description	Status	Date of Construction Activities
PennDOT Project No. 89014: SR 1003 over Lackawaxen River	Pike, PA	Compressor Station 323 (0.8 miles)	Replacement/rehabilitation of State Route 1003 bridge (Rowland Road) over Lackawaxen River in Lackawaxen Township, Pike County.	Future	2016-2019
PennDOT Project No. 9833: Carley Brooks Bridge 2	Wayne, PA	Loop 322 (2.6 miles)	Bridge replacement/ rehabilitation on State Route 2008 over Carley Brook, in Honesdale Borough, Wayne County	Future	2018
PennDOT Project No. 96808: SR 1014 Slide Restoration	Pike, PA	Loop 323 (0.9 miles)	Slope repair on State Route 1014 (Masthope Road) in Lackawaxen Township, Pike County	Future	2016
Roebling's Bridge Project	Pike, PA and Sullivan, NY	Loop 323 (2.7 miles)	Bridge maintenance project in Pike County, PA and Sullivan County, NY	Future	Unknown
OTHER ENERGY/UTILITY PROJECTS					
Northeast-Pocono Reliability Project, PPL Electric Utilities	Wayne, PA	Loop 322 (1.7 miles)	Part of this project was rebuilding an existing 69-kilovolt electric utility line that runs from the Peckville area in Lackawanna County to Honesdale, Wayne County. The line is about 20 miles long. It is 85 years old and no longer adequate to serve customer needs. The existing wooden poles for this line, which are about 70 feet tall, were replaced with new steel poles that are about 95 feet tall. The right of way for this line is 100 feet wide.	Past	Completed April 2016
131 - Bohemia Tap 69 kV, 845 BIL Modernization Project, PPL Electric Utilities	Pike, PA	Loop 322 (0.0 miles)	Approximate 1.8 miles of modifications to existing overhead electrical power line.	Past	2013-2015
OIL AND GAS EXPLORATION AND PRODUCTION[c]					
Natural Gas Production Wells, Wayne County, PA	Wayne, PA	(4.4 miles)	There is one existing natural gas well (ROBSON 6275281, permit #127-20008 owned by Chesapeake Appalachia, LLC - 2009) within the HUC-12 watershed ROI. No additional natural gas production wells are known.	Past	Well plugged 7/16/2009
Natural Gas Production Wells, Pike County, PA	Pike, PA	(6.7 miles)	There is one existing natural gas well (PA DEPT OF FORESTS 7 WATERS, permit # C-1103-20003) owned by Texaco, Inc.) within the HUC-12 watershed ROI. Plugged well in 1971 – listed as dry hole. No additional natural gas production wells are known.	Past	Well plugged 12/15/1971

TABLE 5

Existing and Future Projects Identified in the Project Area

Project Name	Location	Nearest Facility Location (Distance to Project)	Project Description	Status	Date of Construction Activities

Note:

NA = not applicable

ROI = Region of Influence

[a] Projects recently completed, under construction, or expected to be under construction in the same timeframe as, and located within the ROI of the Orion Project, with the exception of TGP's Northeast Energy Direct, Susquehanna West and Triad Expansion Projects.

[b] Portions of the Orion Project parallel or cross 300 Line Project and Northeast Upgrade Project areas.

[c] Well drilling activity within the same counties (Wayne and Pike Counties) as the Orion Project.

APPENDIX C

SITE-SPECIFIC CONSTRUCTION PLANS FOR RESIDENCES WITHIN 25 FEET OF CONSTRUCTION

Sep 28, 2015 – 4:07PM

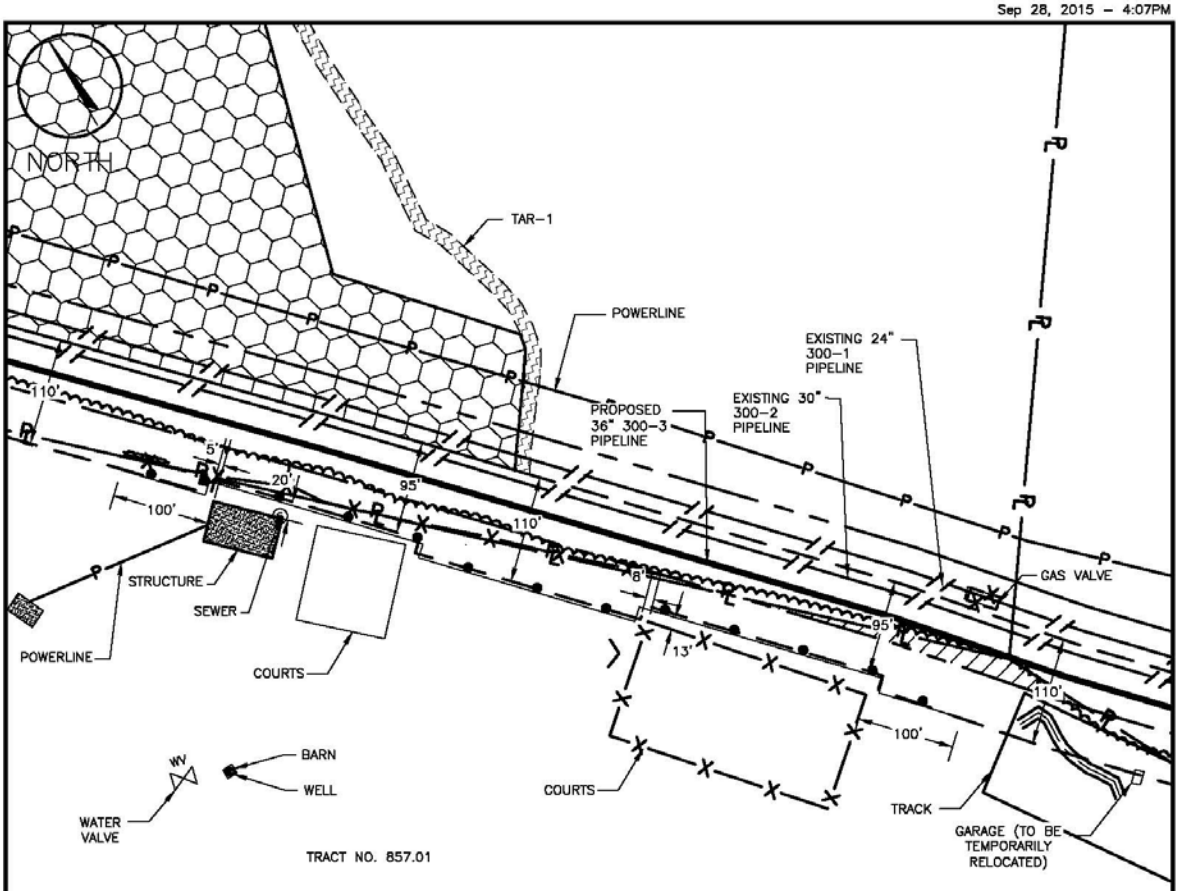

LEGEND

- EXISTING PIPELINE
- EXISTING TREE LINE
- PROPOSED PIPELINE
- EXISTING FENCE
- STRUCTURE
- PROPERTY LINE
- ORANGE SAFETY FENCE
- PROPOSED PERMANENT EASEMENT
- TEMPORARY WORKSPACE
- EXISTING PERMANENT EASEMENT
- PROPOSED CONTRACTOR YARD

GENERAL NOTES:

1. ORANGE SAFETY FENCE SHALL BE INSTALLED ALONG EDGE OF CONSTRUCTION WORK AREA ADJACENT TO THE STRUCTURE/RESIDENCE FOR A DISTANCE OF 100 FT ON EITHER SIDE.
2. LIGHTED BARRICADES WILL BE ERECTED AROUND EXCAVATION, WHICH MUST REMAIN OPEN AFTER WORK HOURS.
3. ACCESS TO STRUCTURES/RESIDENCES MUST BE MAINTAINED.
4. THE ROW WILL BE WATERED PERIODICALLY TO REDUCE FUGITIVE DUST EMISSIONS.
5. 2" X 4" DOG WIRE FENCE AND "T" POSTS WILL BE USED TO PROTECT PETS/CHILDREN AT YARDS WITH EXISTING SECURITY FENCE.
6. MATURE TREES AND LANDSCAPING SHALL NOT BE REMOVED WITHIN THE EDGE OF THE CONSTRUCTION WORK AREA UNLESS NECESSARY FOR THE SAFE OPERATION OF CONSTRUCTION.

REFERENCE DRAWINGS:
TO-T10-300-3-9

NO.	DATE	BY	DESCRIPTION	PROJ. ID	APPR.
0	10-09-15	KG(ENE)	ISSUED FOR FERC	202225	

REVISIONS

Division:		Op. Area:	
St.:	PENNSYLVANIA	Co./Par.:	WAYNE
Section: N/A	Township: N/A	Range: N/A	
Dft:RM(ENE)	Date: 06-01-2015	Project ID:	202225
Chk:KG(ENE)	Date: 07-29-2015	Scale:	1"=150'
Appr:DD(ENE)	Date: XX-XX-XXXX	Filename:	TA-L10-322-300-3-1.dwg

ORION PROJECT
36" PENNSYLVANIA LOOP 300-3
RESIDENTIAL CONSTRUCTION DETAIL
TRACT NO. 857.01
WAYNE COUNTY, PA

Tennessee Gas Pipeline Company, L.L.C.
a Kinder Morgan company

TA-L10-322-300-3-1 | Sheet: 1 of 1 | Type: | Rev. 0

Jun 13, 2016 – 1:07PM

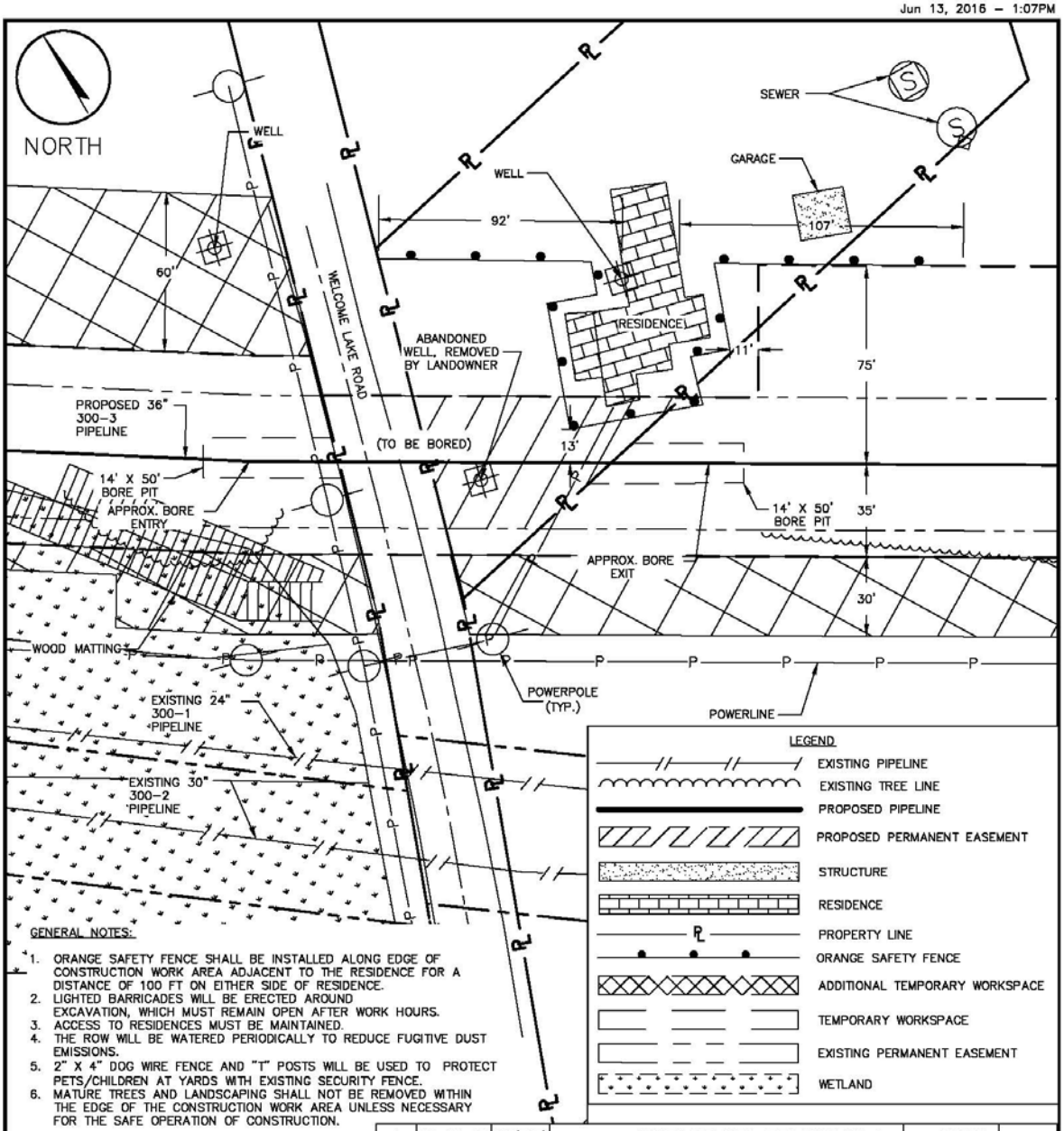

GENERAL NOTES:

1. ORANGE SAFETY FENCE SHALL BE INSTALLED ALONG EDGE OF CONSTRUCTION WORK AREA ADJACENT TO THE RESIDENCE FOR A DISTANCE OF 100 FT ON EITHER SIDE OF RESIDENCE.
2. LIGHTED BARRICADES WILL BE ERECTED AROUND EXCAVATION, WHICH MUST REMAIN OPEN AFTER WORK HOURS.
3. ACCESS TO RESIDENCES MUST BE MAINTAINED.
4. THE ROW WILL BE WATERED PERIODICALLY TO REDUCE FUGITIVE DUST EMISSIONS.
5. 2" X 4" DOG WIRE FENCE AND "T" POSTS WILL BE USED TO PROTECT PETS/CHILDREN AT YARDS WITH EXISTING SECURITY FENCE.
6. MATURE TREES AND LANDSCAPING SHALL NOT BE REMOVED WITHIN THE EDGE OF THE CONSTRUCTION WORK AREA UNLESS NECESSARY FOR THE SAFE OPERATION OF CONSTRUCTION.

REFERENCE DRAWINGS:
TO-T10-300-3-16

NO.	DATE	BY	DESCRIPTION	PROJ. ID	APPR.
1	06-13-16	MW(ENE)	ISSUED FOR SUPP. FERC FILING NO. 2	202225	
0	10-09-15	KG(ENE)	ISSUED FOR FERC	202225	

REVISIONS

Division:		Op. Area:	
St.: PENNSYLVANIA		Co./Par.: PIKE	
Section: N/A	Township: N/A	Range: N/A	
Dft:RM(ENE)	Date: 06-01-2015	Project ID: 202225	
Chk:JL(ENE)	Date: 06-30-2015	Scale: 1"=50'	
Appr:DD(ENE)	Date: 05-23-16	Filename: TA-L10-322-300-3-2.dwg	

ORION PROJECT
36" PENNSYLVANIA LOOP 300-3
RESIDENTIAL CONSTRUCTION DETAIL
TRACT NO. 883
PIKE COUNTY, PA

Tennessee Gas Pipeline Company, L.L.C.
a Kinder Morgan company

TA-L10-322-300-3-2 | Sheet: 1 of 1 | Type: | Rev. 1

Sep 28, 2015 – 3:53PM

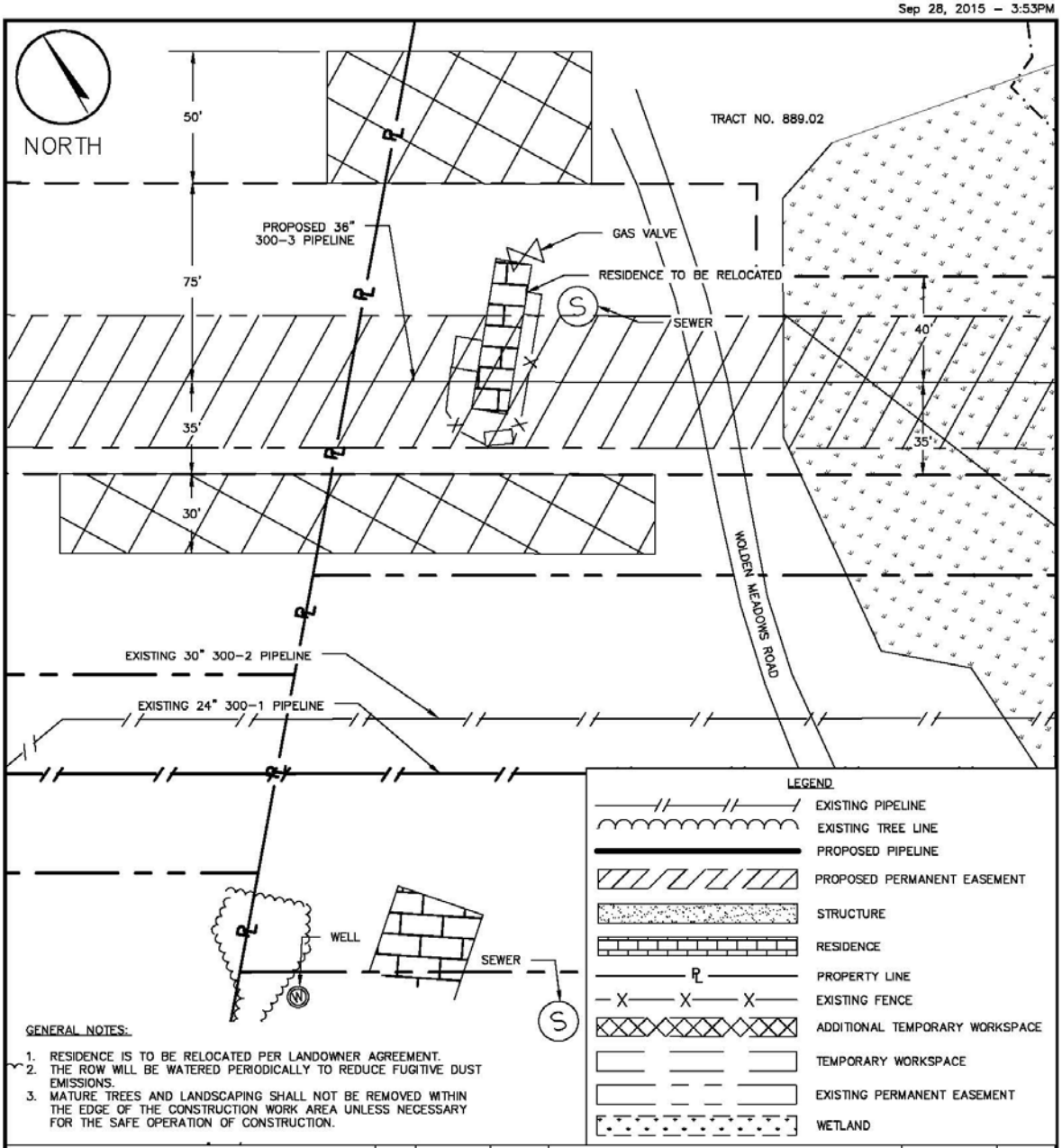

GENERAL NOTES:

1. RESIDENCE IS TO BE RELOCATED PER LANDOWNER AGREEMENT.
2. THE ROW WILL BE WATERED PERIODICALLY TO REDUCE FUGITIVE DUST EMISSIONS.
3. MATURE TREES AND LANDSCAPING SHALL NOT BE REMOVED WITHIN THE EDGE OF THE CONSTRUCTION WORK AREA UNLESS NECESSARY FOR THE SAFE OPERATION OF CONSTRUCTION.

REFERENCE DRAWINGS:
TO-T10-300-3-17

NO.	DATE	BY	DESCRIPTION	PROJ. ID	APPR.
0	10-09-15	KG(ENE)	ISSUED FOR FERC	202225	

REVISIONS

Division:		Op. Area:	
St.: PENNSYLVANIA		Co./Par.: PIKE	
Section: N/A	Township: N/A	Range: N/A	
Dft:RM(ENE)	Date: 06-01-2015	Project ID: 202225	
Chk:JL(ENE)	Date: 06-04-2015	Scale: 1"=50'	
Appr:DD(ENE)	Date: XX-XX-XXXX	Filename: TA-L10-322-300-3-3.dwg	

ORION PROJECT
36" PENNSYLVANIA LOOP 300-3
RESIDENTIAL CONSTRUCTION DETAIL
TRACT NO. 889.02
PIKE COUNTY, PA

Tennessee Gas Pipeline Company, L.L.C.
a Kinder Morgan company

TA-L10-322-300-3-3 | Sheet: 1 of 1 | Type: | Rev. 0

APPENDIX D

LIST OF PREPARERS

LIST OF PREPARERS

1. FEDERAL ENERGY REGULATORY COMMISSION

Rodgers, Keith – **Project Manager, Land Use, Geology, Soils, and Groundwater**
B.S., Geological Sciences with Geochemistry Option, 2004, Virginia Polytechnic Institute
M.E., Water Resources, 2008, University of Arizona

Allen, Christine – **Deputy Project Manager, Vegetation, Wildlife, Fisheries, Wetlands, and Surface Water**
B.S., Marine Biology, 2005, University of North Carolina, Wilmington

Boros, Laurie – **Cultural Resources**
B.A., Anthropology/Archaeology, 1980, Queens College, City University of New York

Kragie, S. Xiah – **Reliability and Safety, Air Quality, and Noise**
M.A., Geochemistry, 2013, Columbia University
M.P.H., Global Environmental Health, 2008, Emory University
B.S., Civil & Environmental Engineering, 2006, University of Maryland, College Park

2. ENVIRONMENTAL RESOURCES MANAGEMENT

Lowell, Fran – **Project Director**
M.A., Public Affairs (Energy, Environment, and Technology Policy), 1992, University of Minnesota, Twin Cities
B.A., Biology, 1976, Dowling College

Enright, Troy – **Project Manager, Quality Assurance Review, Introduction, Socioeconomics, Alternatives**
B.S., Environmental Science, 2003, University of Minnesota, Twin Cities

Sterner, Brian – **Deputy Project Manager**
B.S., Biology, 1988, Grove City College

Afon, Adeyinka – **Air Quality and Noise**
M.S.E., Environmental Process Engineering, 2004, Johns Hopkins University
B.S., Chemical Engineering, 2001, Ladoke Akintola University of Technology, Nigeria

Arrison, Julie – **Surface Water**
B.S., Ecology, 1994, University of Florida

Buckless, Mike – **Geology and Soils**
B.S., Environmental Science, 2013, University of Rhode Island

Fox, Jonathan – **Wetlands and Groundwater**
B.S., Environmental Design, 1997, Delaware Valley College of Science and Agriculture

Gozdor, Sara – **Reliability and Safety**
B.A., Environmental Studies, 2004, Adelphi University
A.A., Liberal Arts, 2000, Nassau Community College

Hempy-Mayer, Kara – **Technical Editor**
M.S., Botany and Plant Pathology, 2004, Oregon State University
B.S., Biology, 1998, University of Massachusetts

Lockard, Greg – **Cultural Resources**
Ph.D., Anthropology, 2005, University of New Mexico

Sussman, Benjamin – **Land Use**
M.C.R.P., City and Regional Planning, 2002, Georgia Institute of Technology
B.S., Science, Technology, and Society, 1998, Stanford University

Swain, Kelli – **Vegetation, Wildlife, and Fisheries**
M.S., Geography, 2010, University of Nevada, Reno
B.S., Marine Chemistry, 2008, Eckerd College

Young, Cameron – **Water Resources and Wetlands, Alternatives**
B.A., Biology, 1997, Earlham College

Environmental Resources Management is a third party contractor assisting the Commission staff in reviewing the environmental aspects of the project application and preparing the environmental documents required by NEPA. Third party contractors are selected by Commission staff and funded by project applicants. Per the procedures in 40 CFR 1506.5(c), third party contractors execute a disclosure statement specifying that they have no financial or other conflicting interest in the outcome of the project. The Commission staff solely directs the scope, content, quality, and schedule of the contractor's work. The Commission staff independently evaluates the results of the third-party contractor's work and the Commission, through its staff, bears ultimate responsibility for full compliance with the requirements of NEPA.