Pacific Northwest
NATIONAL LABORATORY
Proudly Operated by Battelle Since 1965

Adaptive Middleware for Real-Time Distributed Stream Processing

LIU, YAN

Fundamental & Computational Sciences Directorate

Richland, WA

*The legends **PROTECTED INFORMATION and PROPRIETARY INFORMATION** apply to information describing Subject Inventions as defined in Contract No. DE-AC05-76RL01830 and any other information which may be properly withheld from public disclosure thereunder.*

Models for Future Power Grid

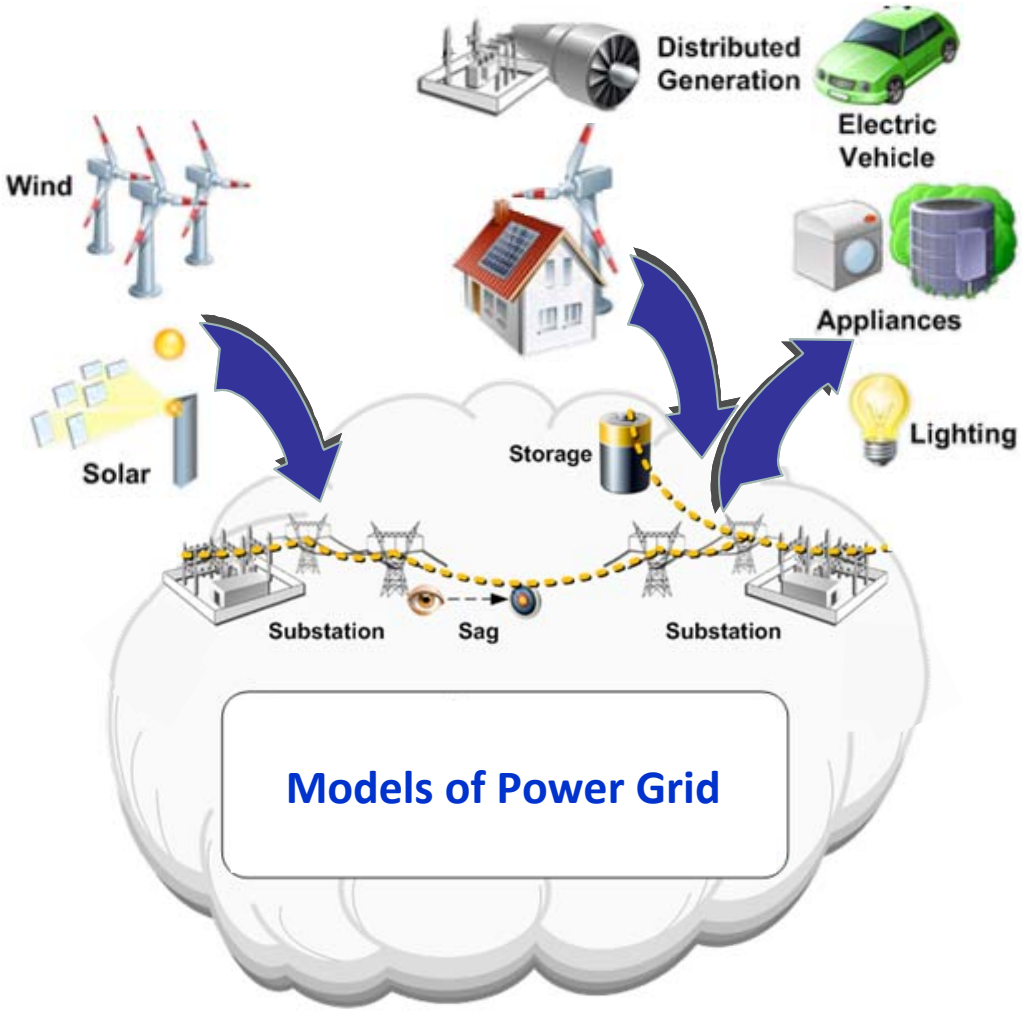

http://gridoptics.pnnl.gov/

- Large number of ***distributed*** generators, storage and demand response
- High penetration of ***variable renewable resources***

- Data availabilities
- Computation capabilities

- Real-time distributed stream processing
- High performance computing
- Adaptive to ***data quality*** and ***quantity***

Outline

- Motivation
  - HPC-enabled power models
  - Distributed computing in Power Grid
  - Data affect the distributed data communication
- Adaptive Middleware for Distributed State Estimation with PMUs
  - Middleware architecture
  - Adaptive behavior modeling
  - A testbed prototype
- Future Work

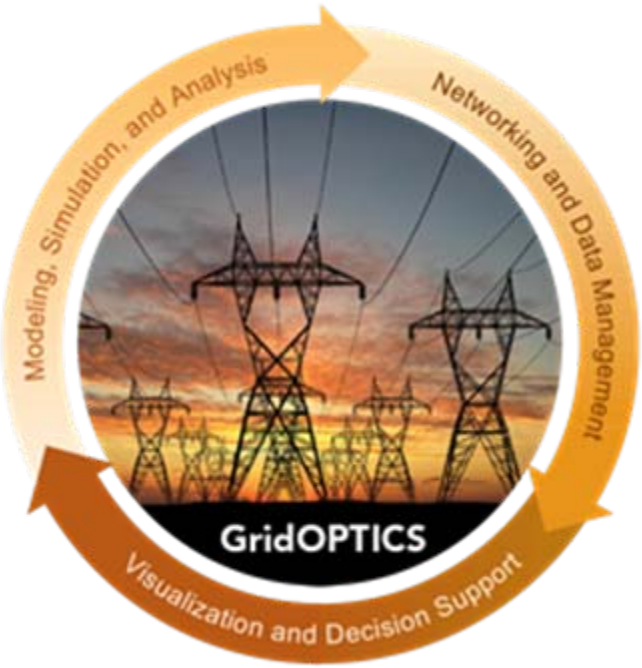

Integration with GridOPTICS™ – Grid Operation and Planning Technology Integrated Capabilities Suite

http://gridoptics.pnnl.gov/

Motivation: three application examples

- Parallel State Estimation: *estimate system states and generate critical input for many power system operational functions*
- Parallel Contingency Analysis
- Distributed System Architecture

Functional structure of today's power system operations

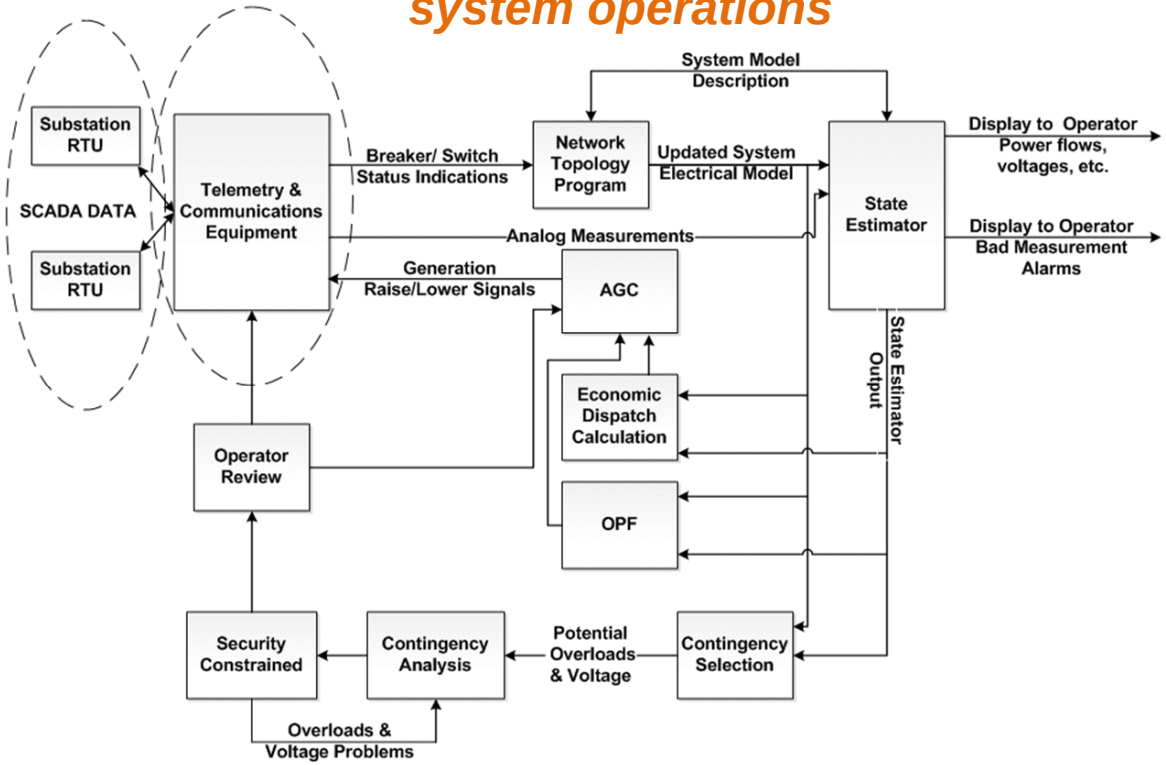

"Obviously, **the availability of this large amount of real-time data from each substation, time stamped at high sampling rates, warrants the rethinking of wide-area monitoring and control applications**." -- Quote from Prof Bose, IEEE Fellow, Smart Transmission Grid Applications and Their Supporting Infrastructure, IEEE Transaction on Smart Grid, Vol.1. No.1, June 2010

Motivation: three application examples

- Parallel State Estimation
- Parallel Contingency Analysis: *help determine the impact of potential equipment failures by considering "what-if" scenarios*

  10^6 ~ 10^8 cases, each with 100KB ~ 150MB data

  For WECC model, a 500-times speedup was achieved with 512 processors
- Distributed System Architecture

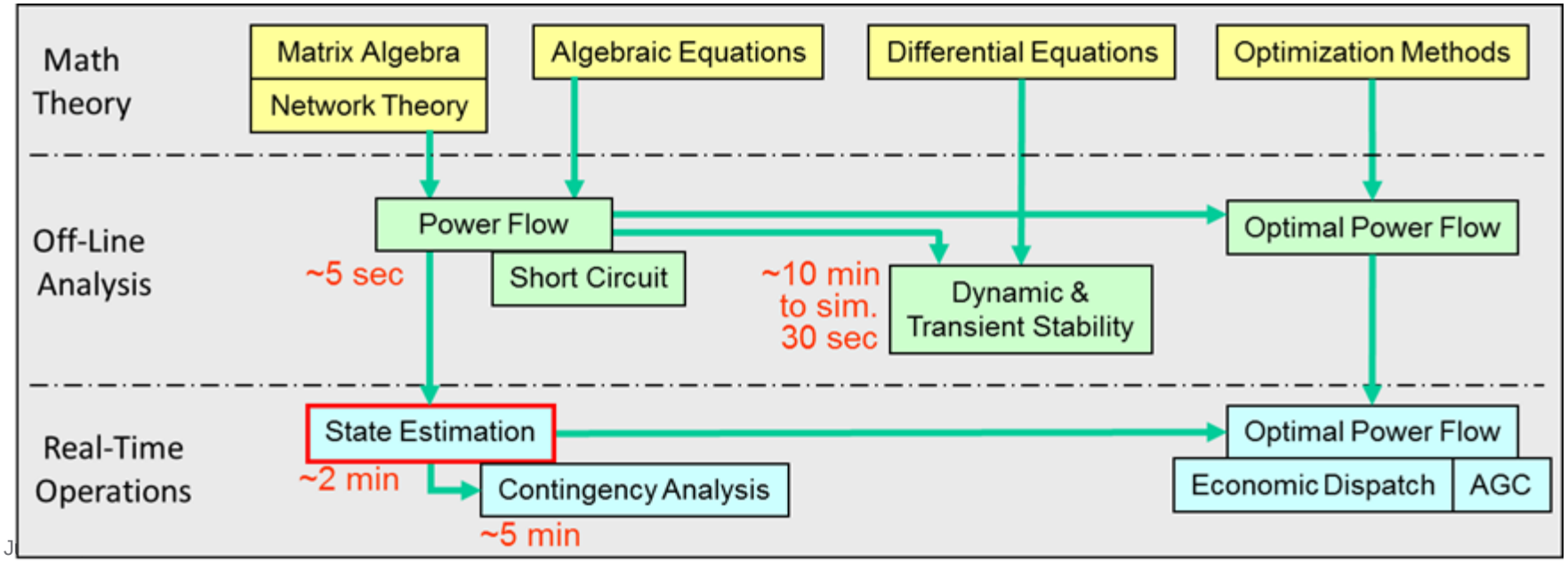

Motivation: three application examples

- Parallel State Estimation
- Parallel Contingency Analysis
- Distributed System Architecture:
- *provides a high level interconnection between each remote control center*

Bad Data Detection

125%

IEEE STANDARD FOR SYNCHROPHASORS FOR POWER SYSTEMS — IEEE Std C37.118-2005

The Time Quality indicator code contained in the lowest 4 bits indicates the maximum time error as determined by the PMU clock function. Bits 0–3 shall be all cleared to 0 when the time function is locked onto its source (e.g., locked onto a satellite in the case of a GPS clock). Bits 0–3 shall be all set to 1 when there is either a clock error or the clock has never been initially set. Conditions of accuracy between these extremes are defined in Table 6. This table is the same as Table F.2, which details time and synchronization methods.

Table 6—Four-bit Time Quality indicator code

Binary	Hex	Value (worst-case accuracy)
1111	F	Fault—Clock failure, time not reliable
1011	B	Clock unlocked, time within 10 s
1010	A	Clock unlocked, time within 1 s
1001	9	Clock unlocked, time within 10^{-1} s
1000	8	Clock unlocked, time within 10^{-2} s
0111	7	Clock unlocked, time within 10^{-3} s
0110	6	Clock unlocked, time within 10^{-4} s
0101	5	Clock unlocked, time within 10^{-5} s
0100	4	Clock unlocked, time within 10^{-6} s
0011	3	Clock unlocked, time within 10^{-7} s
0010	2	Clock unlocked, time within 10^{-8} s
0001	1	Clock unlocked, time within 10^{-9} s
0000	0	Normal operation, clock locked

6.2.3 Leap second bit timing examples

PMU_3_1336170420000.data

```
7   60.00032068024318   12   0.025
#1336170420.033333300#  7   60.000318828827254   12   0.025
7   60.000317397244466   12   0.025
7   60.00031611604938   12   0.025
7   60.00031474907928   12   0.025
7   60.00031335031383   12   0.025
7   60.00031177309721   12   0.025
7   60.000310535030216   12   0.025
7   60.00030891184784   12   0.025
7   60.00030774498719   12   0.025
#1336170420.333333300#  7   60.00030625196109   12   0.025
7   60.00030513834551   12   0.025
7   60.00030349595837   12   0.025
#1336170420.433333400#  7   60.000302204547154   12   0.025
#1336170420.466666700#  7   60.000300942276276   12   0.025
7   60.00029936381106   12   0.025
7   60.00029793723847   12   0.025
```

Bad Data Detection

Pacific Northwest NATIONAL LABORATORY
Proudly Operated by Battelle Since 1965

PMU: SEL4511

PMU: SEL351A

PMU: SEL4512

PMU_1_1336170420000.data

```
7   3.2068024317607346E-4   12   0.025
7   3.188288272571762E-4   12   0.025
7   3.173972444682627E-4   12   0.025
#1336170420.100000100#  7   3.161160493807393E-4   12   0.025
7   3.1474907927720906E-4   12   0.025
7   3.133503138340329E-4   12   0.025
7   3.117730972124804E-4   12   0.025
7   3.1053503021708645E-4   12   0.025
7   3.089118478420801E-4   12   0.025
7   3.077449871894695E-4   12   0.025
7   3.062519610895562E-4   12   0.025
7   3.051383455077588E-4   12   0.025
#1336170420.400000000#  7   3.03495958367239E-4   12   0.025
7   3.0220454715708546E-4   12   0.025
#1336170420.466666700#  7   3.009422762793039E-4   12   0.025
7   2.993638110627478E-4   12   0.025
7   2.97937238471529E-4   12   0.025
```

PMU_2_1336170420000.data

```
7   30.000254822943813   12   0.025
7   30.000253473541854   12   0.025
#1336170421.900000000#  7   30.00025220860501   12   0.025
7   30.000250692731147   12   0.025
7   30.00024938942331   12   0.025
7   30.00024810054065   12   0.025
7   30.000246475007298   12   0.025
#1336170422.066666600#  7   30.0002452760817   12   0.025
7   30.000243968098985   12   0.025
7   30.000242467423323   12   0.025
7   30.00024099906837   12   0.025
7   30.000239518468696   12   0.025
7   30.000238269137153   12   0.025
7   30.000236636150326   12   0.025
7   30.000235476914934   12   0.025
7   30.0002338989777   12   0.025
7   30.00023258935413   12   0.025
```

PMU_3_1336170420000.data

```
7   60.00032068024318   12   0.025
#1336170420.033333300#  7   60.00031882882725
7   60.000317397244466   12   0.025
7   60.00031611604938   12   0.025
7   60.00031474907928   12   0.025
7   60.00031335031383   12   0.025
7   60.00031177309721   12   0.025
7   60.000310535030216   12   0.025
7   60.00030891184784   12   0.025
7   60.00030774498719   12   0.025
#1336170420.333333300#  7   60.00030625196109
7   60.00030513834551   12   0.025
7   60.00030349595837   12   0.025
#1336170420.433333400#  7   60.000302204547154   12   0.025
#1336170420.466666700#  7   60.000300942276276   12   0.025
7   60.00029936381106   12   0.025
7   60.00029793723847   12   0.025
```

Application in Distributed State Estimation

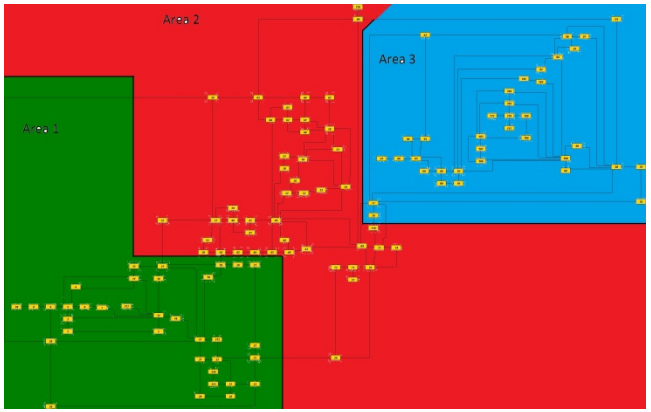

Preprocessing and data preparation: e.g. partitioned IEEE 118-bus system

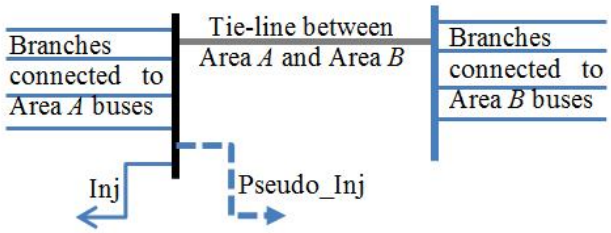

Step 1: Solve the internal state estimation for Area 1 and Area 3 .

Distributed State Estimation Steps:
Subareas run their own state estimation on HPC clusters

Step 2: Using the internal measurements of Area 2, tie line measurements, and the state estimation output messages passed from Area 1 and Area 3 perform the state estimation for Area 2.

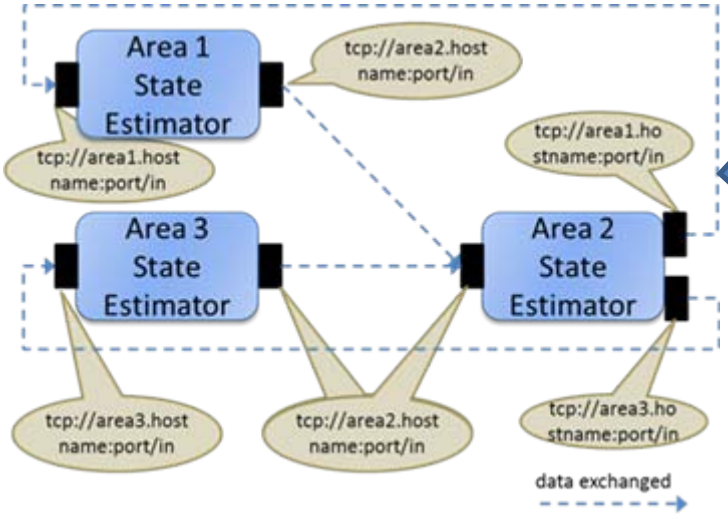

Step 3: Pass updated tie-line information obtained in step 2 to Area 1 and Area 3. Run state estimation for augmented Area 1 and Area 3 with more measurements

Data communication connects subareas

Measurements and Observations

Pacific Northwest NATIONAL LABORATORY
Proudly Operated by Battelle Since 1965

TIME COST FOR STATE ESTIMATION ON THE WHOLE IEEE 118-BUS SYSTEM AND ITS THREE AREAS WITH DATA EXCHANGE (TIME:SECOND)

Measurement	118 system	Area 1	Area 2	Area 3
Perfect power flow+5% noise	0.8501	0.2738	0.4359	0.2756
Perfect power flow + 10% noise	0.8891	0.2745	0.4486	0.2488
Perfect power flow + 20% noise	0.9006	0.2765	0.4489	0.3104

THE EVALUATION METRIC J OF DIFFERENT CASES

	5% noise	10% noise	20% noise
Area 1	8.85e-4	9.69e-4	5.97e-4
Area 2	8.31e-4	9.09e-4	9.38e-4
Area 3	1.85e-3	3.87e-4	1.99e-3
Augmented Area 1	6.82e-4	3.27e-4	5.33e-4
Augmented Area 2	6.88e-4	3.79e-4	9.20e-4
Augmented Area 3	4.26e-4	3.36e-4	3.77e-4

$$J = \frac{1}{N}\sum_{i=1}^{N}[(V_i - V_i^{PF}) * (V_i - V_i^{PF})^*]$$

- Computing Delay

Total time taken (in 3 steps) to run concurrent distributed real-time state estimations on BA level is comparable to run the whole system

- Accuracy

With the help of data exchange, the accuracy of state estimation increases

Outline

- Motivation
  - HPC-enabled power models
  - Distributed computing in Power Grid
  - Data affect the distributed data communication
- Adaptive Middleware for Distributed State Estimation with PMUs
  - Middleware architecture
  - Adaptive middleware components
  - Testbed prototype
  - Architecture validation by simulation
- Future Work

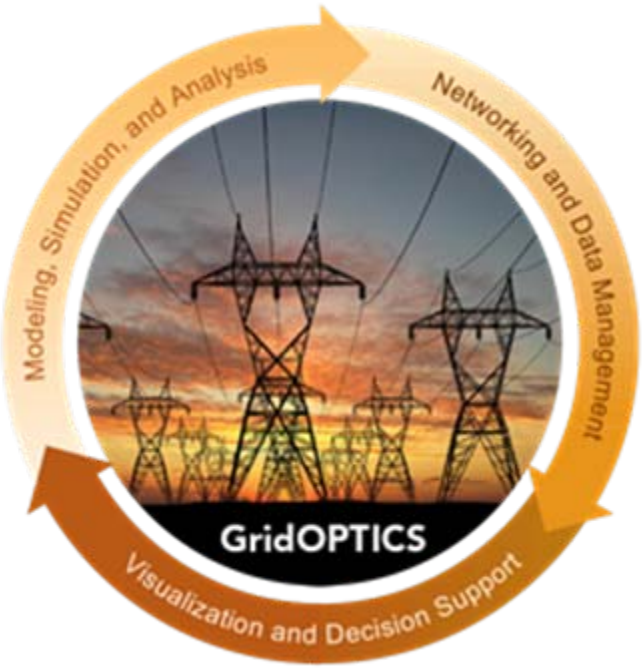

Integration with GridOPTICS™ – Grid Operation and Planning Technology Integrated Capabilities Suite

http://gridoptics.pnnl.gov/

Middleware Architecture for Stream Processing

Pacific Northwest NATIONAL LABORATORY
Proudly Operated by Battelle Since 1965

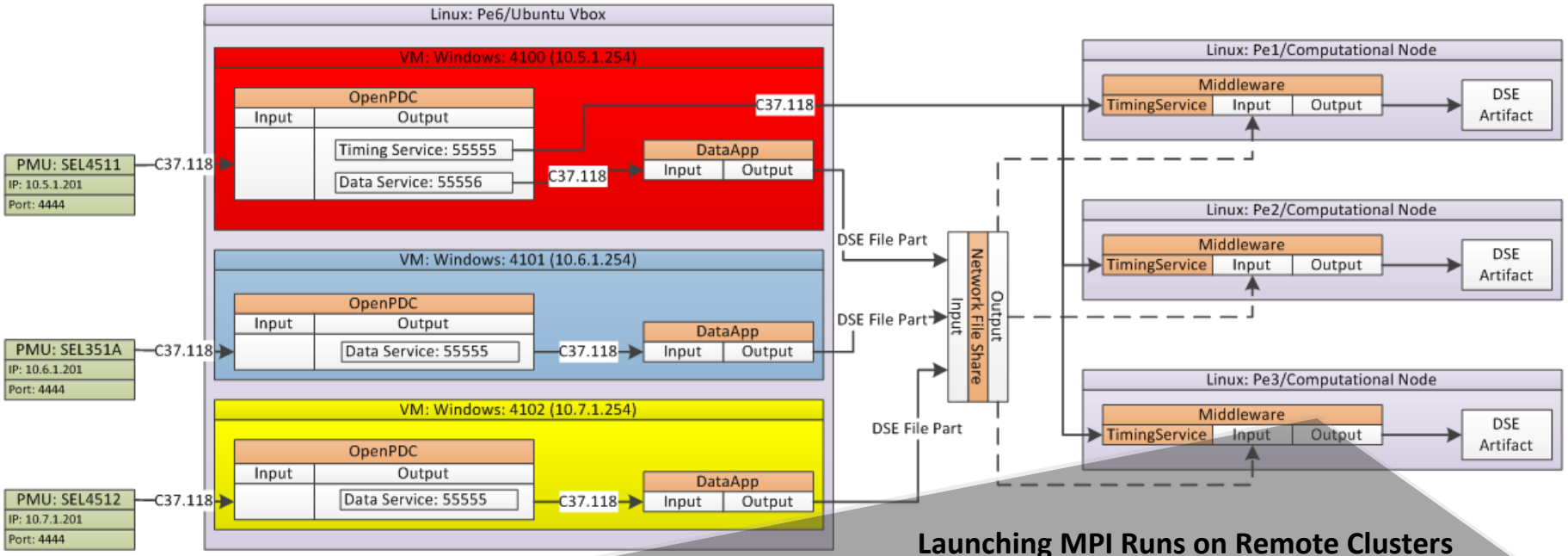

Launching MPI Runs on Remote Clusters

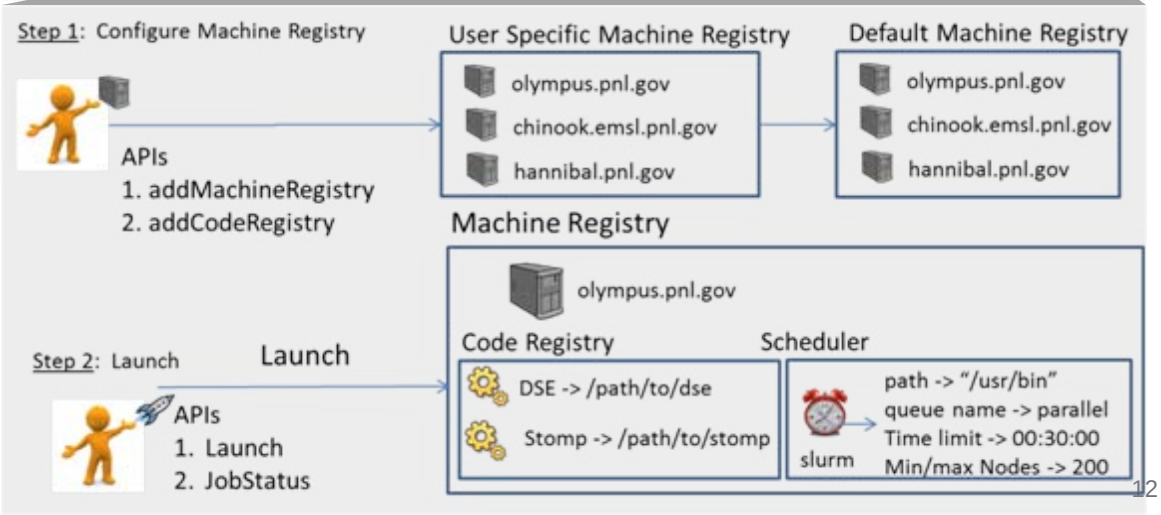

Adaptive Middleware Components

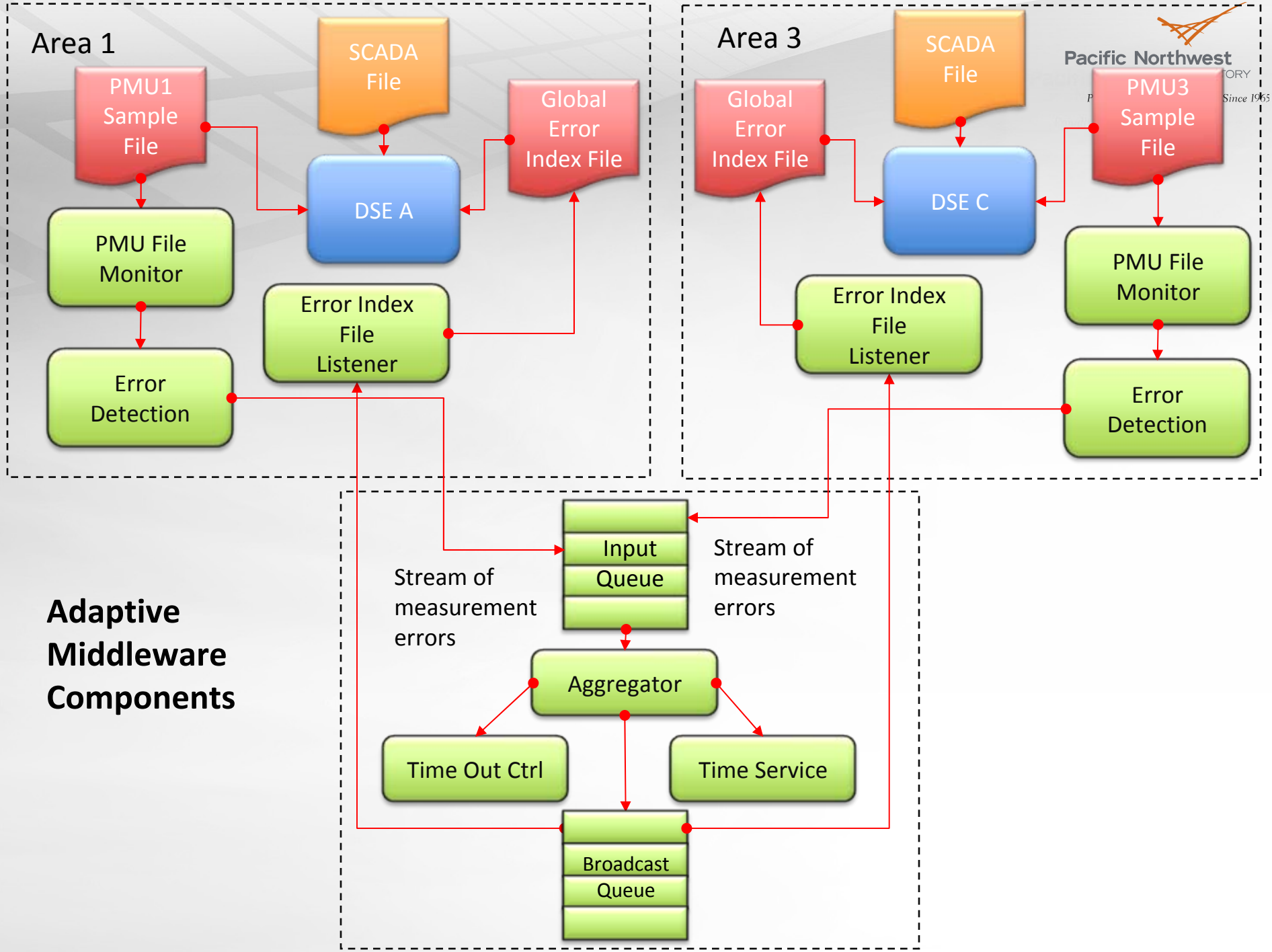

A Testbed Prototype

Pacific Northwest NATIONAL LABORATORY
Proudly Operated by Battelle Since 1965

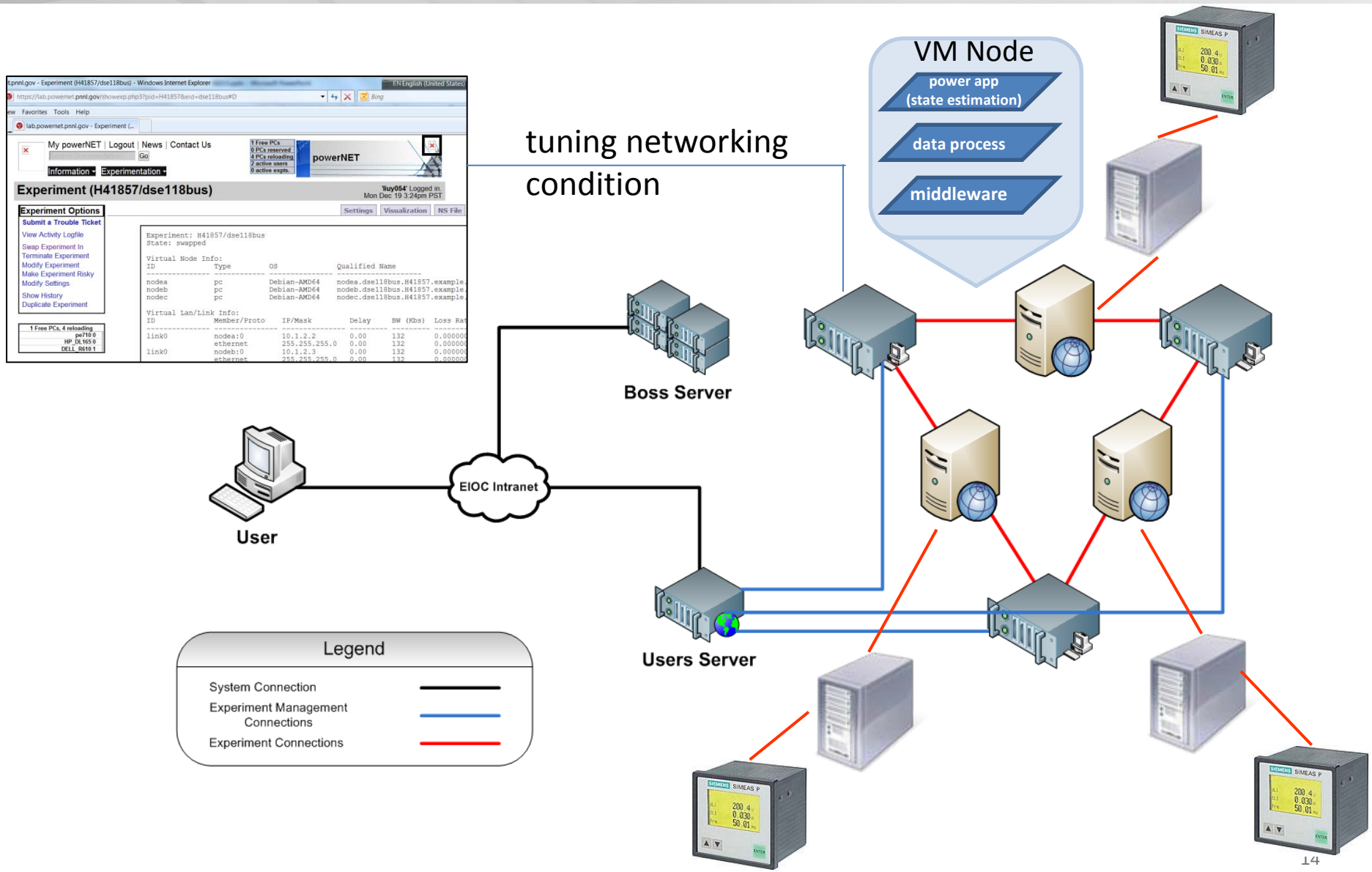

Modeling Middleware Behavior

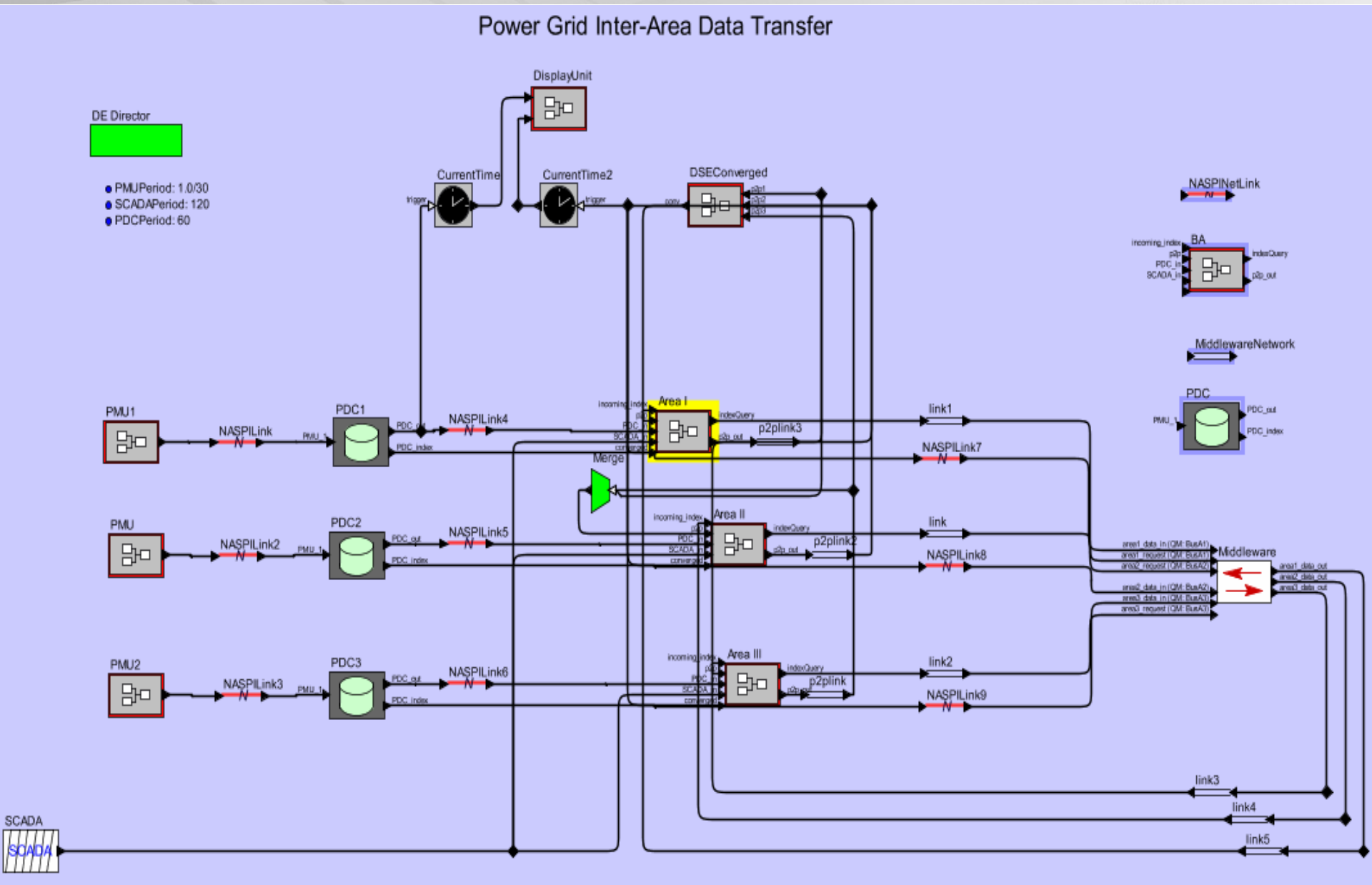

Modeling Middleware Behavior - PDC

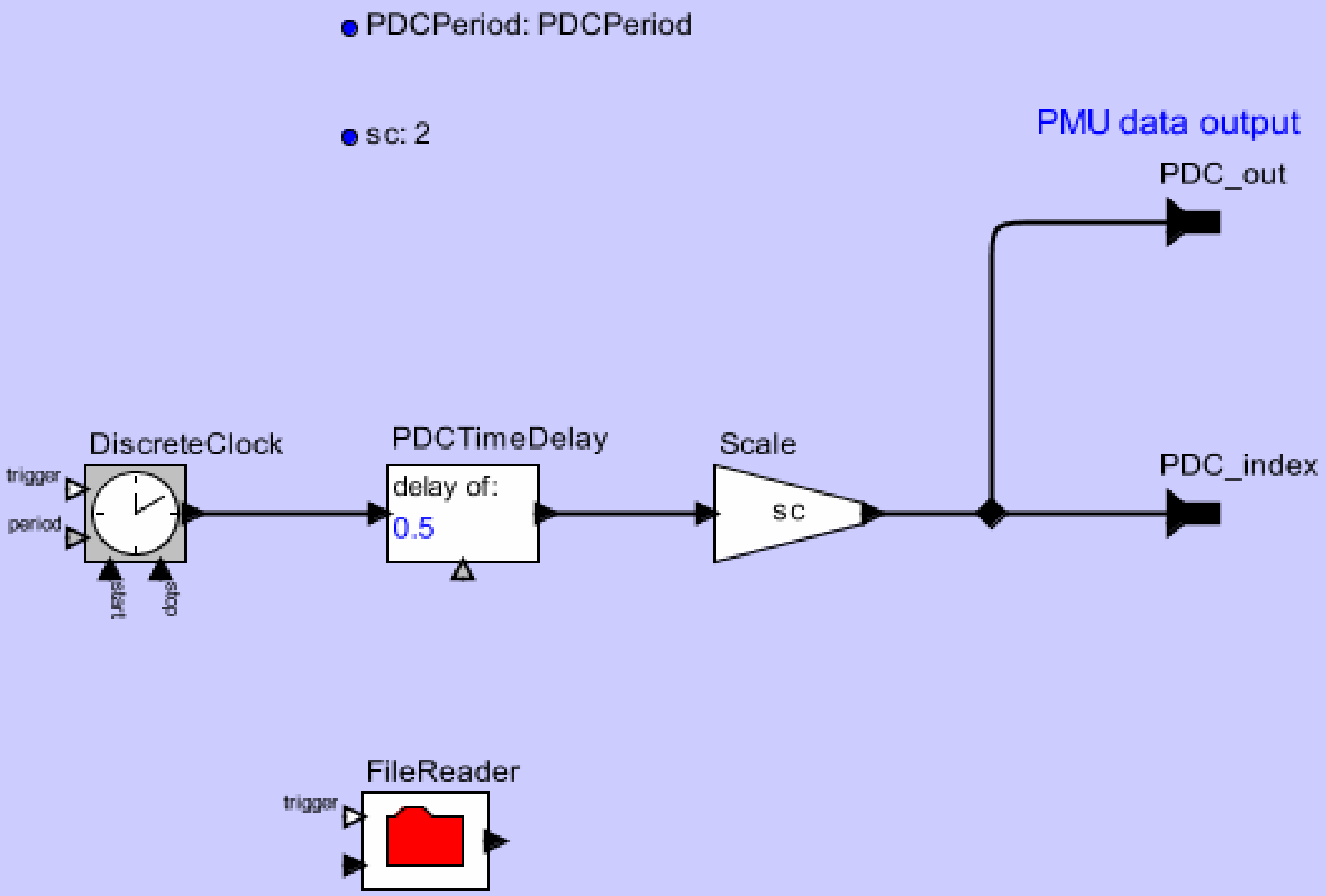

Modeling Middleware Behavior

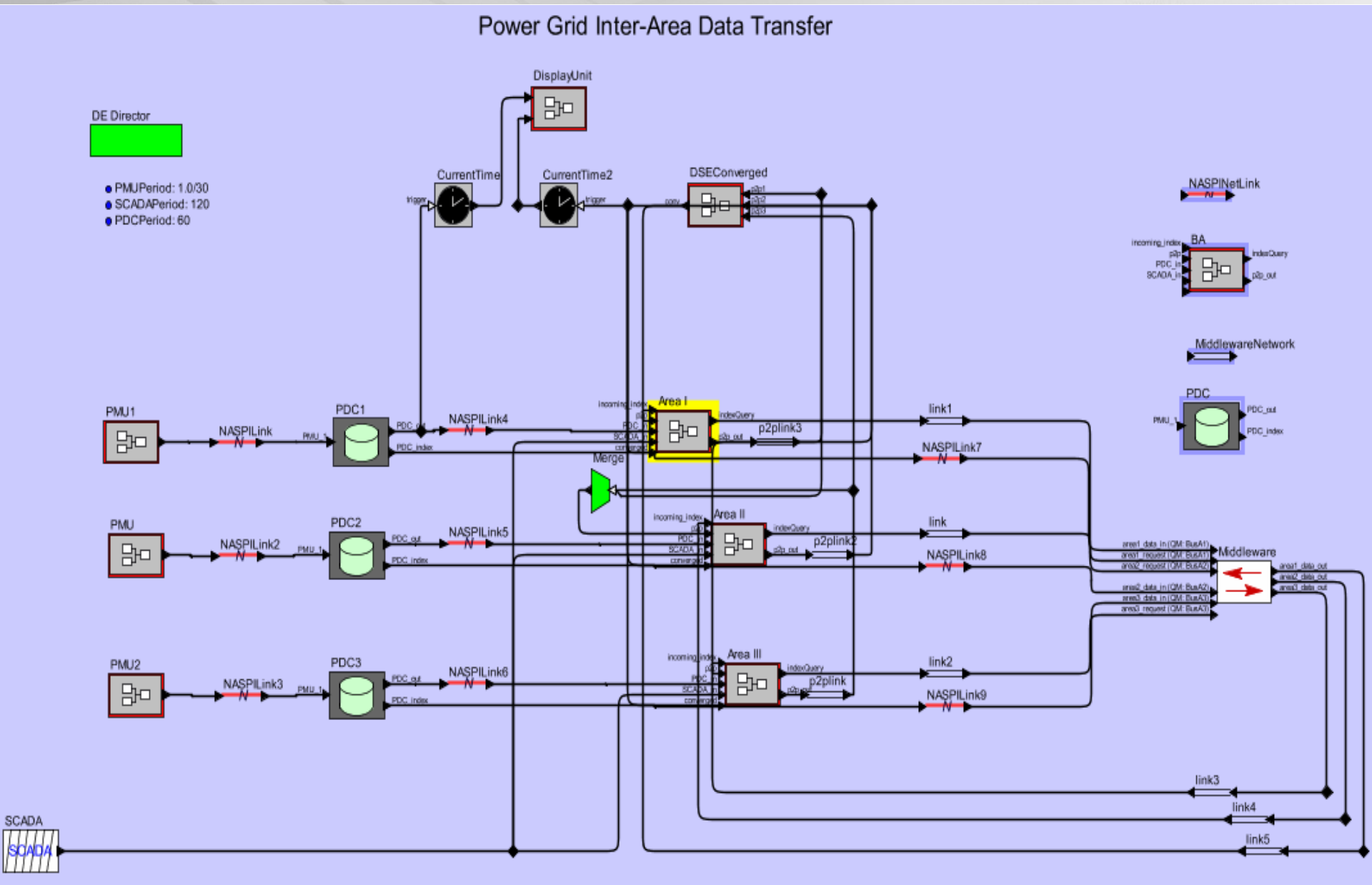

Modeling Middleware Behavior - Network

- linkLength: 400E3 — link length in meters
- propagationSpeed: 1.98E8 — propagation speed in m/s
- constantServiceTime: 1E-3
- packetLength: 128*8 — packet length in bits
- capacity: 1E9 — channel capacity in bps
- standardDeviation: 0.5E-3

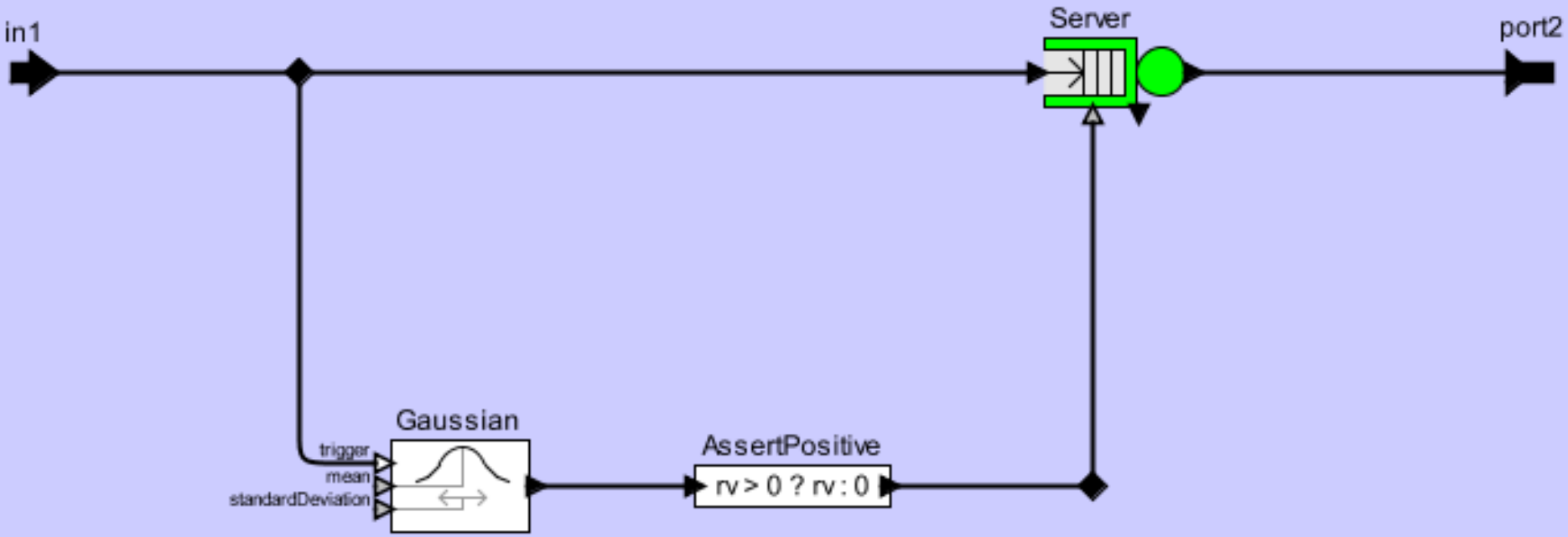

mean: 2*linkLength/propagationSpeed + constantServiceTime + packetLength/capacity
standardDeviation: standardDeviation

Modeling Middleware Behavior

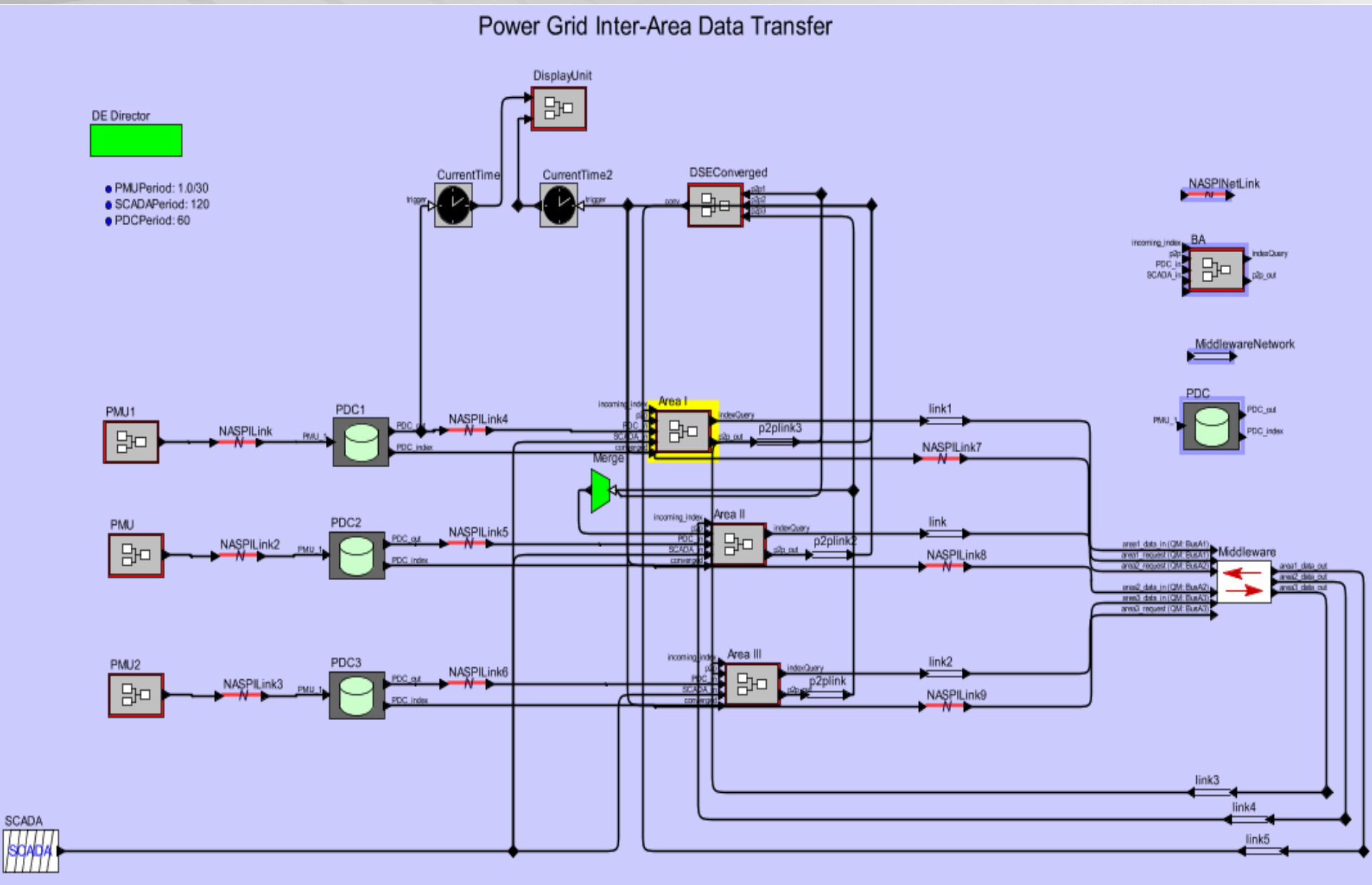

Modeling Middleware Behavior – State Estimation

When new PDC data are received, the area sends out a query request

to the queue, and gets the global .index file, that contains timesteps for #bad data# in 'any' area. Note thats DSE will not be run for these time instances, since at least one area is missing data for this interval.

When a p2p message is received, it is checked whether the local results have converged or not. If so, we calculate the round-trip-time of the DSE. If not, another DSE run is performed and the result is passed along to the peers.

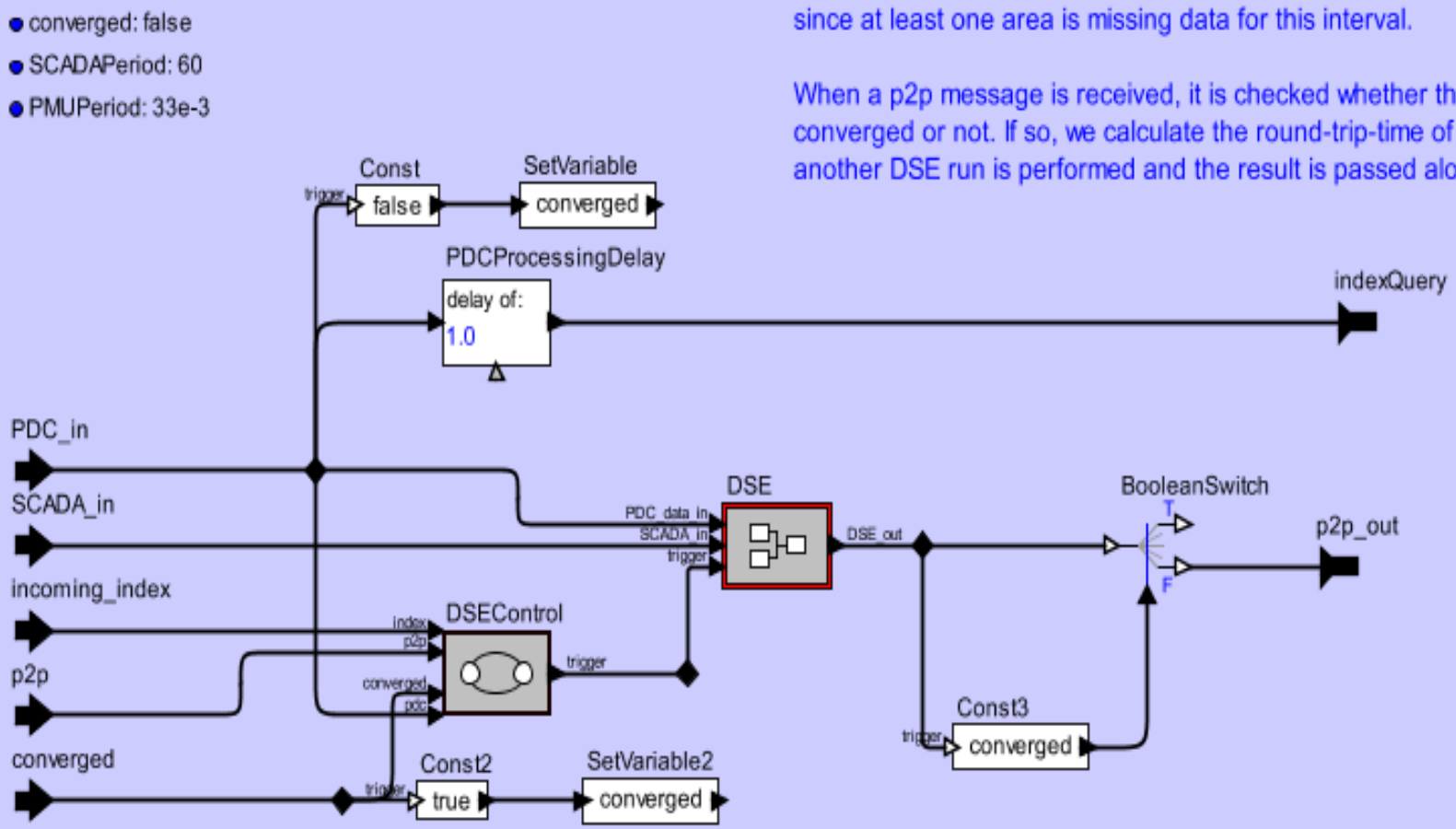

Model Simulation Results of End-to-End Time Taken

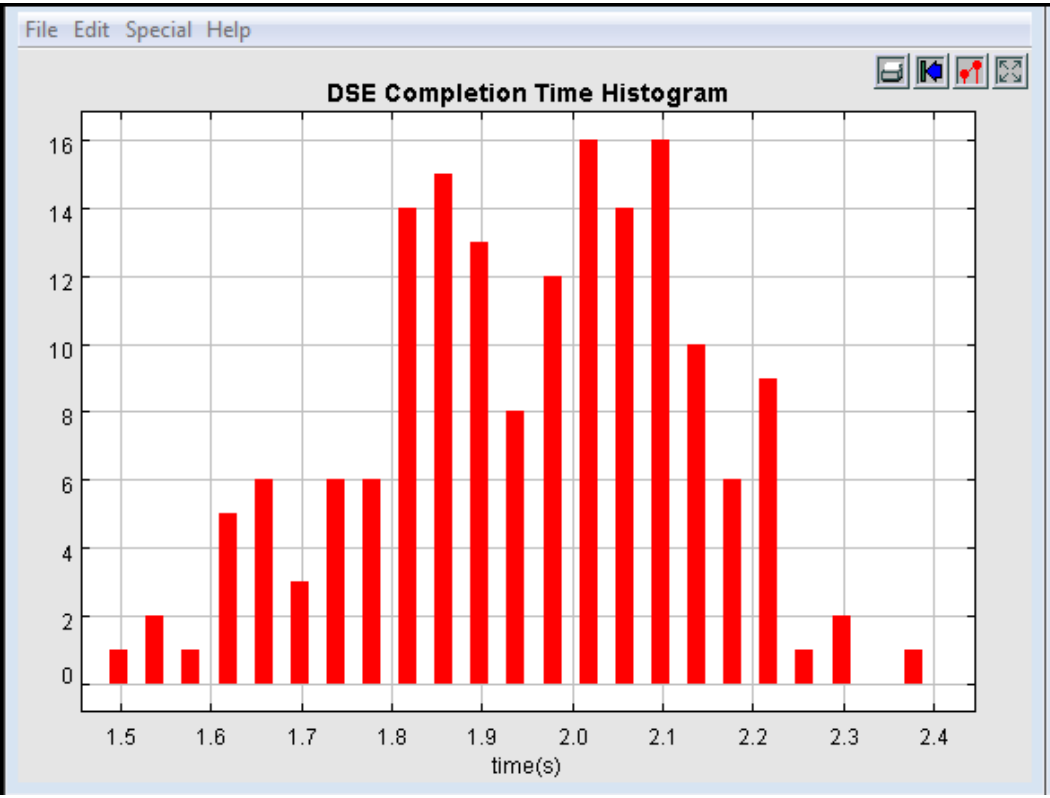

File Help

```
1.8622329394002 s to complete DSE

2.1042819486011 s to complete DSE

1.9544016510008 s to complete DSE

2.1509603925006 s to complete DSE

2.130574066201 s to complete DSE

2.1924517308998 s to complete DSE

2.1382926980004 s to complete DSE

1.8362524295007 s to complete DSE

1.8629172843011 s to complete DSE

1.8169567591995 s to complete DSE

2.2072359656995 s to complete DSE
```

Modeling Middleware Behavior

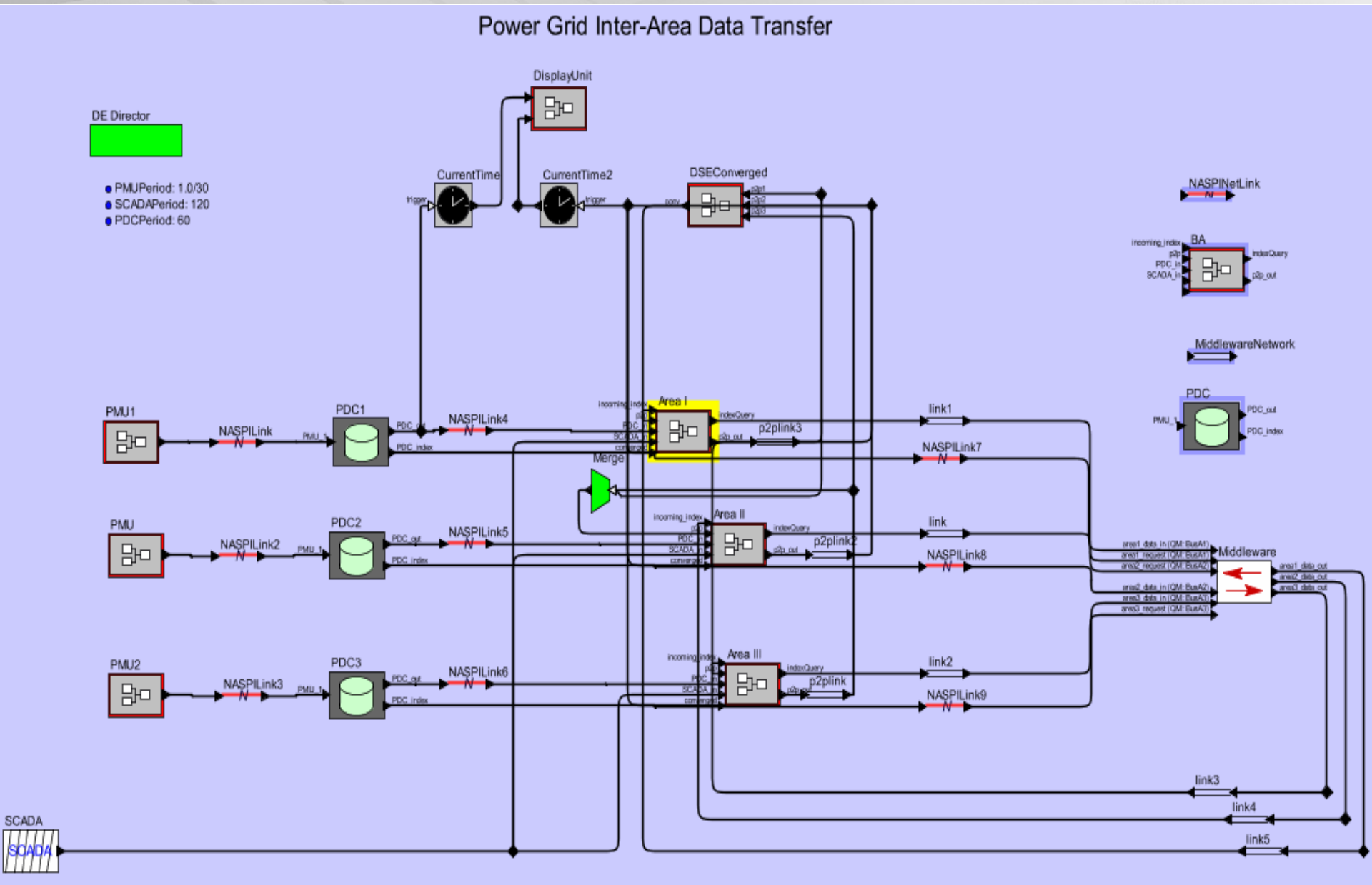

Scalability of the Model and Middleware

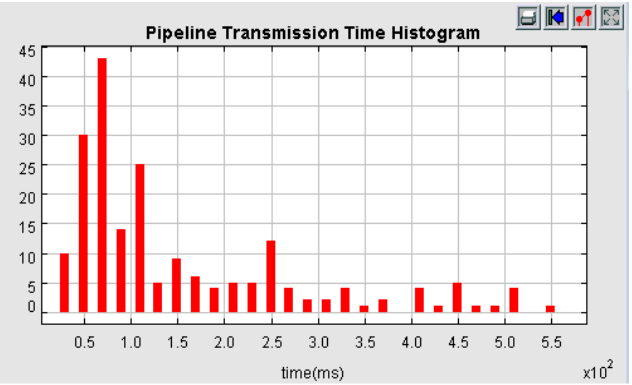

Average: 151 ms

50 PMU data files

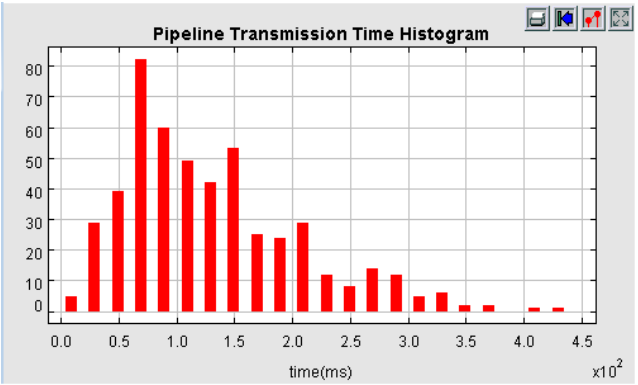

Average: 130 ms

100 PMU data files

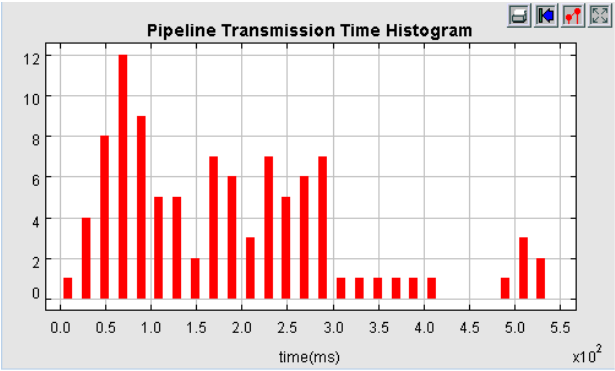

Average: 185 ms

200 PMU data files

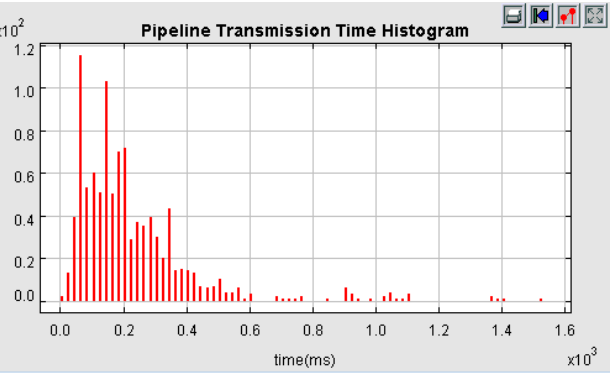

Average: 229 ms

500 PMU data files

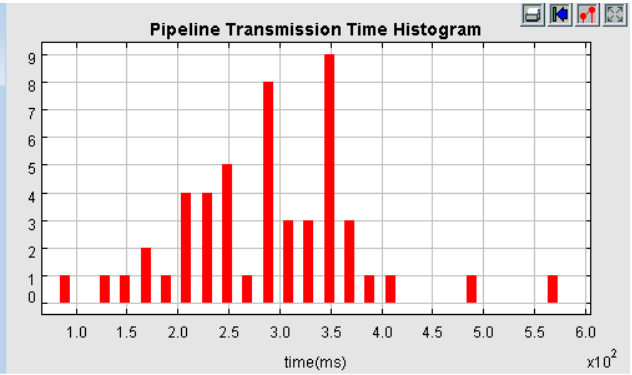

Average: 292 ms

1000 PMU data files

Future Work

- Enhance the middleware with fault tolerance strategies
  - How to overcome failed distributed participants (e.g. state estimators):

  allow that part of the system to become unobservable, or have the entire network split amongst the state estimators that are up and running

- Test the middleware for the WECC model
  - Scale up to handle 10,000 of PMUs and 30~40 distributed participants in peer-to-peer communication
  - A tool suite to model a test case and provide simulation results of computation and communication delays

END OF PRESENTATION

THANK YOU!

Protected Information | Proprietary Information