Office of
Energy Projects

November 2017

Northwest Pipeline LLC **Docket No. CP17-133-000**

North Fork Nooksack Line Lowering Project

Environmental Assessment

Cooperating Agency: US Army Corps of Engineers.

Washington, DC 20426

On the Cover:

This photograph was taken looking east across the proposed work area in Whatcom County, Washington.

FEDERAL ENERGY REGULATORY COMMISSION
WASHINGTON, D.C. 20426

OFFICE OF ENERGY PROJECTS

In Reply Refer To:
OEP/DG2E/Gas Branch 4
Northwest Pipeline LLC
North Seattle Lateral Upgrade Project
Docket No. CP17-133-000

TO THE PARTY ADDRESSED:

The staff of the Federal Energy Regulatory Commission (FERC or Commission) has prepared an environmental assessment (EA) for the North Fork Nooksack Line Lowering Project, proposed by Northwest Pipeline LLC (Northwest) in the above-referenced docket. Northwest requests authorization to replace and lower approximately 1700 feet of 30-inch-diameter natural gas pipeline, and remove about 1,550 feet of previously abandoned 26-inch-diameter pipeline in Whatcom County, Washington. The North Fork Nooksack Line Lowering Project would eliminate a potential obstruction to river flow and improve system reliability.

The EA assesses the potential environmental effects of the construction and operation of the project in accordance with the requirements of the National Environmental Policy Act (NEPA). The FERC staff concludes that approval of the proposed project, with appropriate mitigating measures, would not constitute a major federal action significantly affecting the quality of the human environment.

The U.S. Army Corps of Engineers participated as a cooperating agency in the preparation of the EA. Cooperating agencies have jurisdiction by law or special expertise with respect to resources potentially affected by the proposal and participate in the NEPA analysis.

The North Fork Nooksack Line Lowering Project would consist of the following:

- remove, replace, and lower approximately 1,700 feet of 30-inch-diameter natural gas pipeline in the same trench; and
- remove approximately 1,550 feet of previously abandoned 26-inch-diameter natural gas pipeline that would become exposed during the removal and installation of the 30-inch-diameter pipeline.

The FERC staff mailed copies of the EA to federal, state, and local government representatives and agencies; elected officials; environmental and public interest groups; Native American tribes; potentially affected landowners and other interested individuals and groups; and newspapers and libraries in the project area.

In addition, the EA is available for public viewing on the FERC's website (www.ferc.gov) using the eLibrary link. A limited number of copies of the EA are available for distribution and public inspection at:

Federal Energy Regulatory Commission
Public Reference Room
888 First Street NE, Room 2A
Washington, DC 20426
(202) 502-8371

Any person wishing to comment on the EA may do so. Your comments should focus on the potential environmental effects, reasonable alternatives, and measures to avoid or lessen environmental impacts. The more specific your comments, the more useful they will be. To ensure that the Commission has the opportunity to consider your comments prior to making its decision on this project, it is important that we receive your comments in Washington, DC **on or before December 13, 2017.**

For your convenience, there are three methods you can use to file your comments with the Commission. In all instances please reference the project docket number CP17-133-000 with your submission. The Commission encourages electronic filing of comments and has expert staff available to assist you at (202) 502-8258 or FercOnlineSupport@ferc.gov.

(1) You can file your comments electronically using the eComment feature located on the Commission's website (www.ferc.gov) under the link to Documents and Filings. This is an easy method for submitting brief, text-only comments on a project;

(2) You can also file your comments electronically using the eFiling feature on the Commission's website (www.ferc.gov) under the link to Documents and Filings. With eFiling, you can provide comments in a variety of formats by attaching them as a file with your submission. New eFiling users must first create an account by clicking on "eRegister." You must select the type of filing you are making. If you are filing a comment on a particular project, please select "Comment on a Filing"; or

(3) You can file a paper copy of your comments by mailing them to the following address:

Kimberly D. Bose, Secretary
Federal Energy Regulatory Commission
888 First Street NE, Room 1A
Washington, DC 20426

Any person seeking to become a party to the proceeding must file a motion to intervene pursuant to Rule 214 of the Commission's Rules of Practice and Procedures (18 CFR 385.214).[1] Only intervenors have the right to seek rehearing of the Commission's decision. The Commission grants affected landowners and others with environmental concerns intervenor status upon showing good cause by stating that they have a clear and direct interest in this proceeding which no other party can adequately represent. **Simply filing environmental comments will not give you intervenor status, but you do not need intervenor status to have your comments considered.**

Additional information about the Project is available from the Commission's Office of External Affairs, at **(866) 208-FERC**, or on the FERC website (www.ferc.gov) using the eLibrary link. Click on the eLibrary link, click on "General Search," and enter the docket number excluding the last three digits in the Docket Number field (i.e., CP17-133). Be sure you have selected an appropriate date range. For assistance, please contact FERC Online Support at FercOnlineSupport@ferc.gov or toll free at (866) 208-3676, or for TTY, contact (202) 502-8659. The eLibrary link also provides access to the texts of formal documents issued by the Commission, such as orders, notices, and rulemakings.

In addition, the Commission offers a free service called eSubscription, which allows you to keep track of all formal issuances and submittals in specific dockets. This can reduce the amount of time you spend researching proceedings by automatically providing you with notification of these filings, document summaries, and direct links to the documents. Go to http://www.ferc.gov/docs-filing/esubscription.asp.

---

[1] See the previous discussion on the methods for filing comments.

Table of Contents

List of Figures ii

List of Tables ii

Technical Acronyms and Abbreviations iv

A. Proposed Action 1

- **1.** Introduction 1
- **2.** Project Purpose and Need 2
- **3.** Public Review and Comment 4
- **4.** Proposed Facilities 5
- **5.** Construction, Operation, and Maintenance Procedures 6
- **6.** Land Requirements 8
- **7.** Permits Required 10

B. Environmental Analysis 13

- **1.** Geology and Soils 13
  - **1.1** Geology 13
  - **1.2** Soils 15
- **2.** Water Resources 16
  - **2.1** Groundwater Resources 16
  - **2.2** Surface Water 18
  - **2.3** Wetlands 24
- **3.** Vegetation, Fisheries, and Wildlife 27
  - **3.1** Vegetation 27
  - **3.2** Fisheries 28
  - **3.3** Wildlife 31
  - **3.4** Migratory Birds 32
  - **3.5** Special Status Species 33
- **4.** Land Use, Recreation, and Visual Resources 42
  - **4.1** Land Use 42
  - **4.2** Recreation and Special Use Areas 44
  - **4.3** Coastal Zone 44
  - **4.4** Visual Resources 45
  - **4.5** Hazardous Waste or Contamination 45
- **5.** Cultural Resources 46
- **6.** Air Quality and Noise 47

6.1 Air Quality 47
6.2 Noise 50
7. Reliability and Safety 51
7.1 Safety Standards 51
7.2 Pipeline Accident Data 55
7.3 Impact on Public Safety 58
8. Cumulative Impacts 59
C. Alternatives 69
1. No-Action Alternative 69
2. System Alternatives 70
3. Alternative Protection Measures 70
D. Conclusions and Recommendations 73
E. References 78
F. List of Preparers 82

APPENDIX A **ALIGNMENT SHEET**
APPENDIX B **SITE PLAN AND PROFILE**
APPENDIX C **BIOLOGICAL ASSESSMENT AND ESSENTIAL FISH HABITAT ASSESSMENT**
APPENDIX D **EXTRA TEMPORARY WORK AREAS**

LIST OF FIGURES

Figure 1. Project Location 3
Figure 2. Right-of-Way Cross-section and Workspace 9
Figure 3. HUC-12 Subwatershed Boundary Used to Assess Cumulative Impacts 64

LIST OF TABLES

Table 1. Concerns Identified in Comments on the North Fork Nooksack Line Lowering Project .5
Table 2. Land Requirements 8
Table 3. Permits and Authorizations 11
Table 4. Waterbodies Affected by the Project 19

Table 5. Additional Temporary Workspaces within 50 Feet of a Waterbody or Wetland 23
Table 6. Wetlands Affected by the Project 25
Table 7. Federally Listed, State-Listed, and Other Special Status Species 34
Table 8. Construction and Operation Impacts on Land Use 43
Table 9. Estimated Construction Emissions 49
Table 10. Natural Gas Transmission Pipeline Significant Incidents by Cause (1996-2015).....56
Table 11. Excavation, Natural Forces, and Outside Forces Incidents by Cause (1996-2015) 57
Table 12. Annual Average Injuries and Fatalities - Natural Gas Transmission Pipelines.....58
Table 13. Nationwide Accidental Fatalities by Cause 59
Table 14. Resource-Specific Regions for Determining Cumulative Impacts of the Project 63

TECHNICAL ACRONYMS AND ABBREVIATIONS

BA	Biological Assessment
CFR	Code of Federal Regulations
CH_4	methane
CO	carbon monoxide
CO_2	carbon dioxide
CO_{2e}	carbon dioxide equivalents
Dth/d	dekatherms per day
DOT	U.S. Department of Transportation
EA	environmental assessment
ECRP	Erosion Control and Revegetation Plan
EI	environmental inspector
EFH	essential fish habitat
ELJ	engineered log jams
EPA	U.S. Environmental Protection Agency
ESA	Endangered Species Act
FERC	Federal Energy Regulatory Commission
GHG	greenhouse gases
GWP	global warming potential
HAP	hazardous air pollutant
HCA	high-consequence area
MSFCMA	Magnuson-Stevens Fishery Conservation and Management Act
MAOP	maximum allowable operating pressure
N_2O	nitrous oxide
NAAQS	National Ambient Air Quality Standards
NEPA	National Environmental Policy Act
NPDES	National Pollutant Discharge Elimination System
NGA	Natural Gas Act
NO_2	nitrogen dioxide
NO_x	nitrogen oxides
NOI	*Notice of Intent to Prepare an Environmental Assessment for the Proposed North Fork Nooksack Line Lowering Project, Request for Comments on Environmental Issues, and Notice of Public Scoping Meeting*
NMFS	National Marine Fisheries Service
OEP	FERC's Office of Energy Projects
PCBs	polychlorinated biphenyls
PHMSA	Pipeline and Hazardous Materials Safety Administration
Plan	FERC's *Upland Erosion Control, Revegetation, and Maintenance Plan*
$PM_{2.5}$	particulate matter with an aerodynamic diameter less than or equal to 2.5 microns in diameter
PM_{10}	particulate matter with an aerodynamic diameter less than or equal to 10 microns in diameter
ppm	parts per million
Procedures	FERC's *Wetland and Waterbody Construction and Mitigation Procedures*

SHPO	Washington State Historic Preservation Office
SO_2	sulfur dioxide
Spill Plan	Spill Plan for Oil and Hazardous Materials
TMDL	total maximum daily load
TEWA	Temporary Extra Work Areas
USACE	U.S. Army Corps of Engineers
USFWS	U.S. Fish and Wildlife Service
USGS	U.S. Geological Survey
WAC	Washington Administrative Code
WDFW	Washington Department of Fisheries and Wildlife
WDOE	Washington State Department of Ecology

A. Proposed Action

1. Introduction

As the lead federal agency responsible for evaluating applications filed for permission to construct and operate interstate natural gas pipeline facilities, the staff of the Federal Energy Regulatory Commission (Commission or FERC) has prepared this environmental assessment (EA) to assess the potential environmental impacts of the natural gas facilities proposed by Northwest Pipeline LLC (Northwest). We[2] prepared this EA in compliance with the requirements of the National Environmental Policy Act (NEPA) (Title 40 of the Code of Federal Regulations, parts 1500-1508 [40 CFR 1500-1508]), and the Commission's implementing regulations under 18 CFR 380.

The FERC is the lead federal agency responsible for authorizing natural gas transmission facilities under the Natural Gas Act (NGA), and is the lead federal agency for preparation of this EA. Consistent with NEPA and its responsibilities and regulations, the U.S. Army Corps of Engineers (USACE) participated as a cooperating agency in the preparation of this EA. Cooperating agencies have jurisdiction by law and/or special expertise with respect to environmental impacts associated with a project. Regarding Northwest's project, the USACE has authority pursuant to Section 404 of the Clean Water Act, which governs the discharge of dredged or fill material into waters of the United States.

On April 6, 2017, Northwest filed an application with the Commission in docket number CP17-133-000 under sections 7(b) and 7(c) of the NGA. The assessment of environmental impacts is an important and integral part of the FERC's decision on whether to issue Northwest a Certificate of Public Convenience and Necessity (Certificate) and authorization to abandon and replace certain facilities in Whatcom County, Washington. Northwest's proposed project is referred to as the North Fork Nooksack Line Lowering Project (Project). Northwest proposes to start Project clearing activities in the fall of 2018 and complete construction in the fall of 2019.

Our principal purposes of the EA are to:

- identify and assess the potential impact on the natural and human environment that would result from the implementation of the proposed project;
- identify and recommend reasonable alternative and specific mitigation measures to avoid or minimize environmental impact; and
- encourage and facilitate public involvement in the environmental review process.

This EA will be used by the Commission in its decision-making process to determine whether to authorize Northwest's proposal.

---

[2] "We," "us," and "our" refer to the environmental staff of the FERC's Office of Energy Projects

2. Project Purpose and Need

Northwest's stated purpose of the Project is to replace and lower approximately 1,700 feet of existing 30-inch-diameter Line 1401 pipeline within the North Fork of the Nooksack River floodplain in order to protect the pipe from river channel movement and scour. Northwest states the Project is necessary to ensure the continued safe and reliable operation of Northwest's system, to ensure continued service to Northwest's customers, and to allow the unimpeded movement of the river throughout the historic channel migration zone and floodplain. Furthermore, the Project would allow Northwest to comply with the terms of a 2015 permit regarding engineered log jams (ELJs) installed in the North Fork of the Nooksack River.[3] The Project site location is shown on figure 1.

Section 7(b) of the NGA specifies that no natural gas company shall abandon any portion of its facilities subject to the Commission's jurisdiction without the Commission first finding that the abandonment will not negatively affect the present or future public convenience and necessity.

Under section 7(c) of the NGA, the Commission determines whether interstate natural gas transportation facilities are in the public convenience and necessity and, if so, grants a Certificate to construct and operate them. The Commission bases its decisions on technical competence, financing, rates, market demand, gas supply, environmental impact, long-term feasibility, and other issues concerning a proposed project.

---

[3] In 2015, due to ongoing river channel migration of the North Fork of the Nooksack River, Northwest implemented a temporary solution to prevent pipeline exposure by installing ELJs along approximately 500 feet of the north bank upstream of the pipeline crossing. Conditions contained in the permits received from Whatcom County Planning and Development Services, Washington Department of Natural Resources, and the Washington Department of Fish & Wildlife, authorizing the installation of the ELJs in 2015, obligated Northwest to complete a long-term pipeline protection solution (i.e., lowering) by the end of 2020.

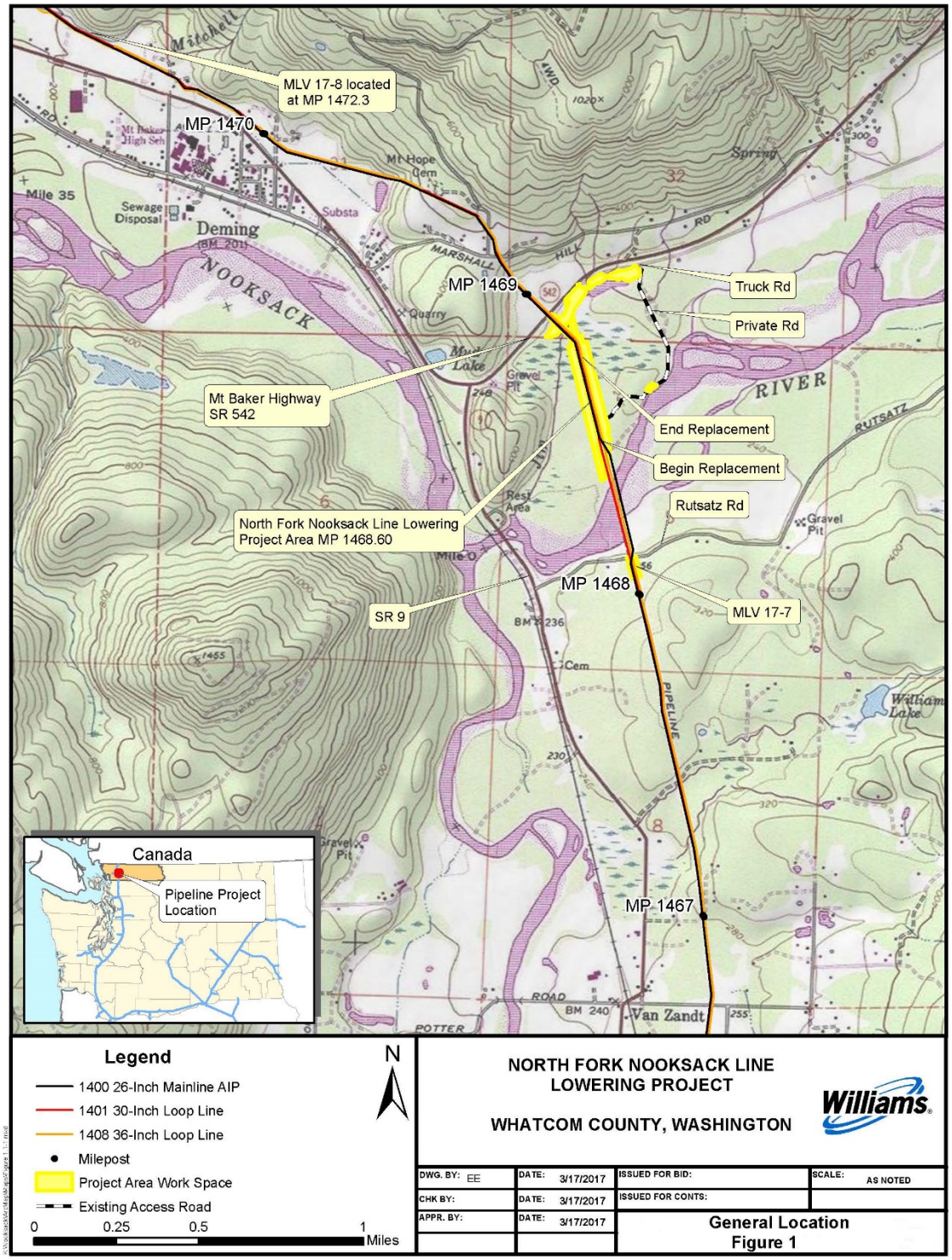

Figure 1. Project Location

3. Public Review and Comment

FERC issued a Notice of Application for the Project on April 20, 2017; a motion to intervene was received from Southwest Gas Corporation.

On May 9, 2017, the FERC issued a *Notice of Intent to Prepare an Environmental Assessment for the Proposed North Fork Nooksack Line Lowering Project, Request for Comments on Environmental Issues, and Notice of Public Scoping Meeting* (NOI) in Docket No. CP17-133-000. The NOI was mailed to 87 parties, including affected landowners; federal, state, and local government representatives and agencies; elected officials; environmental and public interest groups; and Native American tribes.

During the scoping period we received comments from the U.S. Environmental Protection Agency (EPA) Region 10 which expressed concerns over seismic risks; water resources and quality; construction runoff; noxious weeds and invasive plants; air quality; endangered species protection; and cumulative effects[4]. Two sets of comments were also provided by the Lummi Indian Business Council (Council), the governing body of the Lummi Nation. The Council initially requested a 45-day extension to the comment period[5] and later submitted comments identifying concerns over salmon habitat protection, restoration, and enhancement; protection of fish resources during construction; pipeline design depth; cumulative effects; and impacts from dewatering discharges. The environmental issues raised are discussed below in the appropriate sections, as identified in table 1.

---

[4] In its comments, the EPA requested that the EA include an evaluation of the potential impact of the Project on environmental justice populations. Because the Project only consists of the in-kind replacement of a 1,700 foot segment of pipeline in an undeveloped floodplain area, we believe the Project has no potential for socioeconomic or environmental justice impacts and therefore this issue is not addressed in this EA.

[5] Although an extension of time was not provided for in response to the May 22, 2017 request, the Council submitted detailed scoping comments on July 25, 2017, and these are addressed in the EA.

Table 1. Concerns Identified in Comments on the North Fork Nooksack Line Lowering Project	
Comment Type	**EA Section Addressing the Comment**
Project Design	A.5
Temporary Roadway Construction	A.6
Soils and Geology Seismic Risks	B.1
Water Resources Impacts on water use and quality Effects on wetlands and riparian areas	B.2 B.2.2
Vegetation, Aquatic Resources, and Wildlife Endangered species Site restoration Fisheries Invasive Plants	B.3.4 B.3.1 B.3.2 B.3.1
Tribal Consultation	B.5
Air Quality	B.6
Cumulative Effects	B.8

4. Proposed Facilities

Northwest proposes to:

1. remove and dispose of approximately 1,700 feet of existing 30-inch-diameter Line 1401 pipeline;
2. install, secure, and hydrotest approximately 1,700 feet of new 30-inch-diameter pipeline with a minimum of 20 feet of cover;
3. remove and dispose of approximately 1,550 feet of existing and previously abandoned in place 26-inch-diameter Line 1400 pipeline;
4. install a weld cap on the remaining abandoned in place Line 1400 pipeline, and purge/fill this pipeline with nitrogen north toward mainline valve 17-8;
5. install a weld cap on the remaining section of the Line 1400 pipeline segment beneath the Nooksack River and fill it with grout. The grout would substantially increase the effective weight of the remaining portion of the Line 1400 pipeline (which is already coated with 3 inches of reinforced concrete) across the historical river channel, forcing the pipe to remain buried or further settle down into the riverbed to minimize the chance that it is exposed in the future; and
6. after construction is complete, disable the ELJs that were installed in 2015 by disconnecting metallic connectors such as rods, bolts, and chains.

Northwest is not proposing to modify existing or construct new aboveground facilities in connection with this Project, nor would they change the capacity of the pipeline to transport natural gas. The existing 30-inch-diameter Line 1401 pipeline and the abandoned 26-inch-diameter Line 1400 pipeline are located within Northwest's existing 75- to 85-foot-wide permanent easement that also includes Northwest's 36-inch-diameter Line 1408 pipeline. The Line 1408 pipeline, installed by horizontal directional drill (HDD) as part of Northwest's Capacity Replacement Project (Docket No. CP05-32-000) in 2006, would not be affected by the proposed work. The Project facilities are depicted on the alignment sheet in appendix A, and a plan and profile drawing of the work area is included in appendix B. There are no non-jurisdictional facilities associated with the Project.

5. Construction, Operation, and Maintenance Procedures

The proposed facilities would be designed, constructed, tested, operated, and maintained to conform with or exceed federal, state, and local requirements, including the U.S. Department of Transportation's (DOT) Minimum Safety Standards in 49 CFR 192, "Transportation of Natural and Other Gas by Pipeline: Minimum Federal Safety Standards," and 18 CFR 380.15, "Guidelines to be Followed by Natural Gas Pipeline Companies in the Planning, Clearing, and Maintenance of Rights-of-Way and the Construction of Aboveground Facilities." In addition, Northwest completed hydrotechnical engineering studies of erosion and scour risk[6] to determine the design depth for the pipeline placement.

Northwest has developed a Spill Plan for Oil and Hazardous Materials (Spill Plan), and an Unanticipated Discovery Plan for cultural resources. In addition, Northwest has incorporated our *Upland Erosion Control, Revegetation, and Maintenance Plan* (Plan) and *Wetland and Waterbody Construction and Mitigation Procedures* (Procedures).[7] Northwest has proposed certain alternate measures to our Plan and Procedures to account for site-specific environmental resources and construction requirements of the Project area. These are discussed in Section B.2. We have reviewed these plans and find them acceptable.

Northwest states it would use a single construction spread with approximately 60 workers and 8 construction inspectors and support personnel to complete construction of the Project. The construction is estimated to take about 4 to 5 months to complete. Northwest would not hire any new permanent employees for day-to-day operation of these facilities.

Northwest proposes to assign one full-time environmental inspector (EI) to the construction activities. The EI would be responsible for ensuring compliance with all environmental permit requirements from construction through restoration. Northwest would install the new pipeline using conventional pipeline construction methods. This would consist of

---

[6] Northwest's hydrotechnical studies were included as attachments to Environmental Resource Report 6, which can be accessed under CP17-133 at https://elibrary.ferc.gov/idmws/search/fercgensearch.asp. See Accession number 20170406-5337.

[7] Our Plan and Procedures can be accessed on the FERC website at http://www.ferc.gov/industries/gas/enviro/guidelines.asp

a sequential process of surveying, clearing, grading, excavating, stringing and bending, welding, coating, backfilling, hydrostatic testing, cleanup, and restoring the right-of-way.

Northwest proposes to begin vegetation clearing in the fall of 2018 and initiate construction activities in the summer of 2019. Prior to construction, Northwest would stake the pipeline centerline, other utilities, approved workspaces, and environmentally sensitive areas. Public state roads (Mt. Baker Highway/State Route 542 and State Route 9) and Whatcom County roads (Truck Route and Rutsatz Roads) would be used to access the construction work area along with one existing private access road. Clearing crews would cut vegetation at ground level and fell trees within the construction work area.

Northwest would terminate gas service in its existing Line 1401 pipeline and pig[8] the pipeline to remove any residual gas or condensed liquids. It would then use excavators to uncover the Line 1401 and 1400 pipeline sections. Approximately 1,700 feet of the existing 30-inch-diameter pipeline would be exposed, cut into segments, removed, and disposed of. Approximately 1,550 feet of existing and previously abandoned 26-inch-diameter pipeline would also be cut and removed from the trench, and well caps would be welded to the ends of the remaining 26-inch-diameter pipeline. A system of well points would be installed to a depth of approximately 15 feet below the bottom of the excavation to dewater the area surrounding the trench. The trench would then be excavated to a depth of approximately 24 feet below grade.

Northwest would then stage the new 30-inch-diameter pipeline segments along the right-of-way and lower them into the trench. The segments would be welded together and coated in the trench. All welds would be visually and radiographically inspected and repaired, as necessary, and crews would backfill the trench with the excavated subsoil and topsoil. The pipeline would be hydrostatically tested with water obtained from the groundwater well system. Once the hydrostatic testing is complete, the test water would be discharged to the surface for infiltration at temporary extra workspace area (TEWA) 09 (see appendix A). Northwest would follow the restoration measures identified in its Erosion Control and Revegetation Plan (ECRP)[9] to grade and re-seed the right-of-way. Northwest requests a modification from section V.A.1 of our Plan, which requires final cleanup of an area to be completed within 20 days after backfilling the trench. Northwest states the nature and extent of Project restoration activities including removal of the dewatering system and restoration activities at Jim Creek would not allow compliance with the 20-day requirement. Northwest would maintain temporary erosion controls until final cleanup is completed. We find this acceptable; however, we would monitor the status of the work area to ensure it is properly stabilized through final clean-up and subsequent restoration.

---

8 A "pig" is a tool that the pipeline company inserts into and pushes through the pipeline for cleaning the pipeline, conducting internal inspections, or other purposes.

9 Northwest's ECRP is a set of company-developed best management practices for pipeline construction and restoration. Specific measures are discussed in the various resource sections of this EA. We have reviewed the ECRP and find that it is consistent with our Plan and Procedures.

In addition to the standard construction techniques described above, Northwest would use specialized techniques where certain sensitive environmental features such as wetlands, waterbodies, and agricultural lands are crossed. The details on these specific types of crossings are outlined in sections B.2 and B.4 of this EA.

6. Land Requirements

Table 1 summarizes the land acreage requirements for construction and operation of Northwest's Project. In order to construct the replacement, Northwest would disturb a total of about 24.3 acres of land. Of this disturbance, 6.1 acres of existing right-of-way would be affected, and 18.2 acres would be required for TEWAs. Northwest would allow this 18.2 acres of land to revert to its previous use following construction. No new or expanded permanent easement would be required for this Project.

Table 2.
Land Requirements

Project Component	Length or Number of Sites	Land Affected During Construction (acres)	Land Affected (acres) During Operation - New Permanent Easement
Pipeline Facilities	1,700 Feet	6.11	0.00
Temporary Extra Work Areas	14	18.17	0.00
Existing Access Road Requiring Minor Improvements (grading, graveling, and limbing/brushing)	3,100 feet	0.00	0.00
Total		**24.28**	**0.00**

Typically, Northwest would construct its pipeline using a 100-foot-wide construction right-of-way. However due to the depth of the excavation needed to lower the pipeline beneath the floodplain, Northwest is proposing a construction workspace of 320 feet in width (figure 2) to stockpile topsoil, subsoil, and timber slash. This would consist of its existing right-of-way, which varies between 75 and 85 feet in width, and approximately 240 feet of TEWA (see drawing in appendix A). Following Project construction, Northwest would reduce the easement area maintained from its current 75-85 feet to 50 feet in width.

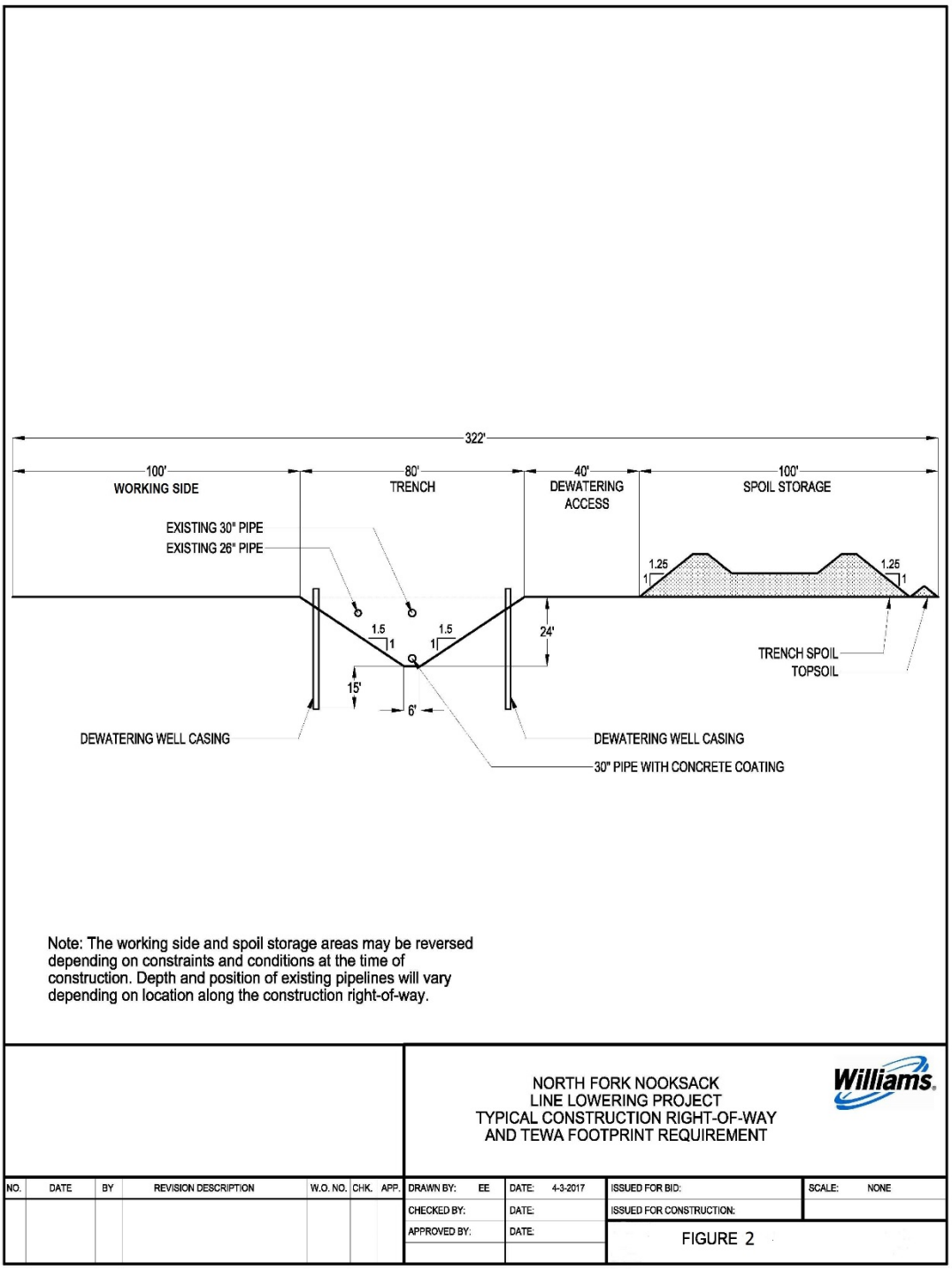

Figure 2. Right-of-Way Cross-section and Workspace

Northwest has requested to use 14 TEWAs along the construction right-of-way. These extra workspaces, totaling approximately 18.2 acres, are required for construction access, staging and spoil storage; trench dewatering activities; construction equipment and materials storage; contractor vehicle parking; and timber and slash storage. These are discussed more thoroughly in section B.4 of this EA. Our Procedures contain a number of specifications regarding the location of TEWAs in proximity to waterbodies and wetlands and specify that TEWAs be set back 50 feet, except where the adjacent upland consists of actively cultivated or rotated cropland or other disturbed land (see Procedures sections V.B.2.a., V.B.2.b., VI.B.1.a., and VI.B.1.b.). Northwest has identified 6 areas where site-specific or topographic constraints would make the 50-foot setback infeasible and has requested modifications to the Procedure. These requested modifications are discussed in section B.2.

Northwest would access the work site using existing public roads and one 0.6-mile-long private road that currently provides operational access to the existing right-of-way. Northwest would temporarily use these access roads during Project construction and restoration. These roads would be repaired or fully restored after completion of the Project. No permanent access roads would be constructed as part of the Project.

During Project operation, the right-of-way would be maintained and monitored in accordance with our Plan and Procedures. Northwest would clear a 50-foot width in uplands no more frequently than every 3 years. In riparian areas, a 10-foot-wide corridor over the 30-inch-diameter pipeline would be maintained in an herbaceous state, and trees that are within 15 feet of the pipeline centerline may be cut and removed (Procedures section V.D.1). Northwest would not use herbicides within 100 feet of a waterbody. As the 36-inch-diameter Line 1408 is installed at a depth of greater than 50 feet, vegetation maintenance would not be conducted above this pipeline.

7. Permits Required

Northwest would construct its Project in accordance with all federal, state, and local requirements. Some of the major permits and consultations required are listed in table 3 below. Northwest is responsible for obtaining all applicable permits and approvals for the Project, regardless of whether they appear in the table.

Table 3.
Permits and Authorizations

Agency	Permit/Approval	Filing Date (actual or anticipated)	Anticipated Approval
Federal Permits/Approvals			
Federal Energy Regulatory Commission	Certificate of Public Convenience and Necessity	April 2017	*Pending*
U.S. Army Corps of Engineers	Clean Water Act (CWA) Section 404 – NWP 12	October 2017	April 2018
U.S. Environmental Protection Agency	CWA Section 402, Water Quality Certification (Tribal Allotment Lands)	October 2017	October 2018
	CWA Section 402, Construction National Pollutant Discharge Elimination System (NPDES) Permit (Tribal Allotment Lands)	December 2017	February 2018
U.S. Fish and Wildlife Service	Endangered Species Act (ESA) Section 7 Consultation	November 2017	February 2018
	Fish and Wildlife Coordination Act		
	Migratory Bird Treaty Act		
National Marine Fisheries Service	ESA Section 7 Consultation	November 2017	February 2018
	Magnuson-Stevens Fish Conservation Act		
State Permits/Approvals			
Washington Department of Ecology	Clean Water Act Section 401, Water Quality Certification	November 2017	October 2018
	Coastal Zone Management Act	December 2017	October 2018
	Construction Stormwater NPDES Permit	Following State Environmental Policy Act (SEPA) approval (December 2017)	February 2018
	Hydraulic Project Approval	Following SEPA Approval	February 2018

Table 3.
Permits and Authorizations

Agency	Permit/Approval	Filing Date (actual or anticipated)	Anticipated Approval
Washington Department of Fish and Wildlife	Bald Eagle Management	(December 2017)	
Washington Department of Natural Resources	Forest Practices Act (Alternate Plan)	Following SEPA approval (January 2018)	March 2018
Department of Archaeology and Historic Preservation	National Historic Preservation Act – Section 106 Consultation	February 2017	March 2017
County Permits			
Whatcom County	SEPA review	September 2017	December 2017
	Shoreline Substantial Development Permit	September 2017	April 2018
	Critical Areas Ordinance	September 2017	April 2018
	Land Disturbing Activity (Grading Permit)	September 2017	April 2018
Tribal			
Nooksack Indian Tribe	Cultural Resources/Project Review	July 2016	April 2018
Lummi Nation	Cultural Resources/Project Review	July 2016	April 2018
Tulalip Tribes of Washington	Cultural Resources/Project Review	July 2016	April 2018
Suquamish Tribe	Cultural Resources/Project Review	July 2016	April 2018
Samish Indian Nation	Cultural Resources/Project Review	July 2016	April 2018

B. Environmental Analysis

1. Geology and Soils

1.1 Geology

Northwest's proposed replacement is within the Puget Lowland Physiographic Province of Washington State. The area is characterized by broad low-lying regions and gentle to moderately sloping glacial terrain. The topography of the Project site is primarily the result of deposition of Quaternary glacial and fluvial sediments that have since been modified by fluvial and mass-wasting processes and by human activity. Large influxes of sediment as a result of volcanic activity in the Cascade Mountains have also modified area streams and valleys. Much of the sediment near the surface in the North Fork Nooksack River Valley is largely the result of lahar deposition (mud and debris flows that originate on a volcano) and subsequent reworking by the rivers.

The line lowering Project would take place within the flat alluvial river valley with elevation of the construction area being approximately 235 feet above mean sea level. At the Project site, the North Fork Nooksack River floodplain is approximately 4,000 feet in width and is primarily underlain at the surface by post-glacial Holocene alluvium comprised of well stratified and sorted cobbles, gravel, sand, silts, and clay with a depth of 10 to 80 feet beneath the pipeline right-of-way. The surficial bedrock beneath the site is classified as Padden Member of the Chuckanut Formation (pebbly sandstone, sandy conglomerate, mudstone, and minor coal) (Golder 2004).

The Project site consists of unconsolidated sediments and the pipeline would be removed/installed by conventional excavation and trenching techniques. Blasting is not anticipated based on the results of the geotechnical investigations and prior experience. If blasting were found to be needed, Northwest would develop a detailed Blasting Plan in accordance with applicable DOT and U.S. Occupational, Safety, and Health Administration requirements. The Blasting Plan would include, among other things, the use of blasting mats or soil cover to prevent the scattering of loose rock, measures to prevent accidental detonations, all necessary permits and authorizations, notification of nearby building owners, and seismic monitoring of the blasts to ensure vibration limits are not exceeded.

In western Washington, mining operations historically consisted of coal mining and sand, stone, and gravel quarries. Sand and gravel in Washington is primarily mined from the extensive deposits of glacial outwash in the Puget Lowland. The majority of sand and gravel mines in the region are near urban centers along the Interstate 5 corridor. There are no active or historic mining operations in the vicinity of the Project, and the closest gravel pit is more than 6 miles from the Project site, therefore, we do not anticipate any impacts of the Project on these mining operations, or vice versa.

Earthquake frequency in the general area is relatively low to moderate. The Project does not cross any identified faults, and probabilistic acceleration maps show a 10 percent probability of experiencing peak ground acceleration of approximately 30 to 40 percent of gravity in 50 years (475 year return period). The average peak ground acceleration in the area of the Project

site is estimated at 0.21 percent gravity (U.S. Geological Survey [USGS] 2002, 2003). For reference, an acceleration of 0.10 percent gravity is the approximate threshold for damage to older structures or structures not made to resist earthquakes.

Secondary seismic effects associated with earthquakes are often more serious than the shaking itself. Secondary seismic effects that have occurred in the Project area and could occur in conjunction with future earthquakes include surface faulting and soil liquefaction. Soil liquefaction is a physical process in which saturated, cohesionless soils temporarily lose their bearing strength when subjected to strong and prolonged shaking such as that experienced during earthquakes. Because the Project would be located in an area containing lahar inundation, with liquefiable soil and shallow groundwater, the geological units encountered at the Project site were assigned a high seismic risk rating (Golder 2004). Soils with high seismic risk ratings are considered susceptible to liquefaction during strong seismic shaking events.

As such, the Project would be considered at moderate risk from active seismicity or surficial ground rupture. Northwest's proposal includes installing the pipeline at a depth of 20 feet below the surface and coating the pipeline in concrete. These measures would reduce the chance of damage to the pipeline or its coating should an event occur and cause movement of the pipe.

As the lowering Project would take place within the level river floodplain, it would have a low landslide susceptibility. Landslides can be triggered from natural causes such as erosion of a river bank undercutting the toe of a slope or from man-made causes such as increasing the weight at the head of the slope by adding structures during development. Neither of these possibilities is likely, as the pipeline is being lowered to avoid riverbank undercutting and exposure, and development of aboveground structures over the pipeline and easement would be prohibited.

The Project area is underlain by Pleistocene glacial deposits such as lodgment till and outwash, and by Holocene alluvial deposits. Because these sediments are deposited fluvially or from melting out from the base of glacial ice, fossils are unlikely to be preserved or discovered in these sediments, therefore the Project is not expected to affect paleontological resources.

The Project is within a designated Federal Emergency Management Agency Flood Zone A (1 percent chance of annual flood inundation). Northwest has conducted erosion and scour analyses which analyzed the historical movement of the channel over time and evaluated the potential of channel movement into the Project area (Golder 2014, 2016). Erosion and scour from channel migration, flooding, and related riverine processes are expected to pose a potential threat to the existing 26-inch and 30-inch pipelines buried near the surface. The Project is intended to remove the abandoned 26-inch pipeline and lower the 30-inch pipeline elevation through the north floodplain area to mitigate for these identified threats; therefore, the work would need to be carried out within the floodplain.

Northwest undertook a project during the summer/fall of 2015 to install ELJs around the sagbend/overbend location along approximately 500 feet of the riverbank north of the pipeline crossing. These ELJs were designed and permitted to temporarily stabilize the north bank until a long-term solution could be implemented to mitigate the risk of exposure while allowing the

unimpeded movement of the river throughout the historical channel migration zone. As a result of the state and county permits it received to construct the ELJs in 2015, Northwest would complete a long-term solution (i.e., the line lowering Project) within five years of installing the ELJs (2020) and then disable the ELJs by disconnecting the metal connectors holding the logs together. In their comments on the NOI, the Council requested consideration of an alternative whereby Northwest would not disabled the ELJs and would instead maintain them into the future. As the disabling of the ELJs is a condition of the permits issued by Whatcom County, the Washington Department of Natural Resources, and the Washington Department of Fish and Wildlife (WDFW), we did not consider this alternative in this EA, but encourage Northwest to continue to consult on this issue with the Council and other stakeholders during the permitting process.

In conclusion, the lowering and replacement would not result in significant impacts on geologic resources. The potential for geologic hazards to affect the Project would be mitigated by the strength and flexibility of the pipe, use of concrete coating, and the 20 foot depth of burial.

1.2 Soils

The soils crossed by the Project were identified and assessed using the Natural Resources Conservation Service Soil Survey Geographic Database and the Soil Survey of Whatcom County. Soils along the Project primarily fall within the Pilchuck Series which are characterized by deep, excessively-drained soils, ranging from 0 to 3 percent slopes, and consisting mostly of loamy fine sand and fine sand.

The soils along the Project were initially disturbed during the installation of Northwest's existing 26-inch-diameter and 30-inch-diameter pipelines. The Project would not cross any actively farmed crops; however, all the soils in the Project area may be classified as prime farmland or soil of statewide importance. As discussed below in section B.4.1, the Project would disturb 5.13 acres of pasture land or hay field, of which 0.23 acre would be in the permanent easement. The primary impacts of the Project on soils would occur during construction, and result mostly from erosion or compaction.

Erosion is a natural process where surface soils are worn away, typically by wind or water. This process can be accelerated by human disturbance, such as tillage, over-grazing, timber harvesting, or right-of-way clearing. Factors such as soil texture, structure, slope, vegetation cover, rainfall intensity, and wind intensity can influence the degree of erosion. Soils most susceptible to erosion by water are typified by bare or sparse vegetation cover, non-cohesive soil particles with low infiltration rates, and moderate to steep slopes. Soils typically more resistant to erosion by water include those that occupy low relief areas, are well vegetated, and have high infiltration capacity and internal permeability. None of the soils along the route are considered susceptible to erosion by water.

Wind-induced erosion often occurs on dry soil where vegetation cover is sparse and strong winds are prevalent. The majority of the soils to be impacted by Project work are considered highly susceptible to erosion by wind.

Soil compaction modifies soil structure and can result in a reduction in the porosity and moisture-holding capability of the soil, thus restricting rooting depth. Compaction also decreases infiltration and thus increases runoff and the potential for water erosion. In general, the potential for soil compaction in the Project area is low along the replacement. About 8 percent (0.51 acre) of the soils that would be crossed by the pipeline facilities are considered prone to compaction, while 30 percent (5.3 acres) of the TEWAs would be susceptible to compaction.

Construction activities such as clearing, grading, trench excavation, backfilling, and the movement of construction equipment along the right-of-way may impact soil resources. Clearing removes protective vegetation cover and exposes the soil to the effects of wind, rain, and runoff, which increases the potential for soil erosion and sedimentation in sensitive areas. Grading, spoil storage, and equipment traffic can compact soil, reducing porosity and increasing runoff potential. Trenching of stony/rocky or shallow-to-bedrock soils can bring stones or rock fragments to the surface that could hinder restoration of the right-of-way. Construction activities can also affect soil fertility and facilitate the dispersal and establishment of weeds. In addition, contamination from spills or leaks of fuels, lubricants, and coolant from construction equipment could adversely affect soils.

To reduce construction impacts on soils, Northwest would implement its ECRP, which includes the following measures:

- installing and maintaining proper erosion and sediment control measures during construction to reduce the velocity of and redirect runoff;
- minimizing the duration and quantity of soil exposure and reestablishing vegetation cover as soon as possible following final cleanup;
- removing excess rock resulting from construction from at least the top 12 inches of soil to the extent practicable in agricultural pastures and other areas at the landowner's request;
- restoring the construction work area to preconstruction contours;
- removing, segregating, and replacing topsoil up to 12 inches deep in pastures, hayfields, and other areas at the landowner's request;
- using corrective measures such as scarifying or discing soils in pastures and hayfields if tests show that compaction has occurred;
- monitoring the construction right-of-way and maintaining erosion and sediment controls until final stabilization is achieved; and
- removing and stockpiling the upper 12 inches of wetland soils for use in wetland restoration actions.

We conclude that Northwest's implementation of its ECRP would adequately minimize erosion and sedimentation during construction and operation for this Project.

2. Water Resources

2.1 Groundwater Resources

Northwest proposes to replace and lower its pipeline over the Puget-Willamette Trough regional aquifer system. Groundwater in the Nooksack River Valley is contained in unconsolidated deposit aquifers commonly available to shallow wells. These aquifers consist

primarily of glacial sand and gravel deposits that are as much as 3,000 feet thick near Seattle, approximately 50 miles south of the Project site. Well yields vary greatly in the regional aquifer; however, yields from sand and gravel aquifers commonly exceed 2,000 gallons per minute. Water wells in the Project area are within unconsolidated-deposit aquifers (composed largely of glacial sand and gravel deposits), which provide freshwater for public water supplies, industries, homes, and agricultural uses (USGS 1994).

The Project would not cross any EPA-designated Sole Source Aquifers, or be within 400 feet of any wellhead protection areas. No private groundwater wells or springs and seeps are within 200 feet, and no sources of contaminated groundwater were identified within 0.25 mile of the Project (Washington Department of Health 2017, Washington State Department of Ecology [WDOE] 2016e).

The primary construction activities that could affect groundwater are excavation of a trench approximately 25 feet in depth, dewatering of the trench, soil mixing and compaction, and fuel and lubricant handling. Construction would involve shallow, temporary, and localized excavation. Shallow groundwater resources could sustain temporary, direct impacts from the dewatering drawdown extending beyond the edge of the work area and minor, indirect impacts from changes in overland water flow and recharge caused by clearing and grading of the right-of-way. In addition, soil compaction from construction could reduce the soil's ability to absorb water; however, as identified in section B.1.2 above, the compaction potential of the Project area is generally low.

To lower the pipeline to the design depth, Northwest would implement an extensive trench dewatering system. The dewatering program would include the use of well points along the entire construction right-of-way, drilled on either side of the trench alignment for the new 30-inch-diameter pipe (see figure 2). A typical system may include wells installed on 30-foot centers, extending 15 feet below the bottom of the trench; containing a filter casing surrounded by filter media (pea rock). A pump would be installed in each casing with a discharge riser connected at the surface to a header pipe that connects all of the well points together. The common header pipe discharge would be directed into piping that would run to the west of the Project area to allow groundwater to discharge directly or indirectly into Jim Creek or the North Fork Nooksack River through an energy dissipating structure. Northwest may treat the water before it is discharged to surface waters, as required by the terms of its expected National Pollutant Discharge Elimination System (NPDES) permit.

This extensive dewatering program is designed to temporarily lower groundwater levels and effectively dry up portions of Jim Creek and the waterbodies in close proximity to the construction area. To minimize potential effects to aquatic species from the dewatering activities, Northwest has developed a Fish Exclusion and Relocation Plan which identifies procedures for salvaging aquatic species in all affected waterbodies in the Project area. After the new 30-inch-diameter pipeline is installed, the dewatering well system would be removed, and groundwater levels would return to preconstruction conditions.

After installation of the pipeline, Northwest would restore the ground surface as closely as practicable to original contours, decompact soils in accordance with its ECRP, and revegetate any exposed soils to ensure restoration of pre-construction overland flow and recharge patterns.

The greatest threat to groundwater from construction would be from a spill of hazardous liquids. Northwest would construct its Project in accordance with its ECRP and Spill Plan. Vehicle fueling, maintenance, and equipment storage would be restricted to the construction right-of-way and/or TEWAs. Certain areas such as wetlands and waterbodies are restricted from these fueling and maintenance activities. Hazardous materials, chemicals, fuels, and lubricating oils would be stored in secondary containment in upland areas at least 100 feet from waterbodies and wetlands in accordance with our Procedures. Additionally, should a spill occur, Northwest would notify agencies and take response actions in accordance with its Spill Plan.

The pipeline would be hydrostatically tested in accordance with DOT regulations to ensure that the pipeline system is capable of operating at the maximum allowable operating pressure (MAOP). Northwest would use approximately 59,000 gallons of water for hydrostatic testing. The water would be obtained from the groundwater well points installed to lower the groundwater table. Northwest does not plan to add any chemicals to the hydrostatic test water. Following completion of the test, the water would be discharged into an energy dissipation device at a rate to prevent scour, erosion, and sediment migration to sensitive resources, in accordance with the NPDES permit conditions and the ECRP. Northwest would be responsible for obtaining any permits associated with the hydrostatic test water withdrawal and discharge.

We conclude that with implementation of these minimization methods, no significant impacts on groundwater resources would occur as a result of the Project.

2.2 Surface Water

The Project is in the Nooksack River-Frontal Bellingham watershed (Hydrologic Unit Code [HUC] 10 - 1711000405), in the Nooksack Sub-basin (HUC 17110004). The Project area is bounded to the south by the North Fork Nooksack River, and it is approximately 0.6 mile upstream from the confluence of the Nooksack River, North Fork Nooksack River, and South Fork Nooksack River. The Project is entirely within the floodplain of the North Fork Nooksack River. The North Fork Nooksack River basin is 306 square miles.

The North Fork Nooksack River and eight tributaries are present in the Project area. The Project would not cross the North Fork Nooksack River itself; however, the trench line would cross one perennial tributary (Jim Creek). Temporary bridges would cross the other seven waterbodies to provide construction ingress and egress. No major waterbodies (i.e., waterbodies greater than 100 feet wide) would be crossed. All waterbodies are fish-bearing. Table 4 shows the waterbodies affected by the Project.

Northwest proposes to cross Jim Creek, to remove the existing 26-inch- and 30-inch-diameter pipelines and install the new 30-inch-diameter pipe, using a dry open-cut technique. Construction is anticipated to take 14 to 17 weeks and would coincide with the driest months of the year (May to late September) (see section A.1).

To construct the Project, Northwest would use the same roads currently used to operate and maintain the existing pipelines, including three paved public roads and one private graveled/dirt road. No improvements would be made the paved public roads; the private road would only require minor improvements (e.g., grading and graveling) within the existing road

footprint. Use of these access roads would not impact waterbodies. Northwest does not propose to use an offsite contractor yard; instead, Northwest would utilize TEWAs to stage and store construction equipment and materials (see section A.6).

The Project-specific open-cut construction method involves excavation of the pipeline trench across Jim Creek; removal of the existing 26- and 30-inch-diameter pipelines; installation of a prefabricated segment of 30-inch-diameter pipeline; and backfilling of the trench with native material, while the construction area is isolated from any stream flow. Excavation and backfilling of the trench would generally be accomplished using backhoes operating from one or both banks of the waterbody.

The current 303(d) impaired waters list does not identify the North Fork Nooksack River or tributaries near the Project area, or the Nooksack River itself (0.6 mile downstream from the Project area), as impaired (WDOE 2016d). One segment of the North Fork Nooksack River, approximately 3 miles upstream from the Project area, is listed as impaired for pH. All eight streams in the Project area are Category 1 streams (meets tested standard for clean waters), as designated by the State Water Quality Assessment. No municipal surface water intakes are within 3 miles downstream of the Project area.

Table 4.
Waterbodies Affected by the Project

Waterbody Name	Stream Flow	FERC Classification	Crossing Status
North Fork of the Nooksack River (Stream A)	Perennial	Major	Not crossed
Stream B	Intermittent	Minor	Bridge crossing
Stream C	Perennial	Intermediate	Bridge crossing
Jim Creek (Stream D)	Perennial	Intermediate	38-foot crossing/dry open-cut and bridge crossing
Jim Creek (Stream D1)	Intermittent	Minor	Bridge crossing
Jim Creek (Stream E)	Intermittent	Minor	Bridge crossing
Stream EE	Intermittent	Minor	Bridge crossing
Stream G	Intermittent	Minor	Bridge crossing
Stream I	Intermittent	Minor	Bridge crossing

The Nationwide Rivers Inventory lists more than 3,400 free-flowing river segments in the United States that are believed to possess one or more “outstandingly remarkable” natural or cultural values judged to be at least regionally significant. These rivers are potential candidates for inclusion in the National Wild and Scenic River System. The Nooksack River possess outstanding natural values including, important salmon resource, wintering nesting area for eagles, and cascades and waterfalls. The Nooksack River along with its South and Middle Forks was added to the Inventory in 1982 (National Park Service 2016).

The Project is entirely within the 100-year floodplain of the North Fork Nooksack River.

Utilities are a permitted use within the floodplain, according to the Whatcom County Shoreline Management Master Plan. Northwest would file applications for Shoreline Substantial Development and/or Shoreline Conditional Use Permits as determined by Whatcom County.

Whatcom County's Critical Areas Ordinance and its regulations includes limitations on new or expanded uses within aquatic area buffers. The North Fork Nooksack River and Jim Creek are mapped as Fish Habitat Conservation Areas by Whatcom County's Critical Areas Ordinance Maps. Maintenance, repair, or replacement of existing utility lines and facilities and installation of new lines and facilities are allowed alterations within the Critical Area. The County established a Habitat Conservation Area buffer requirement of 100 feet, which applies to all the streams in the Project area, except for the North Fork Nooksack River, which has a buffer of 50 feet because it is classified as a shoreline. We expect Northwest to meet applicable requirements imposed by Whatcom County.

The Project is within Washington's Coastal Zone Management Area, and as such, the Project is subject to a Federal Consistency Determination. The WDOE is responsible for determining consistency with the federal Coastal Zone Management Act. The Act provides for the management of the nation's coastal resources by calling for the "effective management, beneficial use, protection, and development" of the nation's coastal zone.

As noted before, Northwest would use the dry open-cut method to cross Jim Creek. Construction would take 14 to 17 weeks and occur during the driest months of the year. The Washington Department of Fish and Wildlife (WDFW) typically recommends an in-stream work period of three weeks; however, because of the longer construction period required for this Project, the in-work time period restriction would need to be extended. The WDFW required Northwest to develop a fish salvage plan to minimize potential effects from the dewatering program; the Fish Exclusion and Relocation Plan is discussed further in section B.3.2. Northwest would also utilize construction bridges to cross all other waterbodies where water is present in the streambed. Design, installation, use, and maintenance of temporary construction bridges would be in accordance with our Procedures.

To prevent the Project area and Jim Creek from being inundated with water during high flow events, Northwest proposes to install a temporary barrier/coffer dam at the inlet of Jim Creek at its confluence with the North Fork Nooksack River (TEWA 11). The barrier would also help to exclude fish from entering Jim Creek during a high flow event. Installation of this barrier would be conducted in dry conditions to avoid in-water work and prevent potential turbidity impacts. In its comments on the NOI, the Council requested that the rock sill at the inlet of Jim Creek be removed. In section 3.2.3.4 of its Environmental Resource Report 3, Northwest proposed to lower the sill as a mitigation to restore affected habitats and also provide provide enhancement and compensatory measures for adverse effects to salmonids and critical habitats. The Council also requested consideration of an alternative of conducting a feasibility study of additional measures for enhancing the habitat value of Jim Creek including installation of an ELJ at the Jim Creek inlet to direct additional flow into and through Jim Creek and the removal of rock rip rap at the mouth of the creek. Northwest's proposed habitat enhancement and mitigation measures will be reviewed by the National Marine Fisheries Service (NMFS) and the U.S. Fish and Wildlife Service (USFWS) to ensure restoration of critical habitat as required by the Endangered Species Act (ESA), and we find that process sufficient to ensure appropriate

habitat enhancement measures are employed.

As discussed previously, groundwater would be pumped prior to and during trench construction to remove groundwater from the trench and the general area surrounding the trench. Additionally, Northwest would block water flow from entering Jim Creek from the North Fork Nooksack River before groundwater wells and pumps are installed and operational. Accordingly, Jim Creek is expected to not have any water flow at the time of construction. However, to remedy the affected flows in Jim Creek, Northwest would direct some pumped groundwater to flow into Jim Creek downstream from the edge of the construction right-of-way. This discharge could mobilize sediment and generate turbidity.

Northwest modeled the severity-of-ill-effects[10] that could occur from a range of total suspended solids (TSS) concentrations and exposure durations on salmonids in Jim Creek. Based on Northwest's analysis, construction would yield TSS levels ranging between 10 milligrams per liter (mg/l) to 100 mg/l at a depth of 3 feet at any location in Jim Creek, to a distance of 3,200 feet downstream of the work area. WDOE (2017) reported an average concentration of suspended solids of 37 mg/l from June through September 2015 for the Nooksack River downstream from the Project near North Cedarville (Station 01A120). Therefore the level of turbidity in Jim Creek as it enters the North Fork Nooksack River would not be expected to adversely affect TSS levels in the river based on measured levels associated with flows entering from the upper confluence for the two waterbodies.

Construction of the Project would result in short-term minor impacts on waterbodies. Because Northwest would cross Jim Creek in dry conditions, impacts on water quality and aquatic species and habitat would be limited. Clearing and grading of riparian areas, in-stream trenching, dewatering operations, and backfilling could result in modification of aquatic habitat, increased sedimentation and water temperature, turbidity, and introduction of chemical contaminants such as fuel and lubricants. Section B.3.2 further discusses impacts of increased water temperature on aquatic species.

Clearing and grading of streambanks could expose soil to erosional forces and would reduce riparian vegetation along the cleared section of the waterbody. Use of heavy equipment for construction could cause compaction of near-surface soils, an effect that could result in increased runoff entering surface waters in the immediate vicinity of the construction right-of-way. Increased surface runoff could transport sediment into surface waters, resulting in increased turbidity levels and increased sedimentation rates in the receiving waterbody. To minimize construction-related sediment from entering waterbodies that are crossed, Northwest would install temporary and permanent erosion controls (e.g., silt fence, hay bales, slope breakers, etc.) in accordance with its ECRP and other applicable federal or state permit requirements.

---

10 Severity-of-ill-effects (SEV) scores range from 0 to 14, where an SEV of 0 indicates no effects, an SEV between 1 and 3 indicates behavioral effects, an SEV from 4 to 8 indicates sublethal effects, and an SEV from 9 through 14 indicates lethal and paralethal effects (Newcombe and Jensen 1996).

Our Procedures (sections V.B.2 and VI.B.1.a) require that extra work areas be at least 50 feet away from the water's edge and/or wetland boundaries, unless site-specific justification warrants an alternate arrangement. Due to the extensive excavation needed to replace the 30-inch-diameter pipeline at a depth deeper than the existing pipe, Northwest has requested authorization to locate 10 extra work areas within 50 feet of the edge of a waterbody or wetland. The work area locations and site-specific justifications for the work areas as alternate measures from our Procedures are provided in table 5. Based on our review of the documentation provided, we find the proposed modifications to our Procedures acceptable.

Table 5. Additional Temporary Workspaces within 50 Feet of a Waterbody or Wetland		
Temporary Extra Work Area (TEWA)	**Wetland/Waterbody**	**Rationale for Modification**
TEWA-01	Wetland D	TEWA-01 would be located in a hayfield 10 feet from emergent Wetland D. Maintaining a 50-foot setback here would severely reduce the utility of the TEWA.
TEWA-01 TEWA-02 TEWA-03	Stream EE	TEWA-01 and TEWA-03 would be located in hayfields and would not affect forest/shrub vegetation along Stream EE. TEWA-02 would be necessary to set a temporary bridge across Stream EE to provide access from TEWA-03 to TEWA-01. The bridge would be located in a narrow opening in a riparian hedgerow between the two TEWAs to minimize shrub/tree clearing. The three TEWAs would be within 10 feet of Stream EE.
TEWA-03 TEWA-04 TEWA-05	Stream E	TEWA-03 and TEWA-05 would be located in hayfields and would not affect forest/shrub vegetation. TEWA-04 is necessary to set a temporary bridge across Stream E to provide access between TEWA-05 and TEWA-03. The three TEWAs would be within 50 feet of a wetland or waterbody.
TEWA-05 TEWA-07	Wetland K Wetland G	TEWA-05 and TEWA-07 would be located in Wetlands K and G because the TEWAs provide ingress/egress to the construction right-of-way/Project area. In addition, they would provide areas for equipment and material staging at the north end of the Project. The two TEWAs would be within 50 feet of Stream E.
TEWA-08 TEWA-09 TEWA-10	Wetland A Wetland C Wetland G Stream B Stream D Stream I	To safely and efficiently lower the 30-inch-diameter pipeline to a top-of-pipe elevation of 215 above mean sea level, Northwest states that a 320-foot-wide construction right-of-way is needed based on engineering and construction requirements. Due to the extent of the wetland and waterbody features that are present within the floodplain of the North Fork Nooksack River in the Project area, it would not be possible to avoid the wetlands or waterbodies or to set the TEWAs 50 feet away from them.
TEWA-11	Jim Creek/ Stream D	TEWA-11 would be located across Jim Creek/Stream D on the private access road to allow installation of a temporary bridge and dam if Jim Creek/Stream D is flowing at the time of construction. A temporary bridge would be set within TEWA-11 to avoid a ford crossing of the flowing stream. Additionally, a temporary sandbag/coffer dam (or other similar material/device) would be set within TEWA-11 to protect the Project area from potential flooding events.

Because the Project is within the North Fork Nooksack River floodplain where shallow groundwater occurs, the open trench would be expected to fill with water during construction. To allow workers to weld and test the pipeline segments in a dry condition, Northwest would use the Project's Groundwater Management/Dewatering System to draw down the water table to a level below the trench. A portion of the groundwater produced by the dewatering program would be discharged into Jim Creek downstream of the work area to augment stream flow in the

Creek, with the remainder being discharged to the North Fork Nooksack River. Water would be discharged in a manner that prevents scour, erosion, and sedimentation, in accordance with Northwest's ECRP and the Project's anticipated NPDES permit conditions.

Following construction, the stream bed and banks of Jim Creek would be restored to pre-construction contours, the banks stabilized with a rock toe, coir cloth lifts, and native vegetation plantings, and temporary sediment barriers would be installed. As Jim Creek supports coldwater fisheries (see section 3.4), the trench would be backfilled with clean gravel or spoil excavated from the stream bottom. These measures would minimize changes to the in-stream habitat at the crossing site. Northwest has prepared a site-specific restoration plan for Jim Creek -- the *Jim Creek Restoration and Habitat Enhancement Plan*.[11] This Plan aims to restore the approximate historic channel morphology of the creek channel as it crosses the Project right-of-way to the morphology upstream and downstream of the crossing and to enhance the habitat and ecological function of the area impacted by the Project. As part of the plan, Northwest proposes to install elements of large woody debris throughout the riparian area disturbed by construction and to reseed and revegetate this area with native plant and tree species.

Accidental spills and leaks of hazardous materials associated with vehicle refueling or maintenance, and the storage of fuel, oil, and other fluids could contaminate a waterbody downstream of the release point and can have an immediate effect to aquatic resources. To prevent or minimize potential impacts associated with spills or leaks of hazardous liquids, Northwest would implement procedures from its Spill Plan including storing hazardous materials in upland areas at least 100 feet from waterbodies and wetlands. Implementation of Northwest's Spill Plan would adequately address the storage and transfer of hazardous materials and petroleum products, and the appropriate response in the event of a spill.

Long-term impacts associated with pipeline operations and maintenance would be relatively minor. Northwest would stabilize streambanks within 24 hours of completion and, in accordance with our Procedures, revegetate the disturbed work areas following installation of the pipeline. Post-construction vegetation maintenance would be limited to the permanent rights-of-way pursuant to the ECRP.

Northwest would not significantly or permanently affect any designated water uses; it would bury the new pipeline approximately 20 feet beneath the bed of Jim Creek, implement erosion controls, and restore and enhance riparian vegetation, the streambanks, and streambed contours to pre-construction conditions. Therefore, we conclude that the Project would not have a significant impact on surface waters.

2.3 Wetlands

Wetlands are areas that are inundated or saturated by surface or groundwater at a

---

[11] Northwest's *Jim Creek Restoration and Habitat Enhancement Plan* was filed to the docket on July 27, 2017 and can be accessed under CP17-133 at https://elibrary.ferc.gov/idmws/search/fercgensearch.asp. See Accession number 20170717-5094.

frequency and duration sufficient to support, and normally do support, a prevalence of wetland vegetation adapted for life in saturated soil conditions. Wetlands can be a source of substantial biodiversity and serve a variety of functions that include providing habitat for wildlife, recreational opportunities, flood control, and for naturally improving water quality.

Wetlands that would be affected by the Project are regulated at the federal and state levels. On the federal level, the USACE has authority under Section 404 of the Clean Water Act to review and issue permits for activities that would result in the discharge of dredge or fill material into waters of the United States, including wetlands. Section 401 of the Clean Water Act requires that proposed dredge or fill activities under Section 404 be reviewed and certified by the designated state agency (in this case, the WDOE) to ensure that the Project would meet state water quality standards.

Northwest performed a 300-foot-wide field wetland delineation of the Project area in September and October 2016 (The Watershed Company 2017). Project construction would temporarily impact about 5.72 acres of wetlands (3.23 acres of palustrine emergent, 0.01 acre of palustrine scrub/shrub, and 2.48 acres of palustrine forested); operations would not permanently fill or convert any wetlands (see table 6). No wetlands would be affected from the use of access roads. No aboveground facilities, access roads, or contractor/storage yards would impact wetlands; however, a portion of wetland K would be located within TEWA 05. Descriptions of the wetland habitats the Project would impact are discussed below.

Table 6.
Wetlands Affected by the Project

Wetland Identifier	Wetland Type (Cowardin Classification)1	Length of Crossing (feet)	Temporary Construction Impact (acre)	Permanent Impact (acre)
Wetland A	PEM/PSS	56	0.35 PEM 0.01 PSS	0
Wetland C	PEM/PFO/PSS	215	0.31 PEM 0.16 PFO	0
Wetland G	PEM/PFO	400	2.20 PEM 2.32 PFO	0
Wetland K	PEM	Not applicable/in TEWA 05	0.37 PEM	0
		Total	**5.72** (3.23 PEM 2.48 PFO 0.01 PSS)	**0**

[1] PEM – palustrine emergent
PSS – palustrine scrub-shrub
PFO – Palustrine forested

Palustrine Emergent Wetlands: These wetlands in the Project area are dominated by reed canarygrass, soft rush, creeping buttercup, and other meadow grasses. Small-fruited bulrush, various sedges, and cattails occasionally appear in the more frequently flooded areas.

Palustrine Scrub/Shrub Wetlands: These wetlands are dominated by willows, salmonberry, twinberry, with lady fern and creeping buttercup in the groundcover. Himalayan blackberry is prevalent in the disturbed areas adjacent to the existing, maintained pipeline easement, and patches of the invasive species Japanese knotweed occur along Jim Creek.

Palustrine Forested Wetlands: These wetlands are dominated by red alder and black cottonwood trees, along with red-osier dogwood, salmonberry, swordfern, stink currant, with piggy-back plant, common ladyfern, and creeping buttercup in the understory of some forested riparian zones and wetlands. Sitka spruce and western redcedar may also be present in wetland areas that are less frequently inundated and/or saturated.

All wetlands in the Project area scored moderately for water quality and hydrologic function because all of the wetlands are in a basin that contain total maximum daily loads (i.e., a water cleanup plan for impaired waterbodies). In addition, the Project-area wetlands are proximate to the North Fork Nooksack River, a waterbody that regularly floods and has some segments on WDOE's water quality 303(d) list. All wetlands ranged from moderate-to-high for habitat function because the wetlands are situated in the floodplain corridor of the Nooksack River in a relatively less-developed landscape. Wetlands that scored higher for habitat generally scored higher because they contained more diverse vegetation and hydrologic regime structures.

Northwest would implement its ECRP (which incorporate our Procedures) but has requested modifications from section VI A.3 of our Procedures, which limits the width of the construction right-of-way through wetlands to 75 feet; and section VI.B.1a, which requires workspaces to be at least 50 away feet from wetlands (as discussed above and shown in table 5). According to Northwest, modifications to these provisions are warranted due to Project-specific engineering constraints and construction requirements. Because of the high groundwater levels in the North Fork Nooksack River floodplain and the coarse pervious substrate characteristics, Northwest has also requested a modification of our Procedures (VI.C.1) to eliminate the installation of trench plugs in the trench as being unnecessary to maintain wetland hydrology or for avoiding draining wetlands. We have reviewed Northwest's request and find these modifications acceptable.

Northwest would, however, implement measures from our Procedures to minimize impacts on wetlands, including:

- cutting vegetation just aboveground level, leaving existing root systems in place to allow reestablishment from sprouting, and removing the vegetation from the wetland for disposal;
- limiting tree stump removal and grading activities to directly over the trenchline in wetlands, and not grading or removing stumps or root systems from the rest of the construction right-of-way unless the Chief Inspector and EI determine that safety-related construction constraints require these activities on the working side of the construction right-of-way;
- segregating up to the top 1 foot of topsoil from the area disturbed by trenching, except in areas where standing water is present or soils are saturated. The segregated topsoil would be restored to its original location immediately after backfilling is complete; and

- using low-ground-weight construction equipment or operating normal equipment on prefabricated equipment mats or similar measures where standing water or saturated soils are present, or if construction equipment causes ruts or mixing of the topsoil and subsoil in wetlands.

The impacts on wetlands would be temporary because all wetlands impacted would be restored to their original contours, reseeded or replanted with appropriate species, and the hydrology would be maintained. There would, however, be some long-term temporal loss of wetland habitat and water quality function as a result of removal of riparian shade vegetation and increased transport of sediments. Emergent and scrub/shrub wetland species would be expected to return to preconstruction conditions within 5 years, while impacts on forested wetland species would be long-term, as these areas could take 30 years to reach a maturity level of the surrounding vegetation. As mentioned above, in saturated wetlands, construction equipment would work on timber mats to minimize impacts from rutting and soil mixing; topsoil segregation would not be feasible.

After construction is completed, Northwest would seed the wetlands as specified in its ECRP, with seed mixtures previously used in other projects in western Washington that have been approved by the USACE, WDOE, and Whatcom County. Additionally, Northwest would plant native shrubs or trees at waterbodies associated with wetlands, where appropriate, to enhance wetland conditions and hasten the recovery of the forested wetland systems. Finally, Northwest would compensate for long-term impacts on forested wetlands using the Lummi Nation Mitigation Bank and/or by participating with the Nooksack Indian Tribe and Whatcom County to implement potential mitigation project(s) in the Project area. Northwest has also prepared a restoration and enhancement plan for Jim Creek. With the mitigation measures that Northwest would employ during construction and restoration, as well as any additional compensatory mitigation that may be required by the county, state, or the USACE, we conclude Project impacts on wetlands would be minimized to the extent practicable.

3. Vegetation, Fisheries, and Wildlife

3.1 Vegetation

Four general vegetation types are found in the Project area and include forest-woodland, riparian/wetlands, agricultural areas, and developed (i.e., urban/mixed environs) areas. We have already discussed wetlands in section B.2.3, and impacts on agriculture and developed areas are discussed in section B.4.1; therefore, this section will focus on forested vegetation impacts.

Most vegetation within the Project area is represented by mixed conifer-hardwood forest (Westside Lowlands Conifer-Hardwood Forest) and wetlands. Dominant species found in this mixed conifer-hardwood forest include western hemlock and Douglas-fir on upland areas with bigleaf maple and black cottonwood as deciduous components. Sitka spruce, western redcedar and grand fir are also present in forested habitat areas (The Watershed Company 2016b). Large trees occur in the Project area, including conifer trees with 20- to 29-inch diameter at breast height (dbh) and hardwood trees with dbh greater than 30 inches. The canopy is closed, with an estimated 75 percent cover on average.

In total, the Project would impact about 6.70 acres of upland forest vegetation and 3.42 acres of riparian shade vegetation during construction and about 0.14 acre of upland forest vegetation; no riparian shade vegetation would be affected during operation of the Project. Additionally, construction would affect 5.13 acres of agricultural land and 5.07 acres of developed land, which includes areas that are graveled or fenced (e.g., roads and mainline valve sites). Once construction is complete, areas of agricultural and developed lands would be maintained in its current vegetation cover. Construction impacts on vegetation, while not permanent, would be long term, as these areas could take decades to revegetate and return to pre-construction condition. Because Northwest would be replacing the existing 30-inch-diameter pipeline deeper and within the existing permanent right-of-way, permanent forest impacts would be limited. Therefore, while long-term impacts on forested vegetation would be expected, we believe permanent impacts would be minimized to the extent practicable. Disturbed areas would be revegetated and monitored for at least 2 years following construction, until revegetation is deemed successful. Corrective actions would be taken to ensure successful restoration of vegetation.

Northwest requests a modification from section IV.F.4. of the Plan which states that if wood chips are used as mulch, no more than 1 ton/acre should be used and the equivalent of 11 lbs/acre available nitrogen should be added. Northwest requests a modification because forest slash, including incidental wood chips, would be generated during right-of-way clearing, and the forest slash and large woody debris would be scattered or redistributed across the right-of-way during restoration efforts in accordance with the requirements of the Forest Practices Act rules pertaining to post-harvest site preparation (Washington Administrative Code [WAC] 222-30-090) and slash disposal (WAC 222-30-100). We find this modification to be acceptable.

Japanese knotweed (a non-native weed species that Whatcom County requires control of) is prevalent throughout the Project area, including the North Fork Nooksack River floodplain and Northwest's existing permanent easement. Additionally, two other noxious weeds, Himalayan blackberry and reed canary grass, are present in the Project area, but Whatcom County does not require their control.

Northwest would implement its ECRP, which includes revegetating disturbed areas with seed mixes that have been approved by the USACE, WDOE, and Whatcom County. Northwest would also implement methods to control noxious weeds, including cleaning construction equipment and vehicles prior to them moving onto the right-of-way, replanting with appropriate seed mixes, and monitoring and controlling weeds after construction, with special procedures for vegetation clearing and grading in areas with Japanese knotweed. We conclude with implementation of these measures, impacts on vegetation would be minimized and not significant.

3.2 Fisheries

Northwest's Project would cross only one waterbody, Jim Creek; however, the Project area is bounded to the south by the North Fork Nooksack River, which has been designated by the State as Core Salmonid Habitat for aquatic life use. Jim Creek's main source of flow during high water events comes from the North Fork Nooksack River. Upstream segments of Jim Creek only flow during flood events, while the downstream segment, including the Project area, flows

perennially. The North Fork Nooksack River provides habitat for coldwater anadromous, coldwater resident, and native non-game fish species. No warmwater habitat or fisheries occur in the Project area. Representative game fish species with potential habitat in the North Fork Nooksack River and Jim Creek include Chinook, coho, chum, pink, and sockeye salmon; steelhead, coastal cutthroat, bull, and Dolly Varden trout; mountain whitefish; longnose and Nooksack dace; and northern pickminnow. Impacts on federally and state listed fish species are discussed in section B.3.5, below.

Construction of the Project would increase turbidity immediately downstream of the Project area due to trenching and groundwater dewatering activities (see section B.2.2); result in fish mortality; remove riparian vegetation (which could affect water temperature); and have adverse effects from limited application of herbicides to control noxious weeds near waterbodies. The Project could also result in an accidental release of petroleum products into the water. All of these activities could adversely affect aquatic organisms.

Northwest proposes to conduct in-stream construction using a dry-ditch method during July, August, and September, which is within WDFW recommended in-water work windows. Additionally, Northwest would implement its ECRP, which incorporates FERC's Plan and Procedures, during construction to minimize impacts on waterbodies and fisheries. Northwest has also prepared a plan to restore and enhance the portion of Jim Creek that would be affected by construction (see the Jim Creek Restoration and Habitat Enhancement Plan) and has developed a Fish Exclusion and Relocation Plan[12] for excluding fish from the area of Jim Creek that would be affected by construction, and for capturing and relocating any fish within the aquatic construction impact area. In addition, Northwest has committed to:

- discharging a portion of groundwater into Jim Creek to provide in-stream flows downstream from the Project area;
- discharging a portion of groundwater into the North Fork Nooksack to compensate for decreased hyporheic exchange during construction;
- installing large woody debris in Jim Creek and on its banks to provide shade and habitat complexity;
- replanting riparian areas up to 25 feet on either side of waterbodies according to our Procedures;
- compensating for long-term wetland impacts to forested wetlands through the use of the Lummi Nation Mitigation Bank and/or by participating with the Nooksack Indian Tribe and Whatcom County to implement potential mitigation project(s) in the Project area, where appropriate and available;
- implementing the Fish Exclusion and Relocation Plan to salvage and relocate fish from aquatic habitats affected by groundwater removal;
- lowering the rock "sill" at the Jim Creek inlet;

---

[12] Northwest's Fish Exclusion and Relocation Plan is provided as an attachment to the Biological Assessment, included as Appendix C to this EA.

- washing all equipment offsite prior to entering the construction right-of-way to avoid introduction of noxious weeds or nuisance aquatic organisms; and
- implementing its Spill Plan.

We conclude Northwest's implementation of these measures would minimize impacts on fisheries to the extent practicable.

Essential Fish Habitat

In 1996, new habitat conservation provisions were added to the Magnuson-Stevens Fishery Conservation Management Act (MSFCMA) that mandated the identification of essential fish habitat (EFH) for managed species. EFH is defined by Congress as "those waters and substrate necessary to fish for spawning, breeding, feeding, or growth to maturity." The MSFCMA was established, along with other goals, to promote the protection of EFH in the review of projects conducted under federal permits, licenses, or other authorities that affect or have the potential to affect such habitat.

Section 302 of the MSFCMA establishes eight regional fishery management councils. The Pacific Fishery Management Council is responsible for the creation of management plans for fishery resources in federal waters off the coast of Washington. The Pacific Fishery Management Council has developed a fishery management plan (the Pacific Coast Salmon Plan) to address EFH for Pacific salmon (Chinook, coho, and pink) in the Project area.

Federal agencies that authorize, fund, or undertake activities that may adversely impact EFH must consult with the NMFS. For purposes of reviewing this Project under NEPA, the FERC is the lead federal agency. Although absolute criteria have not been established for conducting EFH consultations, NMFS recommends consolidating EFH consultations with interagency coordination procedures required by other statutes, such as NEPA and the ESA to reduce duplication and improve efficiency. As such, FERC staff proposes to incorporate EFH consultations for the Project with the interagency coordination procedures required under the ESA and NEPA. Thus, we are requesting that NMFS consider this EA and the Biological Assessment (appendix C) as our EFH Assessment. With issuance of this EA, we are requesting initiation of EFH consultation.

Chinook Salmon

Chinook salmon is a federally threated species. Its habitat and impacts from the Project are discussed in the special status species section of this EA (section B.3.5 below).

Coho Salmon

Coho salmon use the North Fork Nooksack River mainstem in the vicinity of the Project for migration and juvenile rearing. Spawning occurs in small accessible tributaries of the river. Coho begin their spawning migration as 3-year-olds in late summer and fall, and begin spawning in mid-winter. Juveniles rear for about one year in freshwater before migrating in the spring to the ocean. Coho generally spend two growing seasons within the ocean before migrating back to their natal stream to spawn.

Pink Salmon

Pink salmon in the Nooksack Sub-basin are a native stock with wild production and are known to spawn in the mainstems of the three forks of the Nooksack River, as well as accessible tributaries. Spawning generally occurs upstream from the Project area, but may also occur in the immediate vicinity of the Project. Pink salmon begin their spawning migrating in July, and possibly June. Pink salmon live for two years in salt water before migrating back to their natal stream to spawn.

Potential effects to EFH

Adverse effects to Pacific Coast Salmon EFH include the direct or indirect physical, chemical, or biological alterations of the waters or substrate and loss of, or injury to, benthic organisms, prey species and their habitat, and other ecosystem components, if such modifications reduce the quality or quantity of EFH. The Project would involve the direct disturbance of approximately 320 linear feet of Jim Creek; as such, the Project ***may adversely affect*** the Pacific Coast Salmon EFH. As described above, mitigation to eliminate, minimize, and mitigate impacts on fisheries in general and would also reduce impacts on EFH species. We believe that the mitigation measures above would minimize impacts on EFH to less than significant levels. In addition, we would consider any conservation recommendations the NMFS may make in its review of our EFH assessment.

3.3 Wildlife

The general wildlife habitat types in the Project area are wetlands, mixed conifer-hardwood forest, agricultural, developed areas, and open water. Approximately 173 species of wildlife may occur in the Project area. The mixed conifer-hardwood forest and wetlands make up a large percentage of habitat in the Project area, and provides habitat for amphibian, reptiles, birds (including migratory birds), and mammals, as well as fish, which is discussed further in section 3.4. Representative wildlife species within the Project area include black-tailed deer, Roosevelt elk, cougar, black bear, beaver, raccoon, cottontail rabbit, ruffed grouse, ring-necked pheasant, and various forms of ducks and geese.

Project construction would largely affect forest habitat (42 percent, including 6.70 acres of mixed conifer-hardwood forest and 2.48 acres of forested wetlands) and areas with altered vegetation (42 percent including 5.13 acres of agricultural and 5.07 acres of developed lands). The Project would also affect 3.23 acres (13 percent) of herbaceous wetland habitat, of which the majority is within Northwest's maintained permanent easement, as well as 0.72 acres of open water habitat (3 percent) as a result of installing the pipeline across Jim Creek and constructing a bridge crossing and cofferdam at TEWA 11.

During construction, larger and more mobile animals would leave activity sites in favor of nearby suitable habitats. Noise from construction activities could also result in wildlife leaving the Project area. These individuals are likely to return after construction activities are complete and/or appropriate vegetation has become reestablished in the Project area. Some small mammals, reptiles, and amphibians could suffer mortality as a direct result of construction. Other individuals may be permanently displaced or perish due to increased competition or other effects of being forced into sub-optimal habitats. However, the populations of affected species

are expected to return to previous levels within a short time after construction.

Habitat conversion affects wildlife species differently depending on each species' habitat preferences. Forest-dwelling species would experience long-term or permanent effects, as early successional non-woody vegetation would replace the forested wetland and upland habitats removed from the work area. The temporary construction work area would be allowed to revegetate with forest vegetation (long-term-effect), while the permanent 50-foot-wide right-of-way would continue to be kept clear of trees for operations and maintenance activities (permanent effect).

We do not believe construction would adversely affect the distribution or regional abundance of wildlife species given the amount and distribution of similar habitat types available in the immediate Project area. Once construction is complete, the construction work areas would be stabilized and revegetated in accordance with Northwest's ECRP. Work areas revegetated with herbaceous and shrub cover would provide food, cover, and breeding habitat for species that use open areas. As the pipeline would be lowered within Northwest's existing pipeline right-of-way, we conclude the Project's impacts on wildlife would be minimized to the extent practicable.

3.4 Migratory Birds

Migratory birds are protected under the Migratory Bird Treaty Act and Executive Order 13186, which serve to protect migratory birds from adverse impacts. The executive order was enacted, in part, to ensure that environmental analyses of federal actions evaluate the impacts of actions and agency plans on migratory birds. It also states that emphasis should be placed on species of concern, priority habitats, and key risk factors, and it prohibits the take of any migratory bird without authorization from the USFWS. The destruction or disturbance of a migratory bird nest that results in the loss of eggs or young is also a violation of the Migratory Bird Treaty Act.

The USFWS established Birds of Conservation Concern lists for various regions in the country in response to the 1988 amendment to the Fish and Wildlife Conservation Act, which mandated the USFWS to identify migratory nongame birds that, without additional conservation actions, were likely to become candidates for listing under the ESA. The Project falls within Bird Conservation Region (BCR) 9 – Great Basin.

Migratory birds of conservation concern with the potential to occur within the Project area include bald eagles, black swift, eared grebe, Lewis's woodpecker, peregrine falcon, and willow flycatcher. Removal of small amounts of native habitat during construction could potentially result in inadvertent effects to nesting adults, nests, and eggs, if present. Northwest would clear forested areas from mid-September through March, which would be outside the peak of breeding (beginning June 19) for many species. Conducting forest clearing between mid-September and March would avoid direct take of 20 bird species that are known to breed in forested habitats in the Project area. Additionally, by staying within its existing right-of-way, Northwest would reduce impacts on tree-nesting species. The nearest known bald eagle nest is 2.9 miles southwest of the Project and would not be adversely impacted by the Project. Therefore, we believe Northwest's impacts on migratory birds would not be significant.

3.5 Special Status Species

Special status species are those species for which state or federal agencies afford an additional level of protection by law, regulation, or policy. Special status species include federally listed species protected under Section 7 of the ESA, species proposed or candidates for listing by the USFWS or NMFS, and those species that are state-listed as threatened, endangered, or otherwise considered sensitive. Section 7(a)(2) of the ESA requires the Commission to ensure that any action it authorizes, funds, or carries out would not jeopardize the continued existence of federally listed or proposed listed species, or result in the adverse modification or destruction of critical habitat for federally listed and proposed species. As the lead federal agency for the North Fork Nooksack Lowering Project, FERC is responsible for ESA consultation with the USFWS and NMFS to determine whether any proposed or federally listed species, or critical or proposed critical habitat may occur in the Project area, and to determine the proposed action's potential impacts on these species and critical habitat. Species classified as candidates for listing under the ESA do not currently carry regulatory protection but are typically considered during our assessments as they may be listed in the future. Similarly, species protected under state statutes do not carry regulatory protection under the ESA, but impacts are reviewed if the applicable agency indicates its potential presence in the Project area during consultation.

Northwest utilized the USFWS' Information for Planning and Conservation system and the WDFW's interactive computer mapping system, SalmonScape, to determine whether any federally or state-listed threatened or endangered species, species of concern, or designated critical habitats occur in the Project area. Seven species listed under the ESA and within the jurisdiction of the USFWS have the potential to occur within Whatcom County and the Project area. Two species listed under the ESA within the jurisdiction of NMFS also have the potential to occur in the Project area. Table 7 summarizes the federally listed species that may occur in the Project area, their preferred habitat, and our determination of effect. Our biological assessment (appendix C) contains a more detailed discussion of these elements. Critical habitat for the Chinook salmon, steelhead, and bull trout have been designated within the North Fork Nooksack River in the vicinity of the Project area. No critical habitat has been designated within Jim Creek.

State-listed species of concern that have been identified by the state agencies as having potential habitat in the Project area are listed in table 7 and discussed in section B.3.5.2, below.

Table 7.
Federally Listed, State-Listed, and Other Special Status Species

Common Name (*Scientific Name*)	Federal Status[1]	State Status[2]	Habitat Description	Determination of Effect/Impact
Mammals				
Gray wolf *Canis lupis*	Endangered	Endangered	Gray wolves are habitat generalists that predate usually on large ungulates, including elk), mule deer, white-tailed deer, and moose, where available, and occasionally other, smaller prey such as ground squirrels, snowshoe hare and grouse (Larsen and Ripple 2006). Wolves inhabit areas where human-caused mortality rates are not excessive (USFWS 2013a).	The Project would have ***no effect*** on the gray wolf. Presence of a wolf in the Project area is highly unlikely based on available information about historical wolf occurrence in Whatcom County, distance to habitats known to be occupied by wolf packs and limited potential prey species in the region surrounding the Project.
North American wolverine *Gulo gulo luteus*	Proposed Threatened	Candidate	Wolverines occur within a wide variety of alpine, boreal and arctic habitats, including boreal forests, tundra and western mountains in the United States and Canada (USFWS 2011c). Wolverines primarily scavenge carrion, but also consume small animals, birds, fruits, berries, and insects. Persistent, stable snow greater than 5 feet deep appears to be a requirement for natal denning as it provides security for offspring and buffers cold winter temperatures. At the southern limits of the species' range, wolverines' distribution is limited to higher elevations where temperatures are colder and sufficient snow cover persists.	The Project would have ***no effect*** on the North American wolverine**.** Presence of a wolverine in the Project area is highly unlikely based on available information about the current distribution of wolverines in Washington, as well as lack of suitable habitats in the region surrounding the Project to support wolverines except possibly during dispersal.
Birds				

Table 7.
Federally Listed, State-Listed, and Other Special Status Species

Common Name (*Scientific Name*)	Federal Status[1]	State Status[2]	Habitat Description	Determination of Effect/Impact
Marbled murrelet *Brachyramphus marmoratus*	Threatened	Endangered	The marbled murrelet nests primarily in coastal, old growth coniferous forests, characterized by large trees, multi-storied stands and moderate-to-high canopy coverage from Alaska to Monterey Bay, California (USFWS 2011a). Trees within suitable habitat must have large branches or deformities, such as high, moss-covered branches or branches with growths of dwarf mistletoe, which serve as nest platforms (Binford et al. 1975; Marshall 1988a and 1988b; Naslund 1993; USFWS 1996). In Washington, the USFWS considers a coniferous tree to provide potential murrelet nesting opportunities if at least one nesting platform that is at least 4 inches wide and 33 feet above the ground, with horizontal and vertical cover to protect the nest site occurs within 55 miles of marine foraging habitats (USFWS 2012). Generally, forests that provide suitable nesting habitat and nest trees require 200 to 250 years to develop.	The Project is ***not likely to adversely affect*** the marbled murrelet**.** On-site surveys conducted during September 2016. Potential nesting habitat in the area is marginal (Hamer Environmental 2017; Raphael et al. 2016) and nesting by murrelets is unlikely. Forested habitat in the Project area is dominated by deciduous forest, and potential nesting habitat in coniferous trees is isolated. Northwest would not remove potential nesting habitat during the breeding season; construction activity would generally occur during daylight hours, which would minimize disturbance effects to marbled murrelets, if present in the vicinity of the Project.
Streaked horned lark *Eremophila alpestris strigata*	Threatened	Endangered	The streaked horned lark migrates between Oregon and Washington with breeding populations found in the Puget Sound lowlands, Columbia River/coastal Washington, and the Willamette Valley in Oregon from late March to early August. In Washington, nesting habitats include open grasslands, beaches and dredge spoils islands with sparse vegetation and agricultural fields, with individuals showing preference to bare ground compared to vegetation several inches tall (Stinson 2005).	The Project would have ***no effect*** on the streaked horned lark**.** Breeding Bird Survey route number 89027 passes within 2.5 miles of the Project area; the surveyed area includes floodplains and riparian habitats associated with the North Fork Nooksack and Middle Fork Nooksack Rivers. No horned larks of any subspecies have been reported. Further, there are no native prairies or open areas with pastures, grasslands or bare ground in the Project area that might provide suitable habitats for streaked horned larks. No currently occupied breeding locations have been reported in Whatcom County (Stinson 2016). Presence of a streaked horned lark in Project area is highly unlikely based on available information about the historical species' occurrence in Whatcom County.

Table 7.
Federally Listed, State-Listed, and Other Special Status Species

Common Name (*Scientific Name*)	Federal Status[1]	State Status[2]	Habitat Description	Determination of Effect/Impact
Yellow-billed cuckoo *Coccyzus americanus*	Threatened	Candidate	The yellow-billed cuckoo is found within low- to moderate-elevation areas west of the crest of the Rocky Mountains in Canada, Mexico and the western United States. Yellow-billed cuckoos are considered a riparian obligate species and are usually found in large tracts of cottonwood/willow habitats with dense sub-canopies, but may also be found in urban areas with tall trees (USFWS 2007).	The Project would have ***no effect*** on the yellow-billed cuckoo. Historic accounts of yellow-billed cuckoos include reports from Washington, with occurrences in the Puget Sound lowlands and lower Columbia River although last confirmed breeding records in the State are from the 1930s (USFWS 2011b). More recent surveys were conducted in Okanogan and Yakima counties to check locations where the species had been sighted but no cuckoos were detected. USFWS (2011b) suggests that yellow-billed cuckoos may be extirpated from Washington. Presence of a yellow-billed cuckoo in the Project area is highly unlikely based on available information about the historical species' occurrence in Whatcom County.
Amphibians				
Oregon spotted frog *Rana pretiosa*	Threatened	Endangered	Oregon spotted frogs inhabit emergent wetland habitats in forests, and were historically associated with prairie lakes in the Puget lowlands. They breed in shallow pools with grasses, sedges, and rushes that are not dominated by reed canarygrass near or connected with flowing water (USFWS 2011e). In lower elevations of Washington and Oregon, breeding occurs during February and March (Hallock 2013), and at higher elevations breeding occurs in late May or early June (Leonard et al. 1993; Bohannon et al. 2016).	The Project is ***not likely to adversely affect*** the Oregon spotted frog**.** Wetland surveys conducted from 2011 to 2013 within the Nooksack River-Frontal Bellingham Bay 5th field watershed was occupied by Oregon spotted frogs. Additionally there are no records of spotted frog occurrences in the immediate vicinity of the Project area. However, the Project area is hydrologically connected to Black Slough on the South Fork Nooksack, which is occupied by the Oregon spotted frog; and Oregon spotted frogs occur in two 5th field watersheds that are adjacent to the Nooksack River-Frontal Bellingham Bay 5th field watershed within which the Project is located.
Fish				
Bull trout *Salvelinus confluentus*	Threatened	Candidate	Bull trout require complex forms of cover including large woody debris, boulders, and pools and undercut banks (WDFW 2000). Spawning generally occurs during late summer and early fall, utilizing loose, clean gravel substrates in low gradient streams. Depending on the life history form, rearing and overwintering habitat vary but bull trout	The Project is ***likely to adversely affect*** bull trout. Bull trout may be present in Jim Creek and in the North Fork Nooksack River in the Project area and may be affected from declining surface water levels during dewatering activities. The Project would also temporarily restrict movement of bull trout in Jim Creek and may temporarily alter hyporheic exchange with the North Fork Nooksack River which could affect habitat suitability features that

Table 7.
Federally Listed, State-Listed, and Other Special Status Species

Common Name (*Scientific Name*)	Federal Status[1]	State Status[2]	Habitat Description	Determination of Effect/Impact
			still require cool clean water with insects, macro-zooplankton, and small fish for larger adults to consume. Critical habitat for bull trout in the Coastal Puget Sound Distinct Population Segment (DPS) has been designated within the North Fork Nooksack River in the vicinity of the Project. Critical habitat has not been designated in Jim Creek.	could include surface water temperatures, exchange of nutrients with groundwater, and amounts of habitats available in surface waters. Juvenile bull trout may be salvaged from surface water during construction with some risk of mortality during capture and/or mortality in storage containers or when released into alternative habitats. Mortality of juvenile bull trout would affect a small portion of the population present within the Nooksack River Sub-basin. The Project is **likely to adversely affect** designated critical habitat for Coastal-Puget Sound DPS bull trout because the Project is within the riparian zone of critical habitat associated with the North Fork Nooksack.
Chinook salmon (Puget Sound Evolutionarily Significant Unit [ESU]) *Oncorhynchus tshawytscha*	Threatened	Candidate	Spawning bed characteristics utilized by chinook vary considerably. Depths can range from a few centimeters to several meters, and can be located in streams from a couple of meters wide to sections of larger rivers like the Columbia River in Oregon. Preferred water depth ranges vary widely for chinook during different phases of their life cycle and depending upon their race. Critical habitat was designated for the Puget Sound ESU and included all marine, estuarine and river reaches accessible to listed Chinook, as well as the adjacent riparian vegetation, including accessible reaches in the Nooksack Sub-basin (NMFS 2005a) including the North Fork Nooksack River.	The Project is ***likely to adversely affect*** the chinook salmon. Chinook salmon may be present in Jim Creek and in the North Fork Nooksack River in the Project area and may be affected from declining surface water levels during dewatering activities. The Project would also temporarily restrict movement of Chinook salmon in Jim Creek and may temporarily alter hyporheic exchange with the North Fork Nooksack River which could affect habitat suitability features that could include surface water temperatures, exchange of nutrients with groundwater, and amounts of habitats available in surface waters. Juvenile Chinook salmon may be salvaged from surface water during construction with some risk of mortality during capture and/or mortality in storage containers or when released into alternative habitats. Mortality of juvenile chinook salmon would affect a small portion of the population present within the Nooksack River Sub-basin. The Project is ***likely to adversely affect*** designated critical habitat for Chinook salmon with the Puget Sound ESU because the Project is within the riparian zone of

Table 7.
Federally Listed, State-Listed, and Other Special Status Species

Common Name (*Scientific Name*)	Federal Status[1]	State Status[2]	Habitat Description	Determination of Effect/Impact
				critical habitat associated with the North Fork Nooksack River.
Steelhead (Puget Sound DPs) *Oncorhynchus mykiss*	Threatened	-	Steellhead are anadromous rainbow trout that utilize coastal streams and tributaries to the Columbia River. Steelhead require cool, clear, well-oxygenated streams for spawning with suitable gravels and water flows (Pauley et al. 1986). Critical habitat for steelhead in the Puget Sound steelhead DPS has been designated within the North Fork Nooksack in the vicinity of the Project. Critical habitat has not been designated in Jim Creek.	The Project is ***likely to adversely*** affect Puget Sound DPS steelhead. Steelhead may be present in Jim Creek and in the North Fork Nooksack River in the Project area and may be affected from declining surface water levels during dewatering activities. The Project would also temporarily restrict movement of steelhead in Jim Creek and may temporarily alter hyporheic exchange with the North Fork Nooksack River which could affect habitat suitability features that could include surface water temperatures, exchange of nutrients with groundwater, and amounts of habitats available in surface waters. Juvenile steelhead may be salvaged from surface water during construction with some risk of mortality during capture and/or mortality in storage containers or when released into alternative habitats. Mortality of juvenile steelhead would affect a small portion of the population present within the Nooksack River Sub-basin. The Project is ***likely to adversely affect*** designated critical habitat for steelhead within the Puget Sound DPS because the Project is within the riparian zone of critical habitat associated with the North Fork Nooksack River.
River lamprey *Lampetra ayresi*	Species of Concern	Candidate	Little is known about river lamprey biology or its distribution in Washington, but historically likely occurred in most major rivers, including rivers throughout Puget Sound (Wydoski and Whitney 1979 USFWS, 2004). It is suspected that river lamprey spawn in small nests dug in the sand and gravel at the upstream end of riffle habitat (Wydoski and Whitney 1979; USFWS 2004). River lamprey may possibly occur in the North Fork Nooksack and Jim Creek.	The Project **would not significantly impact** river lamprey. Northwest proposes to conduct in-stream construction in July, August, and September, which is within the WDFW recommended in-water work windows. Additionally, Northwest would implement its ECRP during construction to minimize impacts on waterbodies and fisheries.

Table 7.
Federally Listed, State-Listed, and Other Special Status Species

Common Name (*Scientific Name*)	Federal Status[1]	State Status[2]	Habitat Description	Determination of Effect/Impact

Notes:
1 Species of Concern is an informal term. It is not defined in the federal Endangered Species Act. The term commonly refers to species that are declining or appear to be in need of conservation.

2 Candidate species are reviewed by the WDFW for possible listing as Endangered, Threatened, or Sensitive according to the process and criteria defined in WAC-232-12-297 (WDFW 2017).

3.5.1 Federally Listed Species

Northwest prepared a draft Biological Assessment (BA) for our review and consideration; however, the FERC is responsible for preparing the final BA to submit to the USFWS and NMFS for ESA Section 7 consultation. We have determined that the proposed Project is likely to adversely affect the bull trout, Chinook salmon, and steelhead (see table 7).

Based on our findings and determinations, we are requesting that the USFWS and NMFS consider this analysis (including table 7 and appendix C) as our BA and enter into Formal Consultation for the bull trout, Chinook salmon, and steelhead trout. We also request that the USFWS concur with our determination of *not likely to adversely affect* for the remaining two federally listed species (i.e., the marbled murrelet and Oregon spotted frog), as identified in table 7.

We are still consulting with the USFWS and NMFS regarding federally listed threatened and endangered species that may be present in the Project area. In response to our BA, the USFWS and NMFS would issue a Biological Opinion as to whether or not the federal action would jeopardize the continued existence of a listed species, or result in the destruction or adverse modification of designated critical habitat. To ensure compliance with our responsibilities under Section 7 of the ESA regarding federally listed species, **we recommend that:**

Northwest <u>should not begin</u> construction or abandonment activities and/or use of any work areas <u>until</u>:

a. **the FERC staff receive comments from the USFWS and NMFS regarding the proposed action;**
b. **the FERC staff completes Section 7 consultation with the USFWS and NMFS; and**
c. **Northwest has received written notification from the Director of the Office of Energy Projects (OEP) that construction and/or use of mitigation (including implementation of any conservation measures) may begin.**

3.5.2 State Listed Species of Concern

The anadromous river lamprey is a state candidate species and has been identified as a priority species under the WDFW's Priority Habitats and Species Program. Little is known about river lamprey biology or its distribution in Washington, but historically likely occurred in most major rivers, including rivers throughout Puget Sound (Wydoski and Whitney 1979; USFWS 2004). It is suspected that river lamprey spawn in small nests dug in the sand and gravel at the upstream end of riffle habitat (Wydoski and Whitney 1979; USFWS 2004).

Anadromous adults begin migration from salt water between April and June and spawn during June and July; spawning is complete by September. Spawning occurs in nests formed as depressions in the small gravel of riffles generally upstream from young larvae (ammocoete) habitat. Ammocetes burrow, grow and live in areas of low velocity and fine sediments as filter feeders for 2 to 7 years before metamorphosing into juveniles that emigrate to the ocean where

they mature into adults and remain for 1 to 3 years (USFWS 2004).

River lamprey may possibly occur in the North Fork Nooksack River and Jim Creek. As discussed in section B.3.4, construction of the Project would increase turbidity immediately downstream of the Project area from groundwater dewatering activities; could result in fish mortality; remove riparian vegetation, which could affect water temperature; and adverse effects from limited application of herbicides to control noxious weeks near waterbodies; and could potentially include an accidental release of petroleum products into the water. All of these activities could adversely affect aquatic organisms. Northwest proposes to conduct in-stream activities in July, August, and September, which is within WDFW recommended in-water work windows. Northwest would implement its ECRP and additional minimization measures, described in section B.3.4, during construction to minimize impacts on waterbodies and fisheries. Therefore, we conclude that the Project would not significantly impact the river lamprey.

4. Land Use, Recreation, and Visual Resources

4.1 Land Use

Northwest's existing permanent right-of-way in the Project area is 75 to 85 feet wide. The permanent right-of-way includes 3 pipelines: the abandoned in place 26-inch-diameter Line 1400; the 30-inch-diameter Line 1401; and the 36-inch-diameter Line 1408. Northwest's current operations of the easement would continue post-construction; i.e., certain uses would be prohibited, such as the construction of buildings within the easement and growth of large trees. Additionally, to facilitate periodic inspections as required by the DOT, Northwest would conduct routine maintenance operations on the permanent right-of-way. This would consist of mowing or clearing a 50-foot-wide strip centered over the pipeline in upland areas no more frequently than every 3 years. In wetland and riparian areas, Northwest would only keep clear a 10-foot-wide strip centered over the pipeline and selectively cut any trees within 15 feet of the pipeline.

The Project would disturb approximately 10.20 acres of land use types that are generally previously disturbed (i.e., Agriculture, Urban, and Mixed Environs and Roads). The remaining 14.08 acres would consist of Forested Woodlands, Wetlands, and disturbance of less than 1 acre of Open Water area.

Northwest would require a total of 24.28 acres of land to construct its Project, of which 6.1 acres is existing permanent easement. Northwest would allow the remaining 18.18 acres of land (composed of temporary construction right-of-way, additional workspaces, and staging areas) to revert to its previous use following construction (see table 8, below).

Northwest would use three public roads and one private road to access the pipeline right-of-way during construction. The public roads are paved roads (Mt. Baker Highway-State Route 542, Truck Road, and Rutsatz Road) that would not require improvements. Northwest would also make minor improvements to one existing private graveled/dirt road.

Northwest would require 14 TEWAs totaling 18.1 acres to perform specialized construction techniques where the pipeline route would cross wetlands and waterbodies, existing utilities, roads, and pipeline interconnections The locations of the TEWAs are shown on the drawing in appendix A. A list of the extra workspaces is included in appendix D along with the justification Northwest provided for using each workspace. Land use impacts associated with extra workspaces are included in table 8 below. Northwest has proposed to use TEWAs 01, 03, 05, 06, and 07 for equipment staging and material storage, and therefore additional contractor yards are not being proposed. Northwest would follow the restoration measures outlined in its ECRP, and prior use of each of these TEWA locations would continue following construction.

Table 8.
Construction and Operation Impacts on Land Use

Facilities	Agriculture	Developed	Forest-Woodland	Riparian and Wetland		Open Water	Total
	Agriculture/ Pasture	Urban and Mixed Environs and Industrial	Westside Lowlands Conifer-Hardwood Forest	Westside Riparian-Wetland	Herbaceous Wetland	Rivers, Lakes, and Ponds	
CONSTRUCTION DISTURBANCE (Acres)							
Construction Right-of-Way [1]	0.23	3.33	0.14	0.00	2.29	0.12	**6.11**
Temporary Extra Work Areas	4.90	1.74	6.56	3.42	0.95	0.60	**18.17**
Total Construction Disturbance	**5.13**	**5.07**[3]	**6.70**	**3.42**	**3.24**	**0.72**	**24.28**
OPERATION DISTURBANCE (Acres)							
Permanent Easement[2]	0.23	3.33	0.14	0.00	2.29	0.12	**6.11**

[1] The temporary construction right-of-way occurs completely within Northwest's existing permanent easement that has been previously disturbed and maintained in an herbaceous condition but other vegetation types have encroached along the edges.
[2] After the Project, Northwest's existing permanent easement would be maintained in vegetation types currently within the Project footprint, identified under "Operation Disturbance;" no new permanent easement will be necessary for this Project.
[3] Urban and Mixed Environs/Industrial vegetation type includes 0.08 acre of existing, unpaved private road (<0.01 acre in the TEWAs and 0.08 acre in the right-of-way), and the graveled and fenced areas at mainline valves 17-7 and 17-8 that would be used to purge/fill the 26-inch pipeline with nitrogen or grout.

Agricultural Lands

Construction would affect about 5.13 acres of pastureland, of which 0.23 acre would be within the permanent easement. Following construction, the presence of the pipeline and permanent easement would not prohibit its current use; although any grazing activities would be suspended during construction, and landowners would need to divert their livestock to other areas. In order to minimize long-term impacts and to increase vegetation success in pasture areas, Northwest would segregate the topsoil from subsoil in agricultural lands during construction and restore the site to its previous state upon completion of construction in accordance with the Plan and their ECRP. In TEWAs 01, 03, 05, and 07, which are used as pasture, Northwest would segregate topsoil from subsoil over the entire temporary work area.

Wetlands and Waterbodies

A total of 5.72 acres of wetlands and 0.7 acre of waterbodies would be affected by construction. A full discussion of wetland and waterbody impacts is included in sections B.2.2 and B.2.3 of this EA. Northwest would fully restore these areas in accordance with its ECRP and the Jim Creek Restoration and Habitat Enhancement Plan.

Forested Lands

Construction of the Project would affect a total of 6.7 acres of forested lands, the majority of which is adjacent to its existing easement and needed for safe construction. In Washington, the Washington Department of Natural Resources regulates activities involving forest clearing and harvesting under the Forest Practice Rules (WAC Title 222). Felling and disposal of trees would be conducted by Northwest in accordance an authorization issued by the Department of Natural Resources or Whatcom County under the Forest Practice Rules.

Following construction, the 6.7 acres would be permitted to return to a forested state. These impacts, however, would be long-term given that forested lands would take 20 years or more to be fully restored.

Northwest would continue to conduct maintenance of its right-of-way once every three to five years in upland areas as it does on its existing right-of-way. Continued maintenance of vegetation would interrupt normal forest succession, and vegetation on the permanent right-of-way would be prevented from reaching a mature height. Northwest would maintain a 10-foot-wide strip centered over the 30-inch-diameter pipeline in an herbaceous state in riparian areas, and would clear a 50 foot width in uplands no more frequently than every 3 years. Due to the removal of the 26-inch-diameter pipeline, and the depth of the 36-inch-diameter pipeline, the easement area maintained in non-forested condition would be reduced from its current 75-85 feet to 50 feet.

Residential Construction

No residential areas are within 50 feet of any construction work area.

Industrial Lands

No industrial land would be affected by the Project.

4.2 Recreation and Special Use Areas

Northwest's Project would not impact recreation or special interest areas. There are no National Wild and Scenic Rivers, Natural Landmarks, National Forests, National Parks, National Wildlife Areas, State Parks, State Forests, or Indian Reservations within the Project area. The nearest park is Deming Homestead Eagle Park located 2,500 feet northeast of the Project on the North Fork Nooksack River.

4.3 Coastal Zone

The Project is within Washington's Coastal Management Zone, and the WDOE determines consistency with the Coastal Zone Management Act. Northwest would apply for a coastal consistency determination as part of the Washington State permitting process. **We recommend that:**

- **Northwest should <u>not begin construction</u> of the Project until it files with the Secretary of the Commission (Secretary) a copy of the determination of consistency with the Coastal Zone Management Plan issued by the WDOE.**

4.4 Visual Resources

The Project would not cross any National Scenic Byways or All American Roads (Washington State Department of Transportation 2017). The Project is adjacent to, but would not cross Mt. Baker Highway (State Route 542), which is designated as a Washington State Scenic Byway. The Washington State Department of Transportation does not have construction restrictions for projects located along scenic byways. For travelers using the highway, visual impacts during construction will be brief due to existing vegetation cover and travel speeds as well as the pipeline's perpendicular alignment to the highway.

The Project's primary impacts on visual resources would occur during active construction, from the clearing of the right-of-way, the presence of personnel and heavy construction equipment, and storage of construction materials. These construction impacts would be temporary, as Northwest expects that the removal and replacement of the pipeline would take approximately 4 months, concluding in the fall of 2019. During restoration, the construction work area would be characterized by grading equipment and by bare soil. Following completion of construction, vegetation would begin to recolonize the right-of-way in the late fall of 2019 and would return to preconstruction condition within 2 to 3 years in agricultural lands, wetlands (shrub-scrub and emergent), and open lands.

The primary visual impact of this Project would be a temporary widening of Northwest's existing utility corridor where existing forested lands are already broken due to the pipeline easement. Once completed, Northwest would only maintain a 50 foot-wide right-of-way centered over the 30-inch-diameter pipeline, rather than the 75-85 foot-wide easement area currently maintained. Following construction, forested areas that would be cleared would be permitted to reforest; however, this could take upwards of 20 years or more.

Given that the Project would utilize the existing easement for construction, no aboveground facilities would be constructed, and that following completion of the Project Northwest would maintain a narrower right-of-way than at present, we conclude that visual impacts would be minor.

4.5 Hazardous Waste or Contamination

There are no National Priorities List sites or landfills within 0.25 mile of the Project. If any hazardous waste is encountered during pipeline construction, Northwest would dispose of it according to WAC sections 173-303. Sampling data from a previous anomaly dig project near the Project site show that the existing coating on the 30-inch pipeline contains polychlorinated biphenyls (PCBs) in excess of 50 parts per million (ppm). Asbestos was also confirmed to be present within the coating of the 30-inch-diameter pipeline. Northwest would take confirmation

samples of each coating type prior to, or during, removal of the 26-inch- and 30-inch-diameter pipelines to determine concentrations of PCBs and presence of asbestos.

All removed pipeline with coating having PCB concentrations above 50 ppm would be managed in accordance with PCB rules and regulations issued by the EPA and contained within 40 CFR 761. Northwest would oversee all aspects of coating removal and testing prior to disposal, sale or reuse of the pipe to ensure compliance with all applicable requirements under the Toxic Substances Control Act, the Resource Conservation and Recovery Act and the National Emission Standards for Hazardous Air Pollutants. The removal of any pipe coated with asbestos containing material would be managed in accordance with EPA requirements in 40 CFR 763 and Occupational Safety and Health Administration rules under 29 CFR 1926.1101.

Personal protective equipment would be used by workers to prevent exposure to asbestos along with the measures in the Project-specific safety plan and Northwest's Standard Operating Procedure 620.2 - Asbestos. These procedures include respiratory protection and methods for preventing asbestos releases to the environment. Specific requirements include:

- contractor personnel must have asbestos removal certification; and
- specific containment procedures to be followed when coating is removed from the pipe, when pipe with asbestos containing coating is removed from the pipe trench, and during pipe transportation and storage.

The use of personal protective equipment by workers during pipe removal containing PCBs and/or asbestos and the implementation of Northwest's project-specific safety plan and standard operating procedures would minimize risk to workers and ensure proper disposal of contaminated pipe or coating.

5. Cultural Resources

Section 106 of the National Historic Preservation Act, as amended, requires that federal agencies take into account the effects of their undertakings (including the issuance of permits or Certificates) on properties listed on, or eligible for listing on, the National Register of Historic Places and to provide the Advisory Council on Historic Preservation an opportunity to comment on the undertaking. Northwest, as a non-federal party, is assisting the FERC in meeting our obligations under Section 106 and the implementing regulations in 36 CFR 800.

Northwest, in a letter dated July 19, 2016, recommended an area of potential effects and survey area to be reviewed for the Project. In a response dated July 27, 2017, the Washington State Historic Preservation Officer (SHPO) accepted the area of potential effects. Northwest provided the cultural resources survey report on February 8, 2017, and an addendum report on March 15, 2017. Of the 93.5 acres surveyed for the Project, 38.1 acres are erodible soils that have been impacted by the North Fork Nooksack River which were not investigated and 26.7 acres were previously surveyed. The current survey consisted of 28.7 acres, and only one early to mid-20th century debris scatter was identified. Northwest recommended that no historic properties would be affected by the Project. In a responses dated February 9, 2017, and March

15, 2017, the SHPO concurred that no historic properties would be affected by the Project. We agree.

In letters dated July 19, 2016, Northwest contacted the following federally recognized tribes (Tribes): Nooksack Indian Tribe, Lummi Nation, Samish Indian Nation, Suquamish Tribe, and Tulalip Tribes of Washington. The Samish Indian Nation responded in an email dated August 4, 2016, stating that they did not want to participate in reviewing the Project. Northwest sent the cultural resources reports to the remaining Tribes on February 8, 2017 and March 21, 2017. Northwest met with the Nooksack Indian Tribe on February 15, 2017 to discuss the Project. FERC staff and Northwest met with the Lummi Nation on July 12, 2017 to discuss the Project and conduct a site visit. In a letter dated July 25, 2017 to FERC, the Lummi Nation noted their ancestral ties to the vicinity and their provided comments regarding natural resources concerns with wetlands, water resources, fisheries and fish habitat, endangered species, climate change, and existing shoreline stabilization. The Lummi Nation stated that comments regarding cultural resources would be forthcoming. No additional responses from Tribes have been filed.

On the same dates that Northwest provided information to the Tribes, the same information was sent to the Bureau of Indian Affairs. No responses have been filed.

Northwest filed an Unanticipated Discovery Plan, and we find the plan acceptable.

Northwest consulted with the SHPO regarding the potential effects to cultural resources. The SHPO did not object to the defined area of potential effects and concurred that the Project would have no effects on historic properties. Additionally no traditional cultural properties or properties of religious or cultural importance to Tribes have been identified by Northwest, its consultants, the SHPO, or Tribes. The FERC staff and the SHPO agree that the Project would have no effects on historic properties.

6. Air Quality and Noise

6.1 Air Quality

Air quality would be affected by construction and operation of the Project. The Project would result in temporary emissions of regulated air pollutants and other air contaminants generated from construction activities including operation of equipment, land disturbance, and increased traffic from worker and delivery vehicles. Northwest does not propose any new operating emission sources or modifications to existing emission sources; therefore, no air permitting actions are required. In addition, the proposed Project would not involve any changes in the volume of natural gas being transmitted through the pipeline system.

Ambient air quality is protected by federal and state regulations. Under the Clean Air Act and its amendments, the EPA has established National Ambient Air Quality Standards (NAAQS) for carbon monoxide (CO), lead, nitrogen dioxide, ozone, particulate matter less than 10 microns (PM_{10}), particulate matter less than 2.5 microns ($PM_{2.5}$), and sulfur dioxide (SO_2). These standards incorporate short-term (hourly or daily) levels and long-term (annual) levels to

address acute and chronic exposures to the pollutants, as appropriate. The NAAQS include primary standards, which are designed to protect human health, including the health of sensitive subpopulations such as children and those with chronic respiratory problems. The NAAQS also include secondary standards designed to protect public welfare, including economic interests, visibility, vegetation, animal species, and other concerns not related to human health. The State of Washington has adopted all of the NAAQS.

Areas of the country in violation of the NAAQS are designated by EPA as nonattainment areas. Areas formerly designated as nonattainment that have subsequently reached attainment are designated maintenance areas for that pollutant. New sources to be located in or near nonattainment or maintenance areas may be subject to more stringent air permitting requirements. The EPA and state and local agencies have established a network of ambient air quality monitoring stations to measure and track the background concentrations of criteria pollutants across the United States. The Project is in Whatcom County, Washington, within the Olympic-Northwest Washington Intrastate Air Quality Control Region, which is designated as Attainment/Unclassifiable for all criteria pollutants.

The EPA defines air pollution to include greenhouse gases (GHG). The most common GHGs emitted during fossil fuel combustion and natural gas transportation are carbon dioxide (CO_2), methane (CH_4), and nitrous oxide (N_2O). Emissions of GHGs are typically expressed in terms of CO_2 equivalents (CO_{2e}), where the potential of each gas to increase heating in the atmosphere is expressed as a ratio relative to carbon dioxide over a specific timeframe, or its global warming potential, thus the global warming potential of CO_2 is 1, CH_4 is 25, and N_2O is 298. During construction of the Project, these GHGs would be emitted from non-electrical construction equipment. Because the Project involves the replacement of an existing pipeline, and does not involve the construction of aboveground facilities (e.g., launchers, receivers, valves, meter stations, etc.), the proposed replacement pipeline segment would not have the potential to leak methane under normal operation. Emission estimates of GHGs generated by Project construction activities are presented in table 9.

Construction of the Project would result in short-term increases in emissions of some pollutants from the use of fossil fuel (primarily diesel)-fired equipment and the generation of fugitive dust due to earthmoving activities. Some temporary indirect emissions, attributable to construction workers commuting to and from work sites during construction and from on-road and off-road construction vehicle traffic, could also occur. Large earth-moving equipment and other mobile equipment are sources of combustion-related emissions, including criteria pollutants (i.e., nitrogen oxides [NO_x], CO, volatile organic compounds [VOC], SO_2, hazardous air pollutants (HAP), and PM_{10}). These emissions present the combustion emissions from operation of construction equipment, on-road vehicles, off-road vehicles, as well as earthmoving fugitive particulate matter emissions. Detailed emissions calculations for each activity are provided in Northwest's Resource Report 9 within its Certificate application.

Table 9.
Estimated Construction Emissions (tons)

Source a/ b/	CO	NO_x	SO_2	VOC	PM_{10}	$PM_{2.5}$	HAP	CO_2e
Construction Equipment	10.43	24.56	0.22	6.50	1.78	1.73	1.36	3,063
Deliveries/Commutes	1.45	0.09	-	0.06	-	-	-	61
Fugitive Dust	-	-	-	-	5.44	1.68	-	-
Blowdown releases	-	-	-	3.59	-	-	-	-
Total	**11.88**	**24.65**	**0.22**	**10.15**	**7.22**	**3.41**	**1.36**	**3,124**

a/ Emissions estimated using EPA AP-42 emission factors, EPA nonroad engine emission factors, and engineering calculations.

b/ No quantifiable methane emissions are expected to occur along the Project replacement pipeline during normal operation since no aboveground facilities (e.g., launchers, receivers, valves, meter stations, etc.) would be constructed.

Construction of the Project would occur in stages with tree clearing activities taking place in the fall of 2018 and clearing and grading, pipeline removal, and replacement activities being carried out in the summer of 2019. Heavy construction activities in 2019 would last 15 to 17 weeks at the pipe replacement location. The air quality impacts of Project construction are considered short-term and would be further minimized by Northwest's implementation of fugitive dust control measures such as disturbing no more ground than required for construction to occur, applying water on disturbed sites including temporary soil stockpiles as necessary to prevent transport of visible particulate emissions to adjacent areas, limiting Project-related traffic speeds on dirt access roads to 20 miles per hour and within the construction right-of-way to 15 miles per hour, and decreased when excessive winds prevail, halting ground-disturbing activities when the wind speed exceeds 30 miles per hour if visible fugitive particulate emissions are observed to be transported to areas outside of the construction site, and using gravel entryways to prevent mud and dirt carryout onto paved surfaces. No open burning would be conducted during Project construction.

The 30-inch-diameter pipeline segment that would be removed as part of the Project contains asbestos, as well as PCBs in excess of 50 ppm. For a discussion concerning the procedures Northwest would follow in the event that any pipe segments abandoned by removal are found to contain these hazardous materials, please refer to section B.4.5.

The nearest federally designated Class I areas are approximately 41 km (North Cascades National Park), 73 km (Glacier Peak Wilderness), and 87 km (Pasayten Wilderness) away from the proposed Project construction site. Emissions generated from Project construction, summarized in table 9, would quickly and sharply dissipate over the distances to each of these federally protected areas, and disperse into existing ambient concentrations of criteria pollutants at these locations. Due to the limited nature of construction activities that would take place intermittently over a period of several months, we expect no Project-related impacts to result on any federally designated Class I area.

Since the Project would be in an area currently classified as attainment for all criteria pollutants, the General Conformity Rule codified in 40 CFR 51 Subpart W, and Part 93 Subpart

B, determining Conformity of General Federal Actions to State or Federal Implementation Plans, does not apply to the Project.

Given the temporary nature of construction and the intermittent nature of construction emissions, we find that emissions from construction-related activities for the Project are not expected to cause or significantly contribute to a violation of any applicable ambient air quality standard, would minimally and temporarily affect local air quality, and have a negligible and temporary impact on regional air quality.

6.2 Noise

Construction of the Project would affect the local noise environment. The ambient sound level of a region, defined by the total noise generated within the specific environment, is usually comprised of sounds emanating from natural and artificial sources. At any location, both the magnitude and frequency of environmental noise may vary considerably over the course of a day and throughout the week, caused in part due to changing weather conditions and the effect of seasonal vegetation cover.

No nearby noise-sensitive areas would be affected by Project construction noise. Project construction would primarily be limited to daytime hours (7:00 am to 10:00 pm); therefore, nighttime noise levels would remain unaffected by most construction activities.

The Whatcom County Code adopts the environmental noise level standards specified in the Washington Administrative Code. WAC 173-60-050(1)(e) exempts noise created during the installation of “essential utility services” between the hours of 7:00 am and 10:00 pm. Thus, the Project construction activities would qualify under this exemption, and no state or county level noise standards would apply to the Project.

Construction activities would be intermittent and temporary, involving operation of equipment including bulldozers, graders, backhoes, front end loaders, cranes, welding machines, trucks, pickups, and other miscellaneous equipment typically used at construction sites.

A blowdown would be performed to prepare the proposed existing 1,700 foot pipeline segment for removal. Noise from this blowdown may be heard by some noise-sensitive areas in the vicinity of the blowdown, which would be performed at the site of mainline valve 17L-7. To minimize potential impacts on noise-sensitive areas, all such areas potentially impacted by noise from the blowdown would be notified in advance.

The Project does not involve the construction or use of any new permanent noise sources. Therefore, the Project would not impact noise levels during operation.

Based on the above analysis, we conclude that the Project would not result in significant noise impacts on any noise-sensitive areas, and any impacts would be minor and cease after Project construction activities are complete.

7. Reliability and Safety

The transportation of natural gas by pipeline involves some incremental risk to the public due to the potential for an accidental release of natural gas. The greatest hazard is a fire or explosion following a major pipeline rupture.

Methane, the primary component of natural gas, is colorless, odorless, and tasteless. It is not toxic, but is classified as a simple asphyxiate, possessing a slight inhalation hazard. If breathed in high concentration, oxygen deficiency can result in serious injury or death.

Methane has an auto-ignition temperature of 1,000 ºF and is flammable at concentrations between 5.0 percent and 15.0 percent in air. An unconfined mixture of methane and air is not explosive; however, it may ignite if there is an ignition source. A flammable concentration within an enclosed space in the presence of an ignition source can explode. Methane is buoyant at atmospheric temperatures and disperses rapidly in air.

7.1 Safety Standards

The DOT is mandated to provide pipeline safety; the standards are published in 49 CFR 190-199. Part 192 specifically addresses natural gas pipeline safety issues. The DOT's Pipeline and Hazardous Materials Safety Administration's (PHMSA) administers the national regulatory program to ensure the safe transportation of natural gas and other hazardous materials by pipeline. It develops safety regulations and other approaches to risk management that ensure safety in the design, construction, testing, operation, maintenance, and emergency response of pipeline facilities. Many of the regulations are written as performance standards which set the level of safety to be attained and allow the pipeline operator to use various technologies to achieve safety.

PHMSA ensures that people and the environment are protected from the risk of pipeline incidents. This work is shared with state agency partners and others at the federal, state, and local level. Title 49, U.S. Code Chapter 601 provides for a state agency to assume all aspects of the safety program for intrastate facilities by adopting and enforcing the federal standards. A state may also act as DOT's agent to inspect interstate facilities within its boundaries; however, the DOT is responsible for enforcement actions. The state of Washington has delegated authority to inspect interstate pipeline facilities, including the proposed Project. The DOT pipeline standards are published in 49 CFR 190-199. Part 192 specifically addresses natural gas pipeline safety issues.

Under a *Memorandum of Understanding on Natural Gas Transportation Facilities* (Memorandum) dated January 15, 1993, between the DOT and the FERC, the DOT has the exclusive authority to promulgate federal safety standards used in the transportation of natural gas. Section 157.14(a)(9)(vi) of the FERC's regulations require that an applicant certify that it would design, install, inspect, test, construct, operate, replace, and maintain the facility for which a Certificate is requested in accordance with federal safety standards and plans for maintenance and inspection, or certify that it has been granted a waiver of the requirements of the safety

standards by the DOT in accordance with section 3(e) of the Natural Gas Pipeline Safety Act. The FERC accepts this certification and does not impose additional safety standards other than the DOT standards. If the Commission becomes aware of an existing or potential safety problem, there is a provision in the Memorandum to promptly alert the DOT. The Memorandum also provides for referring complaints and inquiries made by state and local governments and the general public involving safety matters related to pipelines under the Commission's jurisdiction.

The FERC also participates as a member of the DOT's Technical Pipeline Safety Standards Committee which determines if proposed safety regulations are reasonable, feasible, and practicable.

The pipeline and aboveground facilities associated with the Project must be designed, constructed, operated, and maintained in accordance with the DOT Minimum Federal Safety Standards in 49 CFR 192. The regulations are intended to ensure adequate protection for the public and to prevent natural gas facility accidents and failures. The DOT specifies material selection and qualification; minimum design requirements; and protection from internal, external, and atmospheric corrosion.

The DOT also defines area classifications, based on population density in the vicinity of the pipeline, and specifies more rigorous safety requirements for populated areas. The class location unit is an area that extends 220 yards on either side of the centerline of any continuous 1-mile length of pipeline. The four area classifications are defined below:

Class 1 - location with 10 or fewer buildings intended for human occupancy.

Class 2 - location with more than 10 but less than 46 buildings intended for human occupancy.

Class 3 - location with 46 or more buildings intended for human occupancy or where the pipeline lies within 100 yards of any building, or small well-defined outside area occupied by 20 or more people on at least 5 days a week for 10 weeks in any 12-month period.

Class 4 - location where buildings with four or more stories aboveground are prevalent.

Class locations representing more populated areas require higher safety factors in pipeline design, testing, and operation. Pipelines constructed on land in Class 1 locations must be installed with a minimum depth of cover of 30 inches in normal soil and 18 inches in consolidated rock. Class 2, 3, and 4 locations, as well as drainage ditches of public roads and railroad crossings, require a minimum cover of 36 inches in normal soils and 24 inches in consolidated rock.

Class locations also specify the maximum distance to a sectionalizing block valve (i.e., 10.0 miles in Class 1, 7.5 miles in Class 2, 4.0 miles in Class 3, and 2.5 miles in Class 4

locations). Pipe wall thickness and pipeline design pressures; hydrostatic test pressures; MAOP; inspection and testing of welds; and frequency of pipeline patrols and leak surveys must also conform to higher standards in more populated areas. The Project would consist of approximately 0.32 mile of Class 1 pipe.

If a subsequent increase in population density adjacent to the right-of-way indicates a change in class location for the pipeline, Northwest would reduce the MAOP or replace the segment with pipe of sufficient grade and wall thickness, if required to comply with the DOT regulations for the new class location.

The DOT Pipeline Safety Regulations require operators to develop and follow a written integrity management program that contains all the elements described in 49 CFR 192.911 and addresses the risks on each transmission pipeline segment. Specifically, the law establishes an integrity management program which applies to all high-consequence areas (HCA).

The DOT has published rules that define HCAs where a gas pipeline accident could do considerable harm to people and their property and requires an integrity management program to minimize the potential for an accident. This definition satisfies, in part, the Congressional mandate for the DOT to prescribe standards that establish criteria for identifying each gas pipeline facility in a high-density population area.

The HCAs may be defined in one of two ways. In the first method an HCA includes:

- current class 3 and 4 locations,
- any Class 1 or 2 locations where the potential impact radius[13] is greater than 660 feet and there are 20 or more buildings intended for human occupancy within the potential impact circle,[14] or
- any Class 1 or 2 locations where the potential impact circle includes an identified site.

An identified site is an outside area or open structure that is occupied by 20 or more persons on at least 50 days in any 12-month period; a building that is occupied by 20 or more persons on at least 5 days a week for any 10 weeks in any 12-month period; or a facility that is occupied by persons who are confined, are of impaired mobility, or would be difficult to evacuate.

In the second method, an HCA includes any area within a potential impact circle that contains:

- 20 or more buildings intended for human occupancy, or

---

13 The potential impact radius is calculated as the product of 0.69 and the square root of the pipeline MAOP (in pounds per square inch, gauge) multiplied by the square of the pipeline diameter (in inches).

14 The potential impact circle is a circle of radius equal to the potential impact radius.

- an identified site.

Once a pipeline operator has determined the HCAs along its pipeline, it must apply the elements of its integrity management program to those sections of the pipeline within HCAs. Northwest would complete the HCA determination within one year of the in-service date of the Project. The DOT regulations specify the requirements for the integrity management plan at section 192.911. For the proposed Project, HCAs have been determined based on the relationship of the pipeline centerline to other nearby structures and identified sites. Northwest has not identified any HCAs along the proposed pipeline route. The pipeline integrity management rule for HCAs requires inspection of the pipeline every 7 years.

The DOT prescribes the minimum standards for operating and maintaining pipeline facilities, including the requirement to establish a written plan governing these activities. Each pipeline operator is required to establish an emergency plan that includes procedures to minimize the hazards in a natural gas pipeline emergency. Key elements of the plan include procedures for:

- receiving, identifying, and classifying emergency events, gas leakage, fires, explosions, and natural disasters;
- establishing and maintaining communications with local fire, police, and public officials, and coordinating emergency response;
- emergency system shutdown and safe restoration of service;
- making personnel, equipment, tools, and materials available at the scene of an emergency; and
- protecting people first and then property, and making them safe from actual or potential hazards.

Northwest operates area offices along its pipeline system that allow Northwest personnel to provide a quick response to any emergency situation and to direct safety operations as necessary. Northwest would also monitor the Project facilities from its gas control center, which is maintained in Salt Lake City, Utah, and monitors system pressures, flows, and customer deliveries 24 hours per day, 365 days per year.

The North Fork Nooksack pipeline crossing is monitored on a weekly basis from Rutsatz Road using visual reference markers that have been installed north of the river over the pipelines. The markers provide a monitoring guide that can be inspected from a common reference point on the south side of the river (Rutsatz Road) when high flow conditions prevent access to the Project area. River crossing profile surveys are conducted every three years.

Northwest also conducts aerial patrols at least once per year, depending on the feature(s) inspected. Additional ground surveys are conducted on an as-needed basis to respond to issues such as landowner concerns and third-party encroachment on the pipeline right-of-way. In accordance with DOT regulations, Northwest also regularly inspects its facilities for leakage as part of scheduled operations and maintenance. The Project would be subject to these regulations.

The DOT regulations require Northwest to establish and maintain liaison with appropriate fire, police, and public officials to learn the resources and responsibilities of each organization that may respond to a natural gas pipeline emergency, and to coordinate mutual assistance. Northwest's liaison with fire, police, and public officials, and local utilities along its pipeline system would continue following construction of the Project.

7.2 Pipeline Accident Data

The DOT requires all operators of natural gas transmission pipelines to notify it of any significant incident and to submit a report within 30 days. Significant incidents are defined as any leaks that:

- caused a death or personal injury requiring hospitalization; or
- involve property damage of more than $50,000, in 1984 dollars.[15]

During the 20-year period from 1990 through 2009, a total of 1,104 significant incidents were reported on the more than 300,000 total miles of natural gas transmission pipelines nationwide.

Additional insight into the nature of service incidents may be found by examining the primary factors that caused the failures. Table 10 provides a distribution of the causal factors as well as the number of each incident by cause.

[15] $50,000 in 1984 dollars was approximately $109,000 in 2011 (Bureau of Labor Statistics, 2011).

Table 10.
Natural Gas Transmission Pipeline Significant Incidents by Cause (1996-2015)

Cause a/	Number of Incidents	Percentage
Pipeline material, weld, or equipment failure	354	27.0
Corrosion	311	23.7
Excavation	210	16.0
All other causes b/	165	12.6
Natural forces c/	146	11.1
Outside force d/	84	6.4
Incorrect operation	40	3.1
Total	**1,310**	**100**

a/ All data gathered from PHMSA's Oracle BI Interactive Dashboard website for Significant Transmission Pipeline Incidents, https://hip.phmsa.dot.gov/analyticsSOAP/saw.dll?Portalpages&NQUser=PDM_WEB_USER&NQPassword=Public_Web_User1&PortalPath=%2Fshared%2FPDM%20Public%20Website%2F_portal%2FSC%20Incident%20Trend&Page=Significant&Action=Navigate&col1=%22PHP%20-%20Geo%20Location%22.%22State%20Name%22&val1=%22%22 (DOT 2016a). Accessed on 2/17/2016.

b/ All other causes include miscellaneous, unspecified, or unknown causes.

c/ Natural force damage includes earth movement, heavy rain, floods, landslides, mudslides, lightning, temperature, high winds, and other natural force damage.

d/ Outside force damage includes previous mechanical damage, electrical arcing, static electricity, fire/explosion, fishing/maritime activity, intentional damage, and vehicle damage (not associated with excavation).

The dominant causes of pipeline incidents are corrosion and pipeline material, weld or equipment failure constituting 50.7 percent of all significant incidents. The pipelines included in the data set in table 10 vary widely in terms of age, diameter, and level of corrosion control. Each variable influences the incident frequency that may be expected for a specific segment of pipeline.

- The frequency of significant incidents is strongly dependent on pipeline age. Older pipelines have a higher frequency of corrosion incidents because corrosion is a time-dependent process. The frequency of significant incidents is strongly dependent on pipeline age. Older pipelines have a higher frequency of corrosion incidents because corrosion is a time-dependent process.

- The use of both an external protective coating and a cathodic protection system,[16] required on all pipelines installed after July 1971, significantly reduces the corrosion rate compared to unprotected or partially protected pipe.

Outside force, excavation, and natural forces are the cause in 33.5 percent of significant pipeline incidents. These result from the encroachment of mechanical equipment such as bulldozers and backhoes; earth movements due to soil settlement, washouts, or geologic hazards;

[16] Cathodic protection is a technique to reduce corrosion (rust) of the natural gas pipeline that includes the use of an induced current and/or a sacrificial anode that corrodes preferentially.

weather effects such as winds, storms, and thermal strains; and willful damage. Table 11 provides a breakdown of external force incidents by cause.

Table 11.
Excavation, Natural Forces, and Outside Forces Incidents by Cause (1996-2015)

Cause a/	Number of Excavation, Natural Forces, and Outside Force Incidents	Percentage of All Incidents b/,c/
Third party excavation damage	172	13.1
Heavy rain, floods, mudslides, landslides	74	5.7
Vehicle (not engaged with excavation)	49	3.7
Earth movement, earthquakes, subsidence	32	2.4
Lightning, temperature, high winds	27	2.1
Operator/contractor excavation damage	25	1.9
Unspecified excavation damage/previous damage	13	1.0
Other or unspecified natural forces	13	1.0
Fire/explosion	9	0.7
Fishing or maritime activity	9	0.7
Other outside force	9	0.7
Previous mechanical damage	6	0.5
Electrical arcing from other equipment/facility	1	0.1
Intentional damage	1	0.1
Total	**440**	**33.5**

a/ All data gathered from PHMSA's Oracle BI Interactive Dashboard website for Significant Transmission Pipeline Incidents, https://hip.phmsa.dot.gov/analyticsSOAP/saw.dll?Portalpages&NQUser=PDM_WEB_USER&NQPassword=Public_Web_User1&PortalPath=%2Fshared%2FPDM%20Public%20Website%2F_portal%2FSC%20Incident%20Trend&Page=Significant&Action=Navigate&col1=%22PHP%20-%20Geo%20Location%22.%22State%20Name%22&val1=%22%22 Accessed on 2/17/2016.

b/ Percentage of all incidents was calculated as a percentage of the total number of incidents natural gas transmission pipeline significant incidents (i.e., all causes) presented in table 10.

c/ Due to rounding, column does not equal 33.6 percent.

Older pipelines have a higher frequency of outside forces incidents partly because their location may be less well known and less well marked than newer lines. In addition, the older pipelines contain a disproportionate number of smaller diameter pipelines, which have a greater rate of outside forces incidents. Small diameter pipelines are more easily crushed or broken by mechanical equipment or earth movements.

Since 1982, operators have been required to participate in "One Call" public utility programs in populated areas to minimize unauthorized excavation activities in the vicinity of pipelines. The "One Call" program is a service used by public utilities and some private sector companies (e.g., oil pipelines and cable television) to provide preconstruction information to contractors or other maintenance workers on the underground location of pipes, cables, and culverts.

7.3 Impact on Public Safety

Table 12 presents the average annual fatalities that occurred on natural gas transmission lines for the 5-year period between 2011 and 2015. The majority of fatalities from pipelines are due to local distribution pipelines not regulated by FERC. These are natural gas pipelines that distribute natural gas to homes and businesses after transportation through interstate natural gas transmission pipelines. In general, these distribution lines are smaller diameter pipes and/or plastic pipes which are more susceptible to damage. Local distribution systems do not have large rights-of-way and pipeline markers common to the FERC regulated natural gas transmission pipelines. Therefore, incident statistics inclusive of distribution pipelines are inappropriate to use when considering natural gas transmission projects.

Table 12.
Annual Average Injuries and Fatalities - Natural Gas Transmission Pipelines

Year a/	Injuries		Fatalities	
	Employees	Public	Employees	Public
2011	1	0	0	0
2012	3	4	0	0
2013	0	2	0	0
2014	1	0	1	0
2015	12	2	6	0

a/ All data gathered from PHMSA Pipeline Incident Flagged Files website on March 6, 2015 http://phmsa.dot.gov/pipeline/library/data-stats/flagged-data-files.

The nationwide totals of accidental fatalities from various manmade and natural hazards are listed in table 13 in order to provide a relative measure of the industry-wide safety of natural gas transmission pipelines. Direct comparisons between accident categories should be made cautiously, however, because individual exposures to hazards are not uniform among all categories. The data nonetheless indicate a low risk of death due to incidents involving natural gas transmission pipelines compared to the other categories. Furthermore, the fatality rate is much lower than the fatalities from natural hazards such as lightning, tornados, or floods.

Table 13.
Nationwide Accidental Fatalities by Cause

Type of Accident	Annual Number of Deaths
Motor vehicle a/	35,369
Poisoning a/	38,851
Falls a/	30,208
Drowning a/	3,391
Fire, smoke inhalation, burns a/	2,760
Floods b/	81
Tornado b/	72
Lightning b/	49
Hurricane b/	47
Natural gas distribution lines c/	13
Natural gas transmission pipelines c/	2

a/ Accident data presented for motor vehicle, poisoning, falls, drowning, fire, smoke inhalation, and burns represent the annual accidental deaths recorded in 2013 (Centers for Disease Control and Prevention, 2013; Deaths: Final Data for 2013; http://www.cdc.gov/nchs/data/nvsr/nvsr64/nvsr64_02.pdf. Accessed 2/17/2016.)

b/ Accident data presented for floods, tornados, lightning, and hurricanes represent the 30 year average of accidental deaths between 1985 and 2014 National Weather Service, Office of Climate, Water and Weather Services, National Hazard Statistics, 30 year average (1985-2014); Available at: **Error! Hyperlink reference not valid.**http://www.nws.noaa.gov/om/hazstats.shtml. Accessed 2/17/2016.

c/ Accident data presented for natural gas distribution lines and transmission pipelines represent the 20-year average between 1996 and 2015. PHMSA, Pipeline Significant Incident 20 Year Trend: 20-Year Average (1996-2015); Available at: http://opsweb.phmsa.dot.gov/primis_pdm/significant_inc_trend.asp. Accessed 2/17/2016.

The available data show that natural gas transmission pipelines continue to be a safe, reliable means of energy transportation. From 1996 to 2015, there were an average of 65.8 significant incidents, 9.1 injuries, and 2.3 fatalities per year. The number of significant incidents distributed over the more than 303,000 miles of natural gas transmission pipelines indicates the risk is low for an incident at any given location. Operation of the Project would represent only a slight increase in risk to the nearby public.

8. Cumulative Impacts

In accordance with NEPA and FERC policy, we evaluated the potential for cumulative impacts of the Project. Cumulative impacts were assessed for the proposed Project elements when added to other past, present, and reasonably foreseeable future activities.

Cumulative effects generally refer to impacts that are additive or synergistic in nature and result from the construction of multiple projects in the same vicinity and time frame. Cumulative impacts represent the incremental effects of a proposed action when added to other past, present, or reasonably foreseeable future actions, regardless of the agency or party undertaking such actions. Cumulative impacts can result from individually minor, but collectively significant actions, taking place over a period of time. In general, small-scale projects with minimal impacts of short duration do not significantly contribute to cumulative impacts.

This cumulative impact analysis generally follows the methodology set forth in relevant guidance (Council on Environmental Quality 2005; EPA 1999). Under these guidelines, inclusion of other projects in the analysis is based on identification of impacts from other

projects that would result in similar effects as the proposed Project. We undertook this assessment considering the following factors:

- A past, present, or future project must impact a resource potentially affected by the proposed action. Distant projects were not considered because their impacts would not likely overlap.

- The time in the past or future of other projects was considered, since the potential for cumulative effects is dependent on the duration of the impact, and whether it be short-term, long-term, or permanent. Present projects would be considered to overlap in time of occurrence.

- The cumulative impacts discussed herein have been based on information filed by Northwest, information from other FERC filings, agency and public input, and other publicly accessible information.

The Council on Environmental Quality (CEQ) issued an interpretive memorandum on June 24, 2005, regarding analysis of past actions, which stated: "agencies can conduct an adequate cumulative effects analysis by focusing on the current aggregate effects of past actions without delving into the historical details of individual past actions." In order to understand the contribution of past actions to the cumulative effects of the proposed action, this analysis relies on current environmental conditions as a proxy for the impacts of past actions. This is because existing conditions reflect the aggregate impact of all prior human actions and natural events that have affected the environment and might contribute to cumulative effects.

In this analysis, we generally consider the impacts of past projects within the resource specific geographic scopes as part of the affected environment (environmental baseline) which was described under the specific resources discussed throughout section B of this EA. However, this analysis does include the present effects of past actions that are relevant and useful, as discussed further below. The area surrounding the Project site is rural and largely undeveloped. To the north of the Project area, there are a few paved roads (Truck Road, Mt. Baker Highway and Marshall Hill Road) and a few houses on larger tracts of land. South of the North Fork Nooksack River are Rutsatz Road and a few homes on large parcels of land. Across the river, adjacent to mainline valve 17-8 are a log storage area for home building and various homes and buildings.

In accordance with the CEQ regulations for implementing NEPA, we identified other actions located in the vicinity of the proposed action and evaluated the potential for a cumulative impact on the environment. We assessed the potential cumulative effects of the proposed Project with other past, present, and reasonably foreseeable projects within the resource-specific geographic scopes as defined in table 14. The proposed Project would affect approximately 25 acres of land within the floodplain of the North Branch Nooksack River in Whatcom County, Washington. For comparison, the HUC 12 subwatershed that contains the Project site includes 29,537 acres (figure 3), thus the Project would impact less than 0.1 percent of the overall subwatershed. Further, the pipeline replacement activities associated with the proposed Project

are within the existing pipeline right-of-way in the area previously disturbed by installation of the existing 26-inch- and 30-inch-diameter pipelines, thereby minimizing the associated environmental impacts of Project activities, as described in the above sections of this EA.

As discussed above, geology and soil impacts would be highly localized and limited primarily to the Project footprint during the period of construction. In addition, Project-related construction activities would not result in significant impacts on groundwater resources as the Project is not near any public or private wells. Further, NHRP-eligible sites would be avoided; therefore the project would not impact cultural resources. Visual impacts associated with the Project would be minimized, as construction activities would take place in and adjacent to the existing right-of-way and no aboveground facilities would be constructed. Additionally, we have determined that the project would not generate air or noise emissions during operation, and construction period air and noise emissions are minor and below any reporting thresholds.

Therefore, we conclude that the impacts from this Project, when considered cumulatively with past, present, and reasonably foreseeable projects, would not contribute to cumulative impacts on these resources, and these resources are not discussed further in this section.

For the remaining resource areas (see table 14), we assessed cumulative impacts for the Project along with other projects in the general area by using information obtained from Northwest's consultations with local authorities and through our own research. Northwest consulted public sources for Whatcom County or municipalities crossed by the proposed Project to obtain information on any current or planned future developments. Building permit information from 1990 through 2017 was obtained from Whatcom County by Northwest for all permit requests within the HUC 12 subwatershed that contains the Project site (figure 3).

Since 1979, a total of 3,892 permits have been applied for or issued by Whatcom County for work involving the alteration of land or structures in this area. The listing of these projects can be obtained from the FERC public docket.[17] The permit list includes approved or pending development projects in the area such as temporary fireworks stands, brush/slash clearing and burning permits, land clearing and grading, home heating system installations, building additions, and road maintenance. More than 80 percent of the applications were for residential projects. Most of these have long since been completed, and even the current ones are of such a small scale that we can conclude that cumulative impacts with the proposed Project would be zero.

No other FERC projects or oil and gas development are currently proposed or ongoing in Whatcom County. However, through our evaluation of the list of permits and projects within the HUC 12 subwatershed, we identified three past projects that warranted further consideration for potential cumulative impacts with the proposed Project. These are Northwest's Capacity

---

17 Northwest's information on cumulative projects can be accessed under CP17-133 at https://elibrary.ferc.gov/idmws/search/fercgensearch.asp. See Accession number 20170918-5064.

Replacement Project (CP05-32-000), which was constructed in 2006; Northwest's installation of ELJs along the North Fork Nooksack River in 2015; and Whatcom County's Rutsatz Road Emergency Bank Stabilization Project, which was completed in 2016.

Northwest's Capacity Replacement Project included the installation of Line 1408 under the North Fork Nooksack by HDD. Line 1408 was installed within the same easement as the Project and many of the same TEWAs as proposed for the current Project were used during the construction period for the prior project. Work was completed in 2006, and the areas disturbed were restored. Over 10 years later, these areas are completely stabilized and recovered and we consider that project to be part of the baseline environment, therefore there is no potential for specific cumulative impacts.

Table 14.
Resource-Specific Regions for Determining Cumulative Impacts of the Project

Environmental Resource	Geographic Area
Surface Water, Wetlands, and Fisheries	Impacts on surface waters can result in downstream contamination or turbidity affecting surface water quality, wetlands, and fisheries; therefore, the geographic scope we used to assess cumulative impacts on waterbodies is the HUC-12 subwatershed crossed by the Project.
Vegetation and Wildlife	Vegetation clearing can temporarily reduce or permanently eliminate wildlife habitat; affecting both resident and transient species. The geographic scope we used to assess cumulative impacts on vegetation and wildlife is the HUC-12 subwatershed the Project occupies. Watersheds can serve as a geographic proxy for impacts on vegetation and wildlife and provides a natural boundary, as recommended by CEQ.
Land Use and Recreation	Project impacts on general land uses would be restricted to the construction workspaces. The Project would also not result in any new permanent land conversion for aboveground facilities. Land use in the Project area is mainly low density residential and forested land, along with existing rights-of-way. Therefore, we considered a 0.5-mile distance from the Project for the geographic scope because this would cover any land use/recreational impacts which could be incremental to the Project.
Traffic	Due to the Project's limited scope and the short construction duration, the geographic scope for assessing contributions to cumulative impacts on traffic were evaluated by considering other projects in Whatcom County that may be under construction concurrent with the proposed Project.

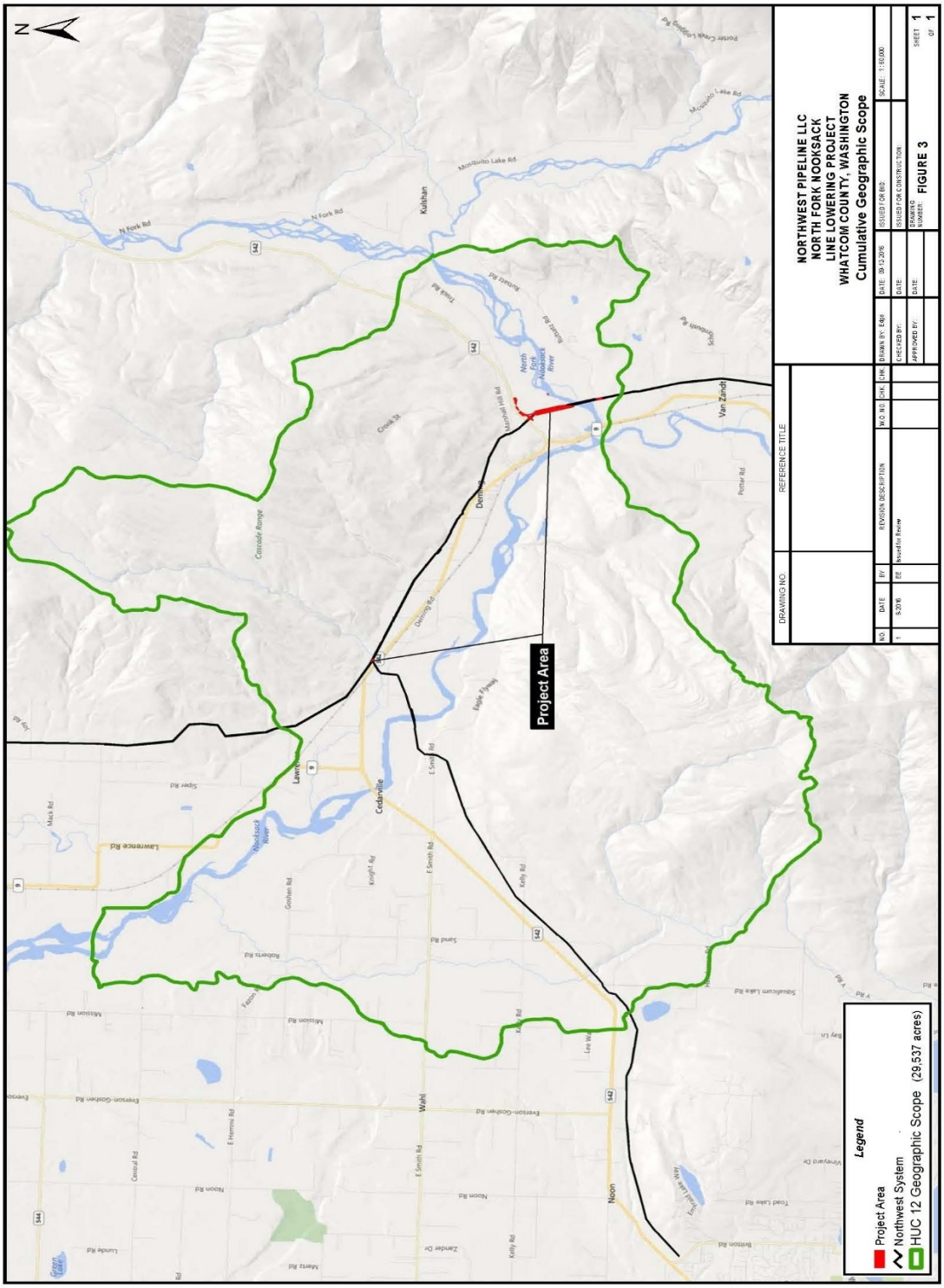

Figure 3. HUC-12 Subwatershed Boundary Used to Assess Cumulative Impacts

Northwest's ELJs were installed in 2015 along approximately 500 feet of river bank upstream of the Project area. These ELJs are currently in place and serving to protect the north bank of the North Fork Nooksack River against erosion. In 2016, Whatcom County conducted an emergency project (the Rutsatz Road Emergency Bank Stabilization Project) to stabilize a portion of the south bank of the North Fork Nooksack River approximately 0.25 mile downstream of the pipeline crossing. That project, completed in 2016, included placing large rip rap and woody debris at or below the ordinary high water mark, grading the slope, and planting native trees and shrubs. The potential cumulative impacts of these two projects in combination with the proposed Project are discussed below.

Surface Water. While the proposed Project would not directly affect the North Fork Nooksack River, it would affect Jim Creek through the use of a dry-ditch pipeline installation method to install the pipeline, as well as six other waterbodies where equipment bridge crossings would be used. For the six waterbodies that would be crossed by equipment bridges, no impact, cumulative or otherwise, would result. The dry-ditch crossing of Jim Creek would be accomplished through a combination of dam and pumping and through lowering the water table. The effects on water quality would be limited to the 4-month construction time frame (estimated by Northwest to be May to September 2019), and based on analyses of turbidity effects from using dam and pump methods, levels of turbidity in Jim Creek during construction would be similar to background levels upstream of the trench crossing location18.

The ELJs were installed in 2015 and are currently stable. The Rutsatz Road Emergency Bank Stabilization project was completed in early 2016. The Line Lowering Project's effects on surface water would not occur until 2019 and would not overlap with these two projects. As such, the Project would not contribute to cumulative effects within the North Fork Nooksack River.

Wetlands. Northwest's Project would affect six wetlands, totaling 5.72 acres. As discussed in section B.2.3, above, Northwest would comply with our Procedures, and the impacts on wetlands would be temporary, with full restoration occurring within a 2 to 3 year period. The ELJ project and the Rutsatz Road projects did not impact wetlands; therefore, the Project would not have a cumulative effects on wetlands.

Fisheries. The waterbodies crossed by each of the projects support fisheries, including ESA-protected species. Northwest's Project would have the potential to affect fisheries during the four month trenching and lowering construction period in 2019 and afterwards until the banks and riparian areas of Jim Creek are stabilized and revegetated (generally one growing season following completion of construction). As discussed in section B.3.2, through implementation of best management practices (i.e., dry ditch pipeline crossings, fish salvage,

---

18 See section 3.2.3.2 of Northwest's Environmental Resource Report 3, which can be accessed under CP17-133 at https://elibrary.ferc.gov/idmws/search/fercgensearch.asp. See Accession number 20170406-5337.

work timing restrictions, and compliance with FERC Procedures), and the proposed Jim Creek enhancement plan, significant impacts on fish by the Project would be avoided.

The ELJ project and the Rutsatz Road projects included placement of materials below the ordinary high water mark of the North Fork Nooksack River, resulting in impacts on fisheries during construction. These projects have been completed. The Line Lowering Project's effects on fisheries would not occur until 2019 and would not overlap with these two projects. Following completion of construction, the Project would not affect fish or fish habitat; therefore, there would not be any cumulative impacts on fisheries.

Vegetation. Of the 25 acres that may be disturbed by the Project, 10.2 acres are categorized as developed or pastures (i.e., previously disturbed lands), with 13.3 acres of vegetation disturbance occurring due to the need for temporary construction workspaces. Project-related tree clearing activities would take place in the fall of 2018. All disturbed areas would be revegetated to their prior condition except for 0.14 acre of currently forested land that would be maintained as open right-of-way during operation. The ELJ project did not involve any vegetation clearing; therefore, there would be no cumulative effects on vegetation. The Rutsatz Road project altered the existing river bank; however, the area has been replanted with native trees and shrubs. As the ELJ and Rutsatz Road projects resulted in minor impacts on vegetation, adding the minor impacts of the Project would not contribute to significant cumulative effects on vegetation.

Wildlife. The effects of Northwest's Project on wildlife would be limited to habitat effects, which are described under Vegetation. Effects to migratory birds would be avoided or minimized through implementation of surveys prior to construction and adherence to the Project construction schedule (planned for June to September 2019). The completed ELJ and Rutsatz Road projects provide some wildlife habitat along the river bank. As noted above, these effects would be short-term and temporary; thus, Northwest's contribution to cumulative effects are expected to be minimal.

Land Use and Recreation. Northwest's Project would not affect land use because it would involve the replacement of an existing pipeline in the same ditch. Likewise, the ELJ and Rutsatz Road projects did not permanently or significantly alter land use. Therefore, cumulative effects to land use are not expected. Neither the proposed Project nor the other two projects being considered affected or would affect recreation sites, although it is possible some individual use of the area for hiking or fishing could have been temporarily displaced during project activities. Even if this is the case, due to project timing, this impact would not be cumulative.

Traffic. Northwest's Project would not result in the construction of new roads, nor creation of new permanent employment (and related workforce vehicle trips). The only operational traffic would be from occasional vehicle trips associated with right-of-way maintenance. During construction, equipment and workers would access the construction area from local roadways, resulting in some interference with traffic flows during the 4 month construction period. The ELJs and Rutsatz Road projects have been completed and do not

currently generate any traffic; therefore, there would be no cumulative impacts on roads or traffic.

Conclusion. Northwest's contribution to cumulative impacts will be temporary, primarily restricted to the 4 month construction period, and minor when considered in combination with the past, present, and reasonably foreseeable projects in the Project area. Through the implementation of best management practices, the short construction and restoration period, and as Northwest's project consists of the replacement in kind of approximately 1,700 feet of existing pipeline, no significant contributions to cumulative impacts are anticipated from the North Fork Nooksack Line Lowering Project.

C. Alternatives

In accordance with NEPA and Commission policy, we considered and evaluated alternatives to the proposed action, including the no-action alternative, system alternatives, and alternate protection measures. These alternatives were evaluated using a specific set of criteria. The evaluation criteria applied to each alternative include a determination whether the alternative:

- meets the objectives of the proposed action (i.e., activities that would prevent the existing 30-inch-diameter pipeline from being exposed by movement of the North Fork Nooksack River);
- is technically and economically feasible and practical; and
- offers a significant environmental advantage over the proposed action.

Through environmental comparison and application of our professional judgment, each alternative is considered to a point where it becomes clear if the alternative could or could not meet the three evaluation criteria. In recognition of the competing interests and the different nature of impacts resulting from an alternative that sometimes exist (i.e., impacts on the natural environment versus impacts on the human environment), we also consider other factors that are relevant to a particular alternative and discount or eliminate factors that are not relevant or may have less weight or significance.

The alternatives were reviewed against the evaluation criteria in the sequence presented above. The first consideration for including an alternative in our analysis is whether or not it could satisfy the stated purpose of the project. An alternative that cannot achieve the purpose for the project cannot be considered as an acceptable replacement for the project.

Many alternatives are technically and economically feasible. Technically practical alternatives, with exceptions, would generally require the use of common construction methods. An alternative that would require the use of a new, unique, or experimental construction method may not be technically practical because the required technology is not available or is unproven. Economically practical alternatives would result in an action that generally maintains the price competitive nature of the proposed action. Generally, we do not consider the cost of an alternative as a critical factor unless the added cost to design, permit, and construct the alternative would render the project economically impractical. Determining if an alternative provides a significant environmental advantage requires a comparison of resource impacts, balancing the overall impacts with other relevant considerations (e.g., permitting requirements, land availability, land use conflicts, etc.). Taking into account these factors, our alternatives analysis is presented below.

1. No-Action Alternative

Although a Commission decision to deny the proposed action would avoid the environmental impacts addressed in this EA, the No-Action Alternative would leave the pipeline vulnerable to ongoing flood and erosion events that are currently impacting the north bank of the

North Fork Nooksack River and threatening the pipeline's integrity. Northwest would also not be able comply with the terms of its state and county permits for installing the ELJs that require completion of a long-term pipeline protection solution within 5 years of permit issuance. Additional short-term measures such as ELJs or other forms of bank stabilization would need to be employed, subject to receipt of federal, state, and county permits as well as landowner approvals. If these measures cannot successfully be employed, and the risk of exposure and threat to operational integrity reaches an unacceptable level, the pipeline may need to be taken out of service. This would limit Northwest's ability to meet contractual commitments and could result in delivery of natural gas to the public being compromised. Therefore, we conclude that the No-Action Alternative is not be preferable to the proposed action and we do not recommend it.

2. System Alternatives

System alternatives would make use of existing or modified natural gas systems to meet the stated objective of a proposed Project. The point of identifying and evaluating system alternatives is to determine if the potential environmental impact could be avoided or reduced by using another pipeline system or alternate configuration.

Between Sumas and Washougal, Washington, the operating Northwest pipeline system is comprised of an active 30-inch-diameter loop line (Line 1401) and 108 miles of an active 36-inch-diameter loop line (Line 1408), primarily within a common right-of-way. No other pipeline system currently exists or is proposed in western Washington that could duplicate the capacity and service of Northwest's existing 30-inch-diameter pipeline. There is no reasonable system alternative that can be considered as a substitute for the Project and therefore system alternatives are not considered further.

3. Alternative Protection Measures

Alternative methods for protecting the pipeline in place, including use of revetments and bendway weirs, were considered by Northwest, but rejected as they did not provide a long-term solution. Northwest also considered replacing the entire segment of Line 1401 between Mount Baker Highway and Rudsatz Road by trenching or by HDD. While Line 1401 was originally installed by trenching in 1971, the portion of the pipeline located beneath the river is sufficiently deep (15 feet below the riverbed) and does not require any protective action. Trenching through the river to remove and replace this section of pipeline would result in unnecessary impacts. Although the 36-inch-diameter Line 1408 was installed by HDD in 2005, a number of inadvertent releases of drilling fluid, borehole collapses, and drill string breaks occurred during the installation process, and Northwest does not consider installing a new 30-inch-diameter pipeline segment by HDD to be a viable alternative because the high risk of failure a new HDD attempt would present. We concur that these alternatives are not reasonable alternatives to the proposed Project, and do not recommend them.

In summary, we have determined that Northwest's proposed Project, as modified by our recommended mitigation measures, is the preferred alternative that can meet the Project objectives.

D. Conclusions and Recommendations

Based on the analysis in this EA and our review of Northwest's application and supplements, we conclude that if Northwest constructs and operates the facilities in accordance with its application and supplements, along with our recommended mitigation measures listed below, approval of this proposal would not constitute a major federal action significantly affecting the quality of the human environment. We recommend that the Commission Order contain a finding of no significant impact and include the following mitigation measures as conditions to any Certificate/authorization the Commission may issue.

1. Northwest shall follow the construction procedures and mitigation measures described in its application and supplements (including responses to staff data requests) and as identified in the EA, unless modified by the Order. Northwest must:

    a. request any modification to these procedures, measures, or conditions in a filing with the Secretary;
    b. justify each modification relative to site-specific conditions;
    c. explain how that modification provides an equal or greater level of environmental protection than the original measure; and
    d. receive approval in writing from the Director of OEP before using that modification.

2. The Director of OEP, or the Director's designee, has delegated authority to address any requests for approvals or authorizations necessary to carry out the conditions of the Order, and take whatever steps are necessary to ensure the protection of all environmental resources during abandonment, construction, and operation of the Project. This authority shall allow:

    a. the modification of conditions of the Order;
    b. stop-work authority; and
    c. the imposition of any additional measures deemed necessary to ensure continued compliance with the intent of the conditions of the Order as well as the avoidance or mitigation of adverse environmental impact resulting from Project abandonment activities, construction, and operation.

3. **Prior to any construction**, Northwest shall file an affirmative statement with the Secretary, certified by a senior company official, that all company personnel, EIs, and contractor personnel will be informed of the EI's authority and have been or will be trained on the implementation of the environmental mitigation measures appropriate to their jobs **before** becoming involved with construction and restoration activities.

4. The authorized facility locations shall be as shown in the EA, as supplemented by filed alignment sheets. **As soon as they are available, and before the start of construction**, Northwest shall file with the Secretary any revised detailed survey alignment maps/sheets

at a scale not smaller than 1:6,000 with station positions for all facilities approved by the Order. All requests for modifications of environmental conditions of the Order or site-specific clearances must be written and must reference locations designated on these alignment maps/sheets.

Northwest's exercise of eminent domain authority granted under NGA section 7(h) in any condemnation proceedings related to the Order must be consistent with these authorized facilities and locations. Northwest's right of eminent domain granted under NGA section 7(h) does not authorize it to increase the size of its natural gas pipeline to accommodate future needs or to acquire a right-of-way for a pipeline to transport a commodity other than natural gas.

5. Northwest shall file with the Secretary detailed alignment maps/sheets and aerial photographs at a scale not smaller than 1:6,000 identifying all route realignments or facility relocations, and staging areas, pipe storage yards, new access roads, and other areas that would be used or disturbed and have not been previously identified in filings with the Secretary. Approval for each of these areas must be explicitly requested in writing. For each area, the request must include a description of the existing land use/cover type, documentation of landowner approval, whether any cultural resources or federally listed threatened or endangered species would be affected, and whether any other environmentally sensitive areas are within or abutting the area. All areas shall be clearly identified on the maps/sheets/aerial photographs. Each area must be approved in writing by the Director of OEP **before construction in or near that area**.

   This requirement does not apply to extra workspace allowed by the Commission's Plan and/or minor field realignments per landowner needs and requirements which do not affect other landowners or sensitive environmental areas such as wetlands.

   Examples of alterations requiring approval include all route realignments and facility location changes resulting from:

   a. implementation of cultural resources mitigation measures;
   b. implementation of endangered, threatened, or special concern species mitigation measures;
   c. recommendations by state regulatory authorities; and
   d. agreements with individual landowners that affect other landowners or could affect sensitive environmental areas.

6. **At least 60 days before construction begins**, Northwest shall file an Implementation Plan with the Secretary for review and written approval by the Director of OEP. Northwest must file revisions to the plan as schedules change. The plan shall identify:

a. how Northwest will implement the construction procedures and mitigation measures described in its application and supplements (including responses to staff data requests), identified in the EA, and required by the Order;
b. how Northwest will incorporate these requirements into the contract bid documents, construction contracts (especially penalty clauses and specifications), and construction drawings so that the mitigation required at each site is clear to onsite construction and inspection personnel;
c. how Northwest will ensure that sufficient personnel are available to implement the environmental mitigation;
d. company personnel, including EIs and contractors, who will receive copies of the appropriate material;
e. the location and dates of the environmental compliance training and instructions Northwest will give to all personnel involved with construction and restoration (initial and refresher training as the Project progresses and personnel change);
f. the company personnel (if known) and specific portion of Northwest's organization having responsibility for compliance;
g. the procedures (including use of contract penalties) Northwest will follow if noncompliance occurs; and
h. for each discrete facility, a Gantt or PERT chart (or similar Project scheduling diagram), and dates for:

    (1) the completion of all required surveys and reports;
    (2) the environmental compliance training of onsite personnel;
    (3) the start of construction; and
    (4) the start and completion of restoration.

7. Northwest shall employ at least one EI for the Project. The EI shall be:

a. responsible for monitoring and ensuring compliance with all mitigation measures required by the Order and other grants, permits, certificates, or other authorizing documents;
b. responsible for evaluating the construction contractor's implementation of the environmental mitigation measures required in the contract (see condition 6 above) and any other authorizing document;
c. empowered to order correction of acts that violate the environmental conditions of the Order, and any other authorizing document;
d. a full-time position, separate from all other activity inspectors;
e. responsible for documenting compliance with the environmental conditions of the Order, as well as any environmental conditions/permit requirements imposed by other federal, state, or local agencies; and
f. responsible for maintaining status reports.

8. Beginning with the filing of its Implementation Plan, Northwest shall file updated status reports with the Secretary on a **biweekly basis until all construction and restoration activities are complete**. On request, these status reports will also be provided to other federal and state agencies with permitting responsibilities. Status reports shall include:

    a. an update on Northwest's efforts to obtain the necessary federal authorizations;
    b. the construction status of the Project, work planned for the following reporting period, and any schedule changes for stream crossings or work in other environmentally sensitive areas;
    c. a listing of all problems encountered and each instance of noncompliance observed by the EIs during the reporting period (both for the conditions imposed by the Commission and any environmental conditions/permit requirements imposed by other federal, state, or local agencies);
    d. a description of the corrective actions implemented in response to all instances of noncompliance, and their cost;
    e. the effectiveness of all corrective actions implemented;
    f. a description of any landowner/resident complaints which may relate to compliance with the requirements of the Order, and the measures taken to satisfy their concerns; and
    g. copies of any correspondence received by Northwest from other federal, state, or local permitting agencies concerning instances of noncompliance, and Northwest's response.

9. Northwest must receive written authorization from the Director of OEP **before commencing abandonment activities or construction of any Project facilities**. To obtain such authorization, Northwest must file with the Secretary documentation that it has received all applicable authorizations required under federal law (or evidence of waiver thereof).

10. Northwest must receive written authorization from the Director of OEP **before placing the Project into service**. Such authorization will only be granted following a determination that rehabilitation and restoration of the right-of-way and other areas affected by the project are proceeding satisfactorily.

11. **Within 30 days of placing the authorized facilities in service**, Northwest shall file an affirmative statement with the Secretary, certified by a senior company official:

    a. that the facilities have been constructed in compliance with all applicable conditions, and that continuing activities will be consistent with all applicable conditions; or
    b. identifying which of the Order conditions Northwest has complied with or will comply with. This statement shall also identify any areas affected by the Project where compliance measures were not properly implemented, if not previously identified in filed status reports, and the reason for noncompliance.

12. Northwest **shall not begin** construction or abandonment activities and/or use of any work areas until:

    a. the FERC staff receive comments from the USFWS and NMFS regarding the proposed action;
    b. the FERC staff completes Section 7 consultation with the USFWS and NMFS; and
    c. Northwest has received written notification from the Director of the OEP that construction or use of mitigation (including implementation of any conservation measures) may begin.

13. Northwest shall **not begin construction** of the Project until it files with the Secretary a copy of the determination of consistency with the Coastal Zone Management Plan issued by the WDOE.

E. References

Binford, L.C., B.G. Elliott, and S.W. Singer. 1975. Discovery of a Nest and the Downy Young of the Marbled Murrelet. *The Wilson Bulletin* 87:303–440.

Bohannon, J.S., D.R. Gay, M.P. Hayes, C.D. Danilson and K.I. Warheit. 2016. Discovery of the Oregon Spotted Frog in the Northern Puget Sound Basin, Washington State. Northwestern Naturalist 97:82-97.

Council on Environmental Quality. 2015. Guidance on Consideration of Past Actions in Cumulative Effects Analysis. June 24, 2005.

Golder Associates Inc. 2004. Report On Capacity Replacement Project, HDD Geotechnical and Feasibility Assessment, Whatcom, Skagit, Snohomish, Pierce, and Thurston Counties, Washington: submitted to Northwest Pipeline Corporation, Salt Lake City, UT, June 8, 2004.

……., 2014. MP 1468.2 North Fork Nooksack River Crossing, Updated Hydrotechnical Engineering Evaluation of Erosion and Scour Risk, Whatcom County, Washington, May 29, 2014

……., 2016. Hydrotechnical Assessment of Channel Migration for the Northwest Pipeline LLC. (MP 1468.2) North Fork Nooksack River Pipeline Crossing near Deming, Washington, May 27, 2016

Hallock, L. 2013. Draft State of Washington Oregon Spotted Frog Recovery Plan. Washington Department of Fish and Wildlife, Olympia.

Hamer, T.E., and S.K. Nelson. 1998. Effects of Disturbance on Nesting Marbled Murrelets: summary of preliminary results. Unpublished report, Hamer Environmental, Mount Vernon, Washington, prepared for for U.S. Fish and Wildlife Service, Portland, OR.

Hamer Environmental. 2017 Marbled Murrelet Habitat Assessment for the North Fork Nooksack Project. Unpublished Report for Edge Environmental, Inc. Lakewood, CO.

Larsen, T. and W.J. Ripple. 2006. Modeling Gray Wolf (*Canis lupus*) Habitat in the Pacific Northwest, USA. Journal of Conservation Planning 17–33.

Leonard, W.P., H.A. Brown, L.L.C. Jones, K.R. McAllister, and R.M. Storm. 1993. Amphibians of Washington and Oregon. Seattle Audubon Society. Seattle, Washington.

Marshall, D.B. 1988a. The Marbled Murrelet Joins the Old-Growth Forest Conflict. American Birds 42: 202-212.

Marshall, D.B. 1988b. Status of the Marbled Murrelet in North America with a Special Emphasis on Populations in California, Oregon, and Washington. U.S. Fish and Wildlife Service Biological Report 88(30).

Naslund, N.L. 1993. Why Do Marbled Murrelets Attend Old-Growth Forest Nesting Areas Year-Round? The Auk 110: 594–602.

National Marine Fisheries Service. 2005a. Endangered and Threatened Species: Final Listing Determinations for 16 ESUs of West Coast Salmon, and Final 4(d) Protective Regulations for Threatened Salmonid ESUs. Federal Register 70(123): 37160-37204.

National Park Service. 2016. Nationwide Rivers Inventory (NRI) Interactive Map Server, Oregon Segments. http://www.nps.gov/ncrc/programs/rtca/nri/states/or2.html. Accessed in February 2017.

…….. 2017. Accessed at https://www.nps.gov/nhl/find/statelists/wa.htm. Accessed in February

Natural Resource Conservation Service (NRCS). 2016. Web Based Soil Survey. Whatcom County Area (WA673). Accessed in January 2017 at: http://websoilsurvey.nrcs.usda.gov/app/WebSoilSurvey.aspx

……. 1992. Soil Survey of Whatcom County Area, Washington. U.S. Department of Agriculture.

Newcombe, C.P. and J.O.T. Jensen. 1996. Channel Suspended Sediment and Fisheries: A Synthesis for Quantitative Assessment of Risk and Impact. North American Journal of Fisheries Management 16(4): 693–727.

Pauley, G.B., B.M. Bortz, and M.F. Shepard. 1986. Species Profiles, Life Histories and Environmental Requirements of Coastal Fishes and Invertebrates (Pacific Northwest) – Steelhead Trout. U.S. Fish and Wildlife Service Biological Report 82 (11.116).

Raphael, M.G., G.A. Falxa, D. Lynch, S.K. Nelson, S.F. Pearson, A.J. Shirk, and R.D. Young. 2016. Status and trend of nesting habitat for the Marbled Murrelet under the northwest Forest Plan. Chapter 2, in Falxa, G.A. and M.G. Raphael (tech. eds.), 2016: Northwest Forest Plan—the first 20 years (1994-2013): Status and trend of Marbled Murrelet populations and nesting habitat. Gen. Tech. Rep. PNW-GTR-933. Portland, OR: U.S. Department of Agriculture, Forest Service, Pacific Northwest Research Station. 132 p.s.

Stinson, D. W. 2016. Periodic status review for the Streaked Horned Lark in Washington. Washington Department of Fish and Wildlife, Olympia, Washington. Available online: http://wdfw.wa.gov/publications/01774/wdfw01774.pdf

U.S. Fish and Wildlife Service. 1997. Recovery Plan for the Threatened Marbled Murrelet (*Brachyramphus marmoratus*) in Washington, Oregon, and California. Portland, OR.

……. 2004. Species Fact Sheet, Pacific lamprey (*Lampetra tridentate*). Available online: https://www.fws.gov/wafwo/species/fact%20sheets/pacific_lamprey_final.pdf.

……. 2012. Guidance for Identifying Marbled Murrelet Nest Trees in Washington State. U.S. Fish and Wildlife Service, Washington Fish and Wildlife Office (WFWO). Lacey, Washington. April.

……. 2007. Yellow-billed Cuckoo, Western Distinct Population Segment. U.S. Fish and Wildlife Service, Species Assessment and Listing Priority Assignment Form, Sacramento Field Office, Sacramento, California.

……. 2011a. Endangered and Threatened Wildlife and Plants; Revised Critical Habitat for the Marbled Murrelet; Final Rule. Federal Register 76(193): 61599– 61621.

……. 2011b. Yellow-billed Cuckoo. U.S. Fish and Wildlife Service ies Assessment and Listing Priority Assignment Form. Region 8 (California/Nevada Region).

…….2011c. North American Wolverine. U.S. Fish and Wildlife Service Species Assessment and Listing Priority Assignment Form. Region 6 (Mountain-Prairie Region).

……. 2011d. Oregon Spotted Frog - Species Assessment and Listing Priority Form. U.S. Fish and Wildlife Service, Pacific Region 1.

……. 2012. Guidance for Identifying Marbled Murrelet Nest Trees in Washington State. U.S. Fish and Wildlife Service, Washington Fish and Wildlife Office (WFWO). Lacey, Washington. April.

U.S. Geological Survey. 1994. Ground Water Atlas of the United States, Idaho, Oregon and Washington. HA 730-H.

……. 2002. National Seismic Hazard Mapping Project. http://eqint.cr.usgs.gov/deaggint/2002/index.php

……. 2003. Earthquake History of Washington: Earthquake Hazards Program. 2003. Last modified on August 5, 2003. http://earthquake.usgs.gov/earthquakes/states/?old=washington/washington_history.html

……. 2017. National Water Information System. USGS 12208000 Middle Fork Nooksack River Near Deming, WA. https://nwis.waterdata.usgs.gov/wa/nwis/inventory/?site_no=12208000&agency_cd=USGS. Accessed in February.

Washington Department of Ecology. 2016. Water Quality Atlas – Assessed Waters Mapping Tool. http://www.ecy.wa.gov/programs/wq/303d/. Accessed February 2017.

……. 2016e. Water Resource Inventory Areas: Learn about your watershed. Accessed at http://www.ecy.wa.gov/water/wria/index.html. Accessed in February 2017.

……... 2017. Water Quality Monitoring Station 01A120 – Nooksack R @ No Cedarville. River and Stream Water Quality Monitoring. data available at

Washington Department of Fish and Wildlife. 2000. Bull Trout and Dolly Varden Management Plan. Washington Department of Fish Wildlife, Fish Program, Olympia, WA

……. 2016. Periodic Status Review for the Marbled Murrelet in Washington. October. Available online: http://wdfw.wa.gov/commission/meetings/2016/11/nov0416_5_summary_murrelet.pdf.

……. 2017. State Listed Species: Revised February 2017. Available online: wdfw.wa.gov/conservation/endangered/state_listed_species.pdf.

Washington Department of Health, Environmental Health Division. 2017. Source Water Assessment Program, SWAP GIS Mapping Tool, Whatcom County. Office of Drinking Water. Accessed at https://fortress.wa.gov/doh/eh/dw/swap/maps/default.cfm?action=maps.

Washington State Department of Transportation. 2017. Accessed at February 2017: https://www.wsdot.wa.gov/LocalPrograms/ScenicByways/Map.htm

The Watershed Company. 2016. Northwest Pipeline, LLC North Fork Nooksack River Line Lowering Project – Habitat Assessment Report. The Watershed Company, Kirkland, WA.

……. 2017. Wetland and Waterbody Delineation Report: Northwest Pipeline LLC, North Fork Nooksack Line Lowering Project. January.

Wydoski, R.S., and R.R. Whitney. 1979. Inland Fishes of Washington. University of Washington Press, Seattle, Washington.

F. List of Preparers

Cotton, Douglas – **Project Manager**, Project Description, Land Use, Cumulative Impacts, Alternatives

M.S., Urban & Regional Planning, 1980. University of Wisconsin-Madison

B.A., Geography, 1977. University of Massachusetts-Amherst

Howard, Eric – Cultural Resources

M.A., Anthropology, 1998. University of Tennessee

B.A., Anthropology, 1992. University of Tennessee

Rodgers, Keith – Soils, Geology, and Groundwater

M.E., Water Resources, 2008. University of Arizona

B.S., Geological Sciences with Geochemistry Option, 2004. Virginia Technical University

Yuan, Julia – Water Resources and Biology

M.P.S., Natural Resources Management, 2003. State University of New York College of Environmental Science and Forestry

B.S., Environmental Biology/Forestry, 1999. State University of New York College of Environmental Science and Forestry

Warn, Kenneth – Air Quality and Noise, Reliability and Safety

M.P.P., Environmental Policy, 2005. George Washington University

M.S., Chemical Engineering, 1995. Lehigh University

B.S., Chemical Engineering, 1992. Colorado School of Min

APPENDIX A

ENVIRONMENTAL ALIGNMENT SHEET

Legal Location	Section 32, T39N, R5E	Section 5, T38N, R5E	Legal Location
Ownership / Management	Mt. Baker Hwy CR-542	Rutsatz Rd.	Ownership / Management
Wetland / Waterbody	Wetland D, Wetland G, Wetland K, Wetland G, Stream G, Stream I, Wetland G, Jim Creek (Stream D), Wetland C, Stream C, Wetland A, Stream B, N. Fork Nooksack River (Stream A), Wetland I		Wetland / Waterbody
Trench Crossing Method	Dry Open-Cut		Trench Crossing Method
Topsoil Salvage	Within TEWA's 01, 03, 05, and 07 where grading is necessary, repeated heavy equipment traffic or where surfaces are stabilized with gravel; Trenchline Only		Topsoil Salvage
Seed Mix	1 & 2; 1 & 3; 1; 1 & 3; 1		Seed Mix

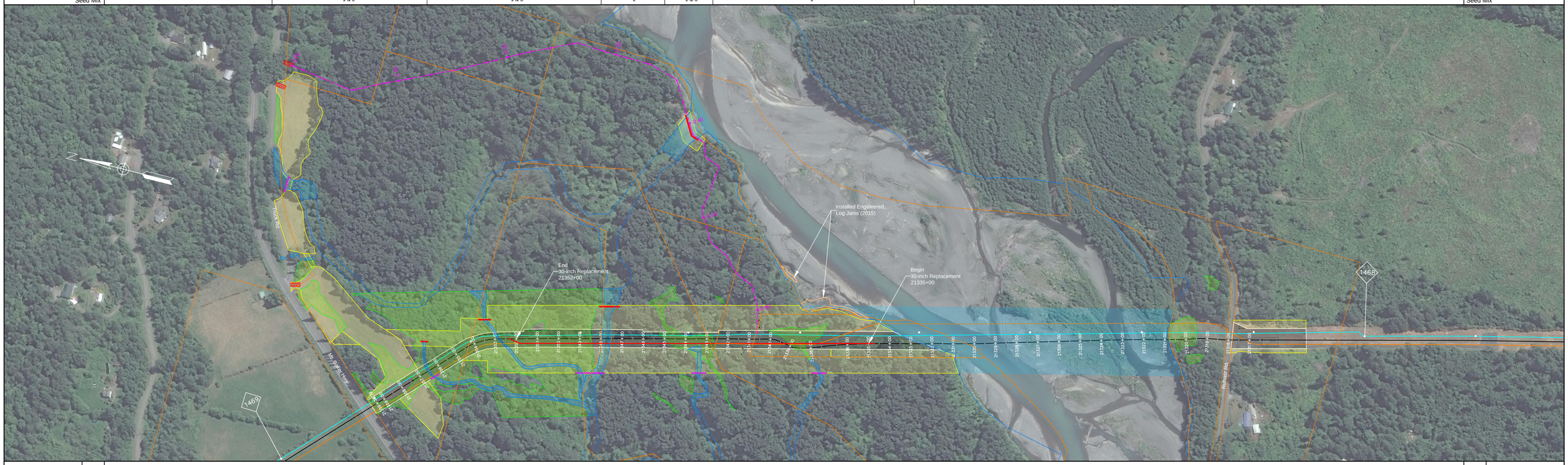

Environmental Schematic
(NOT TO SCALE - See Photo Band for Actual Survey)

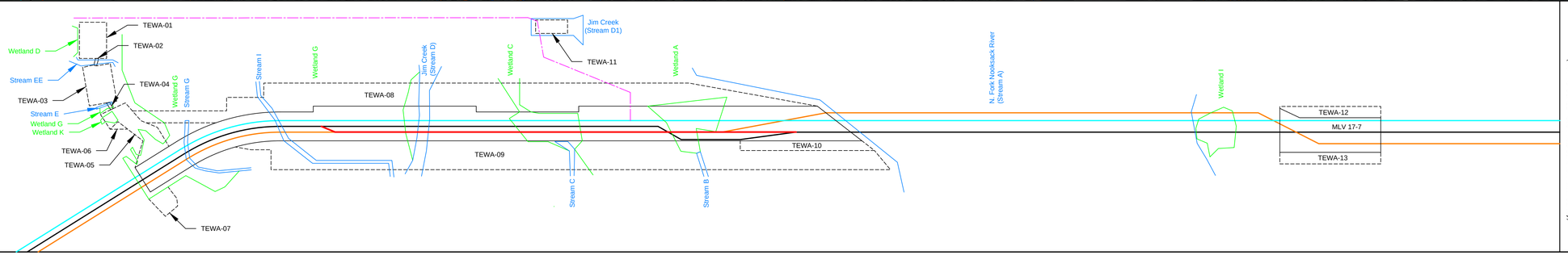

Environmental Schematic
(NOT TO SCALE - See Photo Band for Actual Survey)

APPROVED FOR PERMITTING
_DD_ 04-04-17

NOTES:

1: Erosion and sediment control placement per ECRP and as directed by EI.
2: In wetlands, cut vegetation off at ground level, leaving existing root systems in place and remove the vegetation from the wetland for disposal.
3: In wetlands, limit pulling of tree stumps and grading activities to directly over the trench line. Do not grade or remove stumps or root systems from the rest of the construction right-of-way or TEWAs.
4: In wetlands, segregate the top one foot of topsoil from the trench line, except in areas where standing water or saturated soils are present.
5: Topsoil will be salvaged as shown on this alignment sheet.
6: If streams proposed to be dry open cut (i.e. flume, dam & pump, etc.) are not flowing at the time of construction, they will be open cut.
7: Right-of-way grading or vegetation clearing as necessary.
8: Seed mixes in the ECRP or according to landowner agreements or as directed by EI.
9: No refueling within 100 feet of a wetland or waterbody.
10: See Figures 1.3-2 and 1.3-3 for MLVs 17-7 and 17-8.

LEGEND

- 30-inch Existing 1401 Pipeline
- 30-inch Replacement 1401 Pipeline
- 26-inch Existing 1400 Pipeline
- 36-Inch Existing 1408 Pipeline

Construction Right-of-Way
- Construction Right-of-Way (Shown white on photography)
- Temporary Extra Work Area
- Tax Parcel Boundaries
- Access Road
- Wetland (2016 Survey)
- Waterbody (2016 Survey)
- Waterbody (photo-interpreted)
- Construction Entrance Pad
- Block Net (Placement to be determined by EI)
- Coffer Dam (Placement to be determined by EI)

REVISIONS

NO.	DATE	BY	DESCRIPTION	W.O. NO.	CHK.	APP.
0	06-APR-2017	EE	Issued for FERC Filing and Permitting		DD	DD

200 0 200 400 600 FEET

NORTHWEST PIPELINE LLC
NORTH FORK NOOKSACK
LINE LOWERING PROJECT

30-INCH PIPE REPLACEMENT
M.P. 1468.46 TO M.P. 1468.78
ENVIRONMENTAL ALIGNMENT

WHATCOM COUNTY, WA

DRAWN BY: EE	DATE: 14-MAR-2017	ISSUED FOR BID:	24x36 SCALE:1 Inch = 200 Feet
CHECKED BY: EE	DATE: 14-MAR-2017	ISSUED FOR CONSTRUCTION:	11x17 SCALE:1 Inch = 450 Feet
APPROVED BY: EE	DATE: 14-MAR-2017	DRAWING NUMBER: 1401.29-0001	SHEET 1 OF 1

APPENDIX B

SITE PLAN AND PROFILE

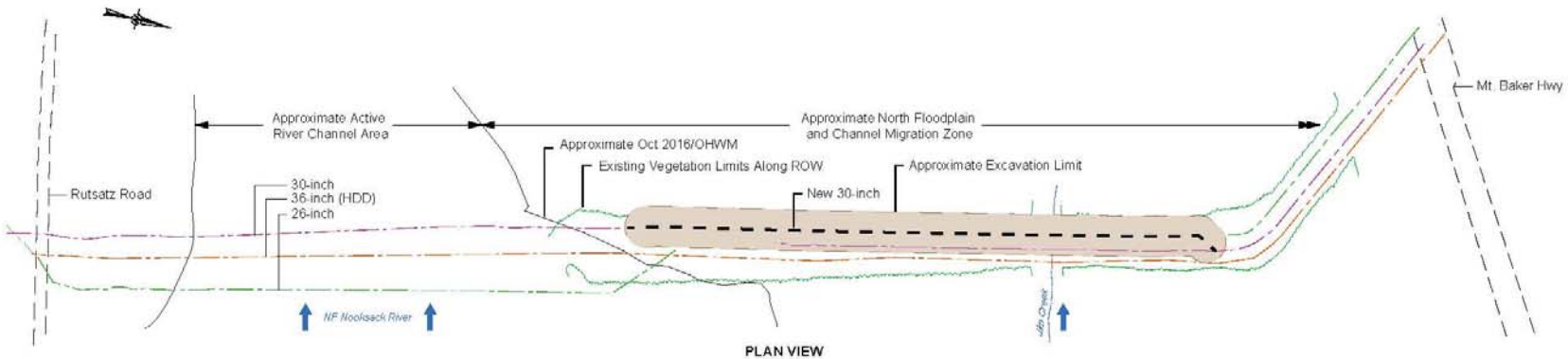

PLAN VIEW

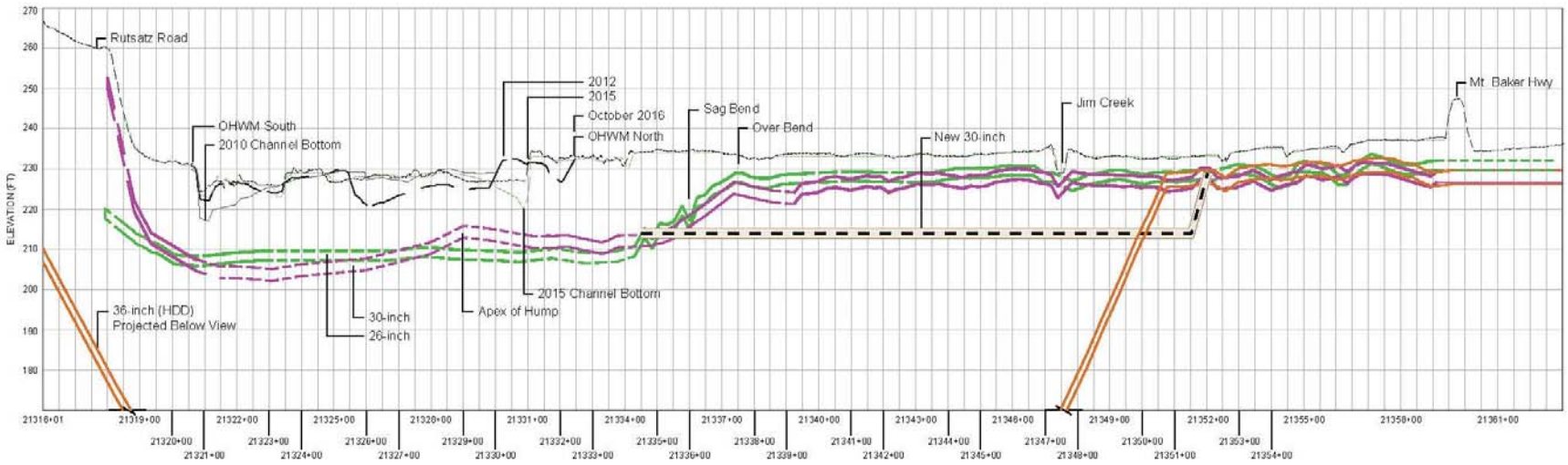

PROFILE (ALONG 30 INCH PIPELINE)

NOTE: PIPELINE PLAN AND PROFILE ARE APPROXIMATE IN THIS SCHEMATIC VIEW

NOT TO SCALE

CLIENT

WILLIAMS NORTHWEST PIPELINE

CONSULTANT

Golder Associates

YYYY-MM-DD	2017-02-28
PREPARED	REDMOND
DESIGN	AMP
REVIEW	AQK
APPROVED	AQK

PROJECT

NORTH FORK NOOKSACK
30-INCH PIPELINE LOWERING PROJECT
WHATCOM COUNTY, WA

TITLE

SITE PLAN/PROFILE VIEW

PROJECT No.	PHASE	Rev.
10393178X07	003	F

APPENDIX C

BIOLOGICAL ASSESSMENT AND

ESSENTIAL FISH HABITAT ASSESSMENT

Biological Assessment
and
Essential Fish Habitat Assessment

North Fork Nooksack Line Lowering Project

Northwest Pipeline, LLC
Docket No. CP17-133

November 2017

Federal Energy Regulatory Commission
Office of Energy Projects
Washington, DC 20426

Table of Contents

1.0 Introduction ... 1
1.1 Background ... 1
1.2 Project Location ... 2
1.3 Project Setting ... 4
1.4 Permits, Approvals and Regulatory Requirements ... 10
2.0 ESA Listed Species ... 11
2.1 Species List and Consultation History ... 11
2.2 Species with Essential Fish Habitat ... 11
3.0 Project Description ... 12
3.1 Purpose and Need ... 12
3.2 Schedule ... 12
3.3 Project Design ... 12
3.4 Land Requirements ... 13
3.4.1 Pipeline Facilities ... 13
3.4.2 Aboveground Facilities ... 15
3.4.3 Access Roads ... 15
3.4.4 Pipe Storage and Contractor Yard ... 15
3.5 Construction Procedures ... 15
4.0 Action Area ... 17
4.1 Aquatic Action Area ... 17
4.2 Terrestrial Action Area ... 18
5.0 Species' Accounts, Critical Habitat, Project Effects and Determinations of Effect ... 19
5.1 Determinations of No Effect ... 20
5.1.1 Gray Wolf ... 20
5.1.2 Streaked Horned Lark ... 21
5.1.3 Yellow-billed Cuckoo ... 22
5.1.4 North American Wolverine ... 22
5.2 Determinations of Effect ... 23
5.2.1 Marbled Murrelet ... 23
5.2.1.1 Species Account and Critical Habitat ... 23
5.2.1.2 Environmental Baseline ... 25
5.2.1.3 Environmental Effects ... 27
5.2.1.4 Conservation Measures ... 29
5.2.1.5 Determination of Effects ... 30
5.2.2 Oregon Spotted Frog ... 31
5.2.2.1 Species Account and Critical Habitat ... 31
5.2.2.2 Environmental Baseline ... 33
5.2.2.3 Environmental Effects ... 33
5.2.2.4 Conservation Measures ... 37
5.2.2.5 Determination of Effects ... 37
5.2.3 Chinook Salmon ... 38
5.2.3.1 Species Account and Critical Habitat ... 38
5.2.3.2 Environmental Baseline ... 43
5.2.3.3 Environmental Effects ... 44
5.2.3.4 Conservation Measures ... 52

5.2.3.5 Determination of Effects ... 54
5.2.4 Steelhead ... 55
5.2.4.1 Species Account and Critical Habitat ... 55
5.2.4.2 Environmental Baseline ... 58
5.2.4.3 Environmental Effects ... 59
5.2.4.4 Conservation Measures ... 66
5.2.4.5 Determination of Effects ... 67
5.2.5 Bull trout ... 68
5.2.5.1 Species Account and Critical Habitat ... 68
5.2.5.2 Environmental Baseline ... 72
5.2.5.3 Environmental Effects ... 73
5.2.5.4 Conservation Measures ... 79
5.2.5.5 Determination of Effects ... 80
6.0 Essential Fish Habitat ... 81
6.1 Other EFH Species ... 82
6.2 Effects to Essential Fish Habitat ... 85
6.3 EFH Effects Determination ... 87
7.0 References ... 88

List of Figures

Figure 1.2-1 General Location Map ... 3
Figure 1.3-1 Average Monthly Discharge (cubic feet per second, cfs) in the NF Nooksack Reported near Glacier, Washington (USGS Gage 12205000) and in the MF Nooksack (USGS Gage 12208000) During the Same Period, 1992 through 2015 6
Figure 1.3-2 Average Water Temperature in the NF Nooksack Reported near Glacier, Washington (USGS Gage 12205000) from 2008 through 2015. Dashed Lines show Maximum and Minimum Monthly Temperatures during the Period of Record ... 7
Figure 1.3-3 Comparison of Average Monthly Water Temperature in the NF Nooksack from 2008 through 2014 (Solid Line) to Average Monthly Temperatures Observed in 2015 (Dashed Line) ... 8
Figure 1.3-4 Average Monthly Turbidity (measured in FNU) in the MF Nooksack (USGS Station 12208000) from November 2013 through November 2016 (Solid Line) with monthly extremes (upper and lower dashed lines) ... 9
Figure 5.2-1 Population Estimate (± 95% Confidence Intervals) of Marbled Murrelets in Conservation Zone 1 (Puget Sound) with a Significant Declining Trend (P<0.05) from 2001 through 2013 (source: Falxa et al., 2016) ... 25
Figure 5.2-2 Approximate Timing of Winter-run and Fall-run Chinook Salmon in the Nooksack Sub-basin ... 41
Figure 5.2-3 Estimates of Spring-Run Chinook Salmon Escapement for the NF Nooksack and MF Nooksack Populations, 1984 to 2012 ... 42
Figure 5.2-4 Severity of Effects (SEV) for Salmonids Applying the Newcombe and Jensen (1996) Model 1 for Different Total Suspended Solid (TSS) Concentrations and Exposure Durations Ranging from 1 hour to 72 hours ... 49
Figure 5.2-5 Approximate Timing of Winter-run and Summer-run Steelhead Use in the Nooksack Sub-basin ... 57

Figure 5.2-6 Approximate Timing of Bull Trout Use in the Nooksack Sub-basin 70
Figure 6.1-1 Approximate Timing of Coho Salmon Use in the Nooksack Sub-basin 82
Figure 6.1-2 Estimates of Coho Escapement for the Nooksack River Basin from 1965 through 2012..... 84
Figure 6.1-3 Approximate Timing of Pink Salmon (Odd Year) Use in the Nooksack River Sub-basin..... 85
Figure 6.1-4 Estimates of Pink Salmon (odd-year) Spawner Abundance in the Nooksack River from 1967 through 2011 85

List of Tables

Table 1.3-1 Vegetation Cover Types and Corresponding Wildlife Habitat Categories Mapped within the Project Area 4
Table 1.4-1 Permits and Approvals Necessary for Construction and Operation 10
Table 3.4-1 Land Requirements for Project Construction 14
Table 4.2-1 Average Maximum Noise (Lmax) at 50 feet from Construction Equipment and Distances to Attenuate to Assumed Ambient Levels (WSDOT, 2011a)..... 19
Table 5.2-1 The Extent of Habitats (stream miles) Utilized by Fall-run and Spring-Run Chinook Salmon in the Nooksack River-Frontal Bellingham Bay 5th Field Watershed..... 41
Table 5.2-2 The Extent (stream miles) of Fall Chinook Salmon Migration, Spawning, and/or Rearing Habitats in the Nooksack Sub-basin (HUC 17110004) in Comparison to Assumed Extent of Habitats in Jim Creek 45
Table 5.2-3 Estimates of Discharge (cfs) and Velocity (ft/s) in Jim Creek at Different Stream Depths and Pump Rates (gpm) Required to Sustain the Discharge or Velocity... 48
Table 5.2-4 The Extent of Habitats (stream miles) Utilized by Winter-run and Summer-Run Steelhead in the Nooksack River-Frontal Bellingham Bay 5th Field Watershed.. 58
Table 5.2-5 The Extent (stream miles) of Winter Steelhead Migration, Spawning, and/or Rearing Habitats in the Nooksack Sub-basin (HUC 17110004) in Comparison to Assumed Extent of Habitats in Jim Creek 62
Table 5.2-6 The Extent (stream miles) of Bull Trout Migration, Spawning, and/or Rearing Habitats in the Nooksack Sub-basin (HUC 17110004) in Comparison to Assumed Extent of Habitats in Jim Creek 75
Table 6.1-1 The Extent (stream miles) of Coho Salmon Migration, Spawning, and/or Rearing Habitats in the Nooksack Sub-basin (HUC 17110004) in Comparison to Assumed Extent of Habitats in Jim Creek 83

List of Appendices

Attachment A Erosion Control and Revegetation Plan (ECRP)
Attachment B Spill Plan for Oil and Hazardous Materials
Attachment C Fish Exclusion and Relocation Plan
Attachment D Marbled Murrelet Habitat Assessment for the NF Nooksack Project
Attachment E Oregon Spotted Frog Habitat Analysis

List of Abbreviations

AIP	abandoned in place
AMSL	above mean sea level
BA	Biological Assessment
BBS	Breeding Bird Survey
BMP	best management practice
cfs	cubic feet per second
CP	cathodic protection
dBA	decibels
dbh	diameter-at-breast-height
DPS	Distinct Population Segment
ECRP	Erosion Control and Revegetation Plan
EFH	Essential Fish Habitat
EI	Environmental Inspector
ELJ	Engineered Log Jam
EPA	Environmental Protection Agency
ES	engineering station
ESA	Endangered Species Act
ESU	Evolutionarily Significant Unit
FERC	Federal Energy Regulatory Commission
FMP	Fishery Management Plans
FNU	Formazin Nephelometric Units
FWS	U.S. Fish and Wildlife Service
GIS	geographic information system
GMU	Game Management Unit
GPM	gallons per minute
HUC	Hydrologic Unit Code
LWD	large woody debris
MLV	mainline valve
MF Nooksack	Middle Fork of the Nooksack River
mg/l	milligrams per liter
MP	milepost
NEPA	National Environmental Policy Act
NF Nooksack	North Fork of the Nooksack River
NMFS	National Marine Fisheries Service
Northwest	Northwest Pipeline LLC
NRM	Northern Rocky Mountain
PCE	Primary Constituent Element
PDS	Whatcom County Planning and Development Services
PFMC	Pacific Fishery Management Council
Project	North Fork Nooksack Line Lowering Project
RM	river mile
SEV	severity-of-ill-effects
SF Nooksack	South Fork of the Nooksack River
SOC	species of concern

Spill Plan	Spill Plan for Oil and Hazardous Substances
SR 9	Valley Highway
SR 542	Mount Baker Highway
SWPPP	Stormwater Pollution Prevention Plan
TEWA	temporary extra work area
TOP	top of pipe
TSS	Total Suspended Solids
USGS	U.S. Geological Survey
WDFW	Washington Department of Fish and Wildlife
WDNR	Washington Department of Natural Resources
WDOE	Washington Department of Ecology
WRIA	Water Resource Inventory Area
WSDOT	Washington State Department of Transportation

1.0 Introduction

1.1 Background

Pursuant to Section 7 of the Endangered Species Act (ESA), the Federal Energy Regulatory Commission (FERC or Commission) prepared this Biological Assessment (BA) to address effects of the Project on species listed under the ESA and their designated critical habitats. This BA is being submitted to the United States Department of the Interior, Fish and Wildlife Service (FWS) and the United States Department of Commerce, National Oceanic and Atmospheric Administration, National Marine Fisheries Service (NMFS). Our[1] effects determinations are presented for species under the jurisdiction of the NMFS and FWS. We request that the FWS and NMFS accept this BA, enter into formal consultations with the FERC, and formulate a Biological Opinion that determines whether or not the Project would jeopardize the continued existence of any federally listed or proposed threatened or endangered species or result in the destruction or adverse modification of designated critical habitat for those species.

The Magnuson-Stevens Fishery Conservation and Management Act (Magnuson-Stevens Act), which was reauthorized and amended in 1996, requires NMFS to recommend conservation and enhancement measures for any federal or state activity that may adversely affect Essential Fish Habitat (EFH). This BA also provides information for NMFS on potential effects to EFH, pursuant to Section 305(b) of the Magnuson-Stevens Act

On April 6, 2017, Northwest Pipeline LLC (Northwest), filed an application with the Commission for a Certificate of Public Convenience and Necessity (Certificate) pursuant to sections 7(b) and 7(c) of the Natural Gas Act (NGA). The Project would consist of the lowering by replacement of approximately 1,700 feet of 30-inch pipeline within the North Fork of the Nooksack River (NF Nooksack) valley in Whatcom County near Deming, Washington. The Project would also include removal of approximately 1,550 feet of previously abandoned in place 26-inch pipeline,[2] which would become exposed during the replacement of the 30-inch pipeline. The 30-inch pipeline would be replaced in the north floodplain of the NF Nooksack between mileposts (MPs) 1468.46 and 1468.78. The pipeline corridor at the NF Nooksack includes three existing pipelines: the abandoned in place 26-inch mainline that was abandoned in 2006; the 30-inch loop line (Line 1401) that was installed by an open trench method in 1971; and a 36-inch loop line (Line 1408) that was installed by a horizontal directional drill method as part of Northwest's Capacity Replacement Project (CRP) in 2006.

The Federal Energy Regulatory Commission (FERC) is the federal agency responsible for authorizing interstate natural gas transmission facilities, as specified in section 311(e)(1) of the Energy Policy Act of 2005 (EPAct) and the Natural Gas Act. For this Project, in accordance with section 313(b)(1) of the Energy Policy Act, FERC is the lead federal agency for the coordination of all applicable federal authorizations, and is also the lead federal agency for preparation of an environmental assessment in compliance with the requirements of the National Environmental Policy Act of 1969 (NEPA).

[1] The pronoun “we,” “us,” and “our” refer to the environmental staff of the FERC’s Office of Energy Projects.
[2] The 26-inch mainline was abandoned in place as part of the Capacity Replacement Project (Docket No. CP05-32).

Six species listed under the ESA are within the jurisdiction of the FWS and included in the agency's *Information for Planning and Conservation* (IPaC) system as potentially occurring within Whatcom County and the Project area. Listed species include the endangered gray wolf (*Canis lupus*) and the North American wolverine (*Gulo gulo luscus*) proposed for listing as threatened; and four threatened species including, marbled murrelet (*Brachyramphus marmoratus*), streaked horned lark (*Eremophila alpestris strigata),* yellow-billed cuckoo *(Coccyzus americanus*) and bull trout (*Salvelinus confluentus*). In addition, there is designated critical habitat for bull trout in the Project area (FWS, 2016a).

Northwest, acting as the FERC's non-federal representative for the purpose of complying with section 7(a)(2) of the ESA, engaged the FWS and NMFS starting in June 2016; the purpose of the meeting was to introduce the Project. During December 8 and 9, 2016, Northwest conducted additional interagency meetings for the Project, where FWS personnel introduced concern for the Oregon spotted frog (*Rana pretiosa*), which is also listed as threatened under the ESA with designated critical habitat in Whatcom County.

Two other threatened species, both with designated critical habitat, also occur in the Project area but are under NMFS' jurisdiction. They are Chinook salmon (*Oncorhynchus tshawytscha)* and steelhead (*Oncorhynchus mykiss*). Critical habitat for Chinook salmon in the Puget Sound Evolutionarily Significant Unit (ESU) was designated in 2005 (NMFS, 2005) and critical habitat for steelhead in the Puget Sound Distinct Population Segment (DPS) was designated in 2016 (NMFS, 2016a).

We have concluded, based on the documentation and analytical results contained herein, that the Project would have no effect on the gray wolf, North American wolverine, yellow-billed cuckoo, and streaked horned lark. We have also concluded that the Project may affect, but is not likely to adversely affect the marbled murrelet and Oregon spotted frog, and that the Project may affect and is likely to adversely the bull trout, Chinook salmon, and steelhead. Additionally, the Project is likely to adversely affect designated critical habitat for Coastal-Puget Sound DPS bull trout, designated critical habitat for Chinook salmon with the Puget Sound ESU, and designated critical habitat for steelhead with the Puget Sound DPS. Lastly, the Project may adversely affect freshwater Pacific Coast Salmon EFH.

1.2 Project Location

The Project would occur entirely within Whatcom County, Washington. The general location of the Project is shown on Figure 1.2-1. No aboveground facilities (e.g., launchers, receivers, valves, meter stations or compressor stations) would be installed, upgraded or modified for the Project. The Project is located in Section 5, Township 38 North, Range 5 East, approximately 1.2 miles southeast of Deming, Washington, in the north floodplain of the NF Nooksack, about 0.3 mile east of the intersection of Mt. Baker Highway (SR 542) and Valley Highway (SR 9). Figure 1.2-1 provides a detailed location map based on a 7.5-minute topographic quadrangle.

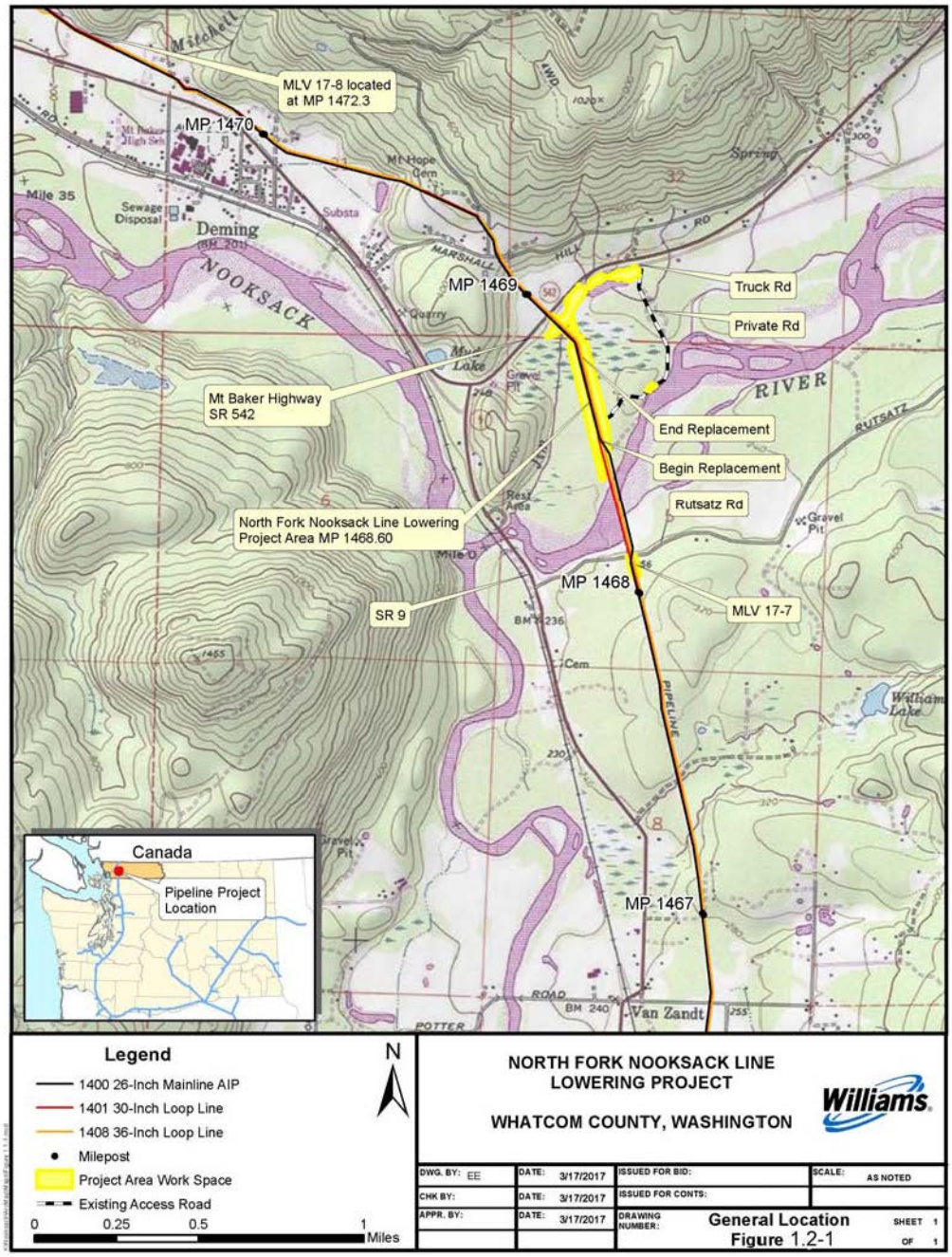

Figure 1.2-1
General Location Map

1.3 Project Setting

The Project is within the Puget Trough ecoregion coinciding with the Western Hemlock forest zone (Cassidy, 1991). Land cover in the area has been categorized primarily as wetlands, riparian and secondarily as open water by the Washington Gap land cover classification scheme (Cassidy, 1991). A small portion in the Project northern end is classified as a mix of agriculture and mixed hardwood/conifer forest.

The Project area includes the Nooksack River and floodplain and is entirely within the Nooksack River Watershed (Nooksack Sub-basin, HUC 17110004) which coincides with the Washington State Conservation Commission's Water Resource Inventory Area (WRIA) 1. Elevation is 240 feet or less. Forested types in the area include Westside Lowlands Conifer-Hardwood Forest and Westside Riparian-Wetlands. Non-forested vegetation in the area includes Herbaceous Wetlands and Agriculture, Pasture and Mixed Environs, all of which are interspersed with the Urban and Mixed Environs type (Johnson and O'Neill, 2001).

Terrestrial Conditions. Four general vegetation types are found in the Project area and include forest-woodland, riparian-wetlands, developed and open water (see Table 1.3-1). Descriptions of vegetation categories within the Project area are provided below.

Table 1.3-1
Vegetation Cover Types and Corresponding Wildlife Habitat Categories Mapped within the Project Area

General Vegetation Type	Mapped Vegetation/Habitat Category [1]
Forest-Woodland	Westside Lowlands Conifer-Hardwood Forest
Riparian and Wetlands	Westside Riparian-Wetlands
	Herbaceous Wetlands
Open Water	Open Water – Lakes, Rivers, and Streams
Developed	Urban and Mixed Environs
	Agriculture/Pasture
	Roads

[1] Source: Johnson and O'Neil, 2001

With the exception of the existing permanent easement, much of the landscape within the Project area is dominated by mixed conifer-hardwood forest and wetlands. Westside Lowlands Conifer-Hardwood Forest in the Project area is dominated by the following species: western hemlock (*Tsuga heterophylla*) and Douglas-fir (*Pseudotsuga menziesii*) on upland areas with bigleaf maple (*Acer macrophyllum*) and black cottonwood (*Populus balsamifera* ssp. *trichocarpa*) as deciduous components. Sitka spruce (*Picea sitchensis*), western redcedar (*Thuja plicata*) and grand fir (*Abies grandis*) are also present in forested habitat areas (The Watershed Company, 2016a).

Canopy cover is estimated at 75 percent cover on average and is characterized as closed. Large conifer trees occur in the Project vicinity and include trees that are 20 to 29 inches diameter-at-breast-height (dbh) as well as trees greater than 30 inches dbh. The largest conifer trees are primarily, although not exclusively, located from the point where Jim Creek crosses the

easement south to the north bank of the NF Nooksack and in the northwestern corner of the Project area (The Watershed Company, 2016a).

Forest understory consists of a dense shrub stratum. Common plants present include vine maple (*Acer circinatum*), salmonberry (*Rubus spectabilis*), snowberry (*Symphoricarpos* sp.), black twinberry (*Lonicera involucrata*), Indian plum (*Oemieria cerasiformis*) and stink currant (*Ribes bracteosum*), among others. Common herbaceous/groundcover species are sword fern (*Polystichum munitum*), common ladyfern (*Athyrium filix-femina*) and piggy-back plant (*Tolmiea menziesii*).

The forested wetland areas are a mix of red alder (*Alnus rubra*) and black cottonwood trees along with red-osier dogwood (*Cornus serecia*), salmonberry, swordfern, stink currant, with piggy-back plant, common ladyfern and creeping buttercup (*Ranunculus repens*) in the understory of some forested riparian zones and wetlands. Sitka spruce and western redcedar are also present infrequently in wetland areas that are less frequently inundated and/or saturated.

In general, wetland patches are dominated by immature red alder trees (4 to 14 inches dbh) with large cottonwood, western red cedar and sitka spruce also present to a lesser extent. The canopy is estimated as closed (70 to 100 percent canopy cover) with few openings where shrubs dominate. While some mature and old-growth individual trees are present, the forested areas do not meet the definitions provided by the Washington Department of Ecology (WDOE) for mature and old-growth forested wetlands (The Watershed Company, 2016a and 2016b).

Scrub-shrub wetlands in the Project area tend to be a mixture of vine maple, salmonberry and black twinberry, with common ladyfern and creeping buttercup below the shrub layer. Himalayan blackberry (*Rubus armeniacus*) is prevalent in the disturbed areas adjacent to the existing, maintained pipeline easement and patches of the invasive species Japanese knotweed (*Fallopia japonica*) occur along Jim Creek.

Palustrine emergent wetlands in the Project area support a variety of native and introduced species. Within the existing maintained pipeline easement, dominant wetland vegetation includes the following invasive species: reed canarygrass (*Phalaris arundinacea*), common rush (*Juncus effusus*), creeping buttercup, and other meadow grasses, with small-fruited bulrush (*Scirpus microcarpus*), various sedges (*Carex* spp) and cattails (*Typha* sp.) occasionally appearing in the more frequently flooded areas.

Aquatic Conditions. The Project is within the Nooksack River-Frontal Bellingham Bay 5th field watershed (HUC 1711000405), in the Nooksack Sub-basin (HUC 17110004). The Project area is bounded to the south by the NF Nooksack, and is approximately 0.6 mile upstream from the confluence of the Nooksack River, NF Nooksack and South Fork of the Nooksack River (SF Nooksack), and approximately 2.6 miles downstream from the confluence of the NF Nooksack and the Middle Fork of the Nooksack River (MF Nooksack). The NF Nooksack has been designated as Core Summer Salmonid Habitat for aquatic life use under State water quality standards. The current 303(d) listing of impaired waters does not show the NF Nooksack as impaired (WDOE, 2016).

Jim Creek is a tributary to the NF Nooksack and crosses the existing pipeline easement within the Project area. Headwaters of Jim Creek flow through a culvert under Truck Road and

SR 542, enter a depressional wetland (Wetland G, see The Watershed Company, 2016b), and disperse in ponded areas east of the Project area. In the existing pipeline easement, Jim Creek is also an active oxbow channel directly associated with the NF Nooksack (The Watershed Company, 2016b). During high water events, including annual floods, the dominant source of flow within Jim Creek, including the segment crossing the easement, comes from the NF Nooksack. Upstream segments of Jim Creek only flow during flood events while the segment of Jim Creek downstream, including the segment within the Project area, flows perennially (The Watershed Company, 2016b). However, there are no known records of stream flows in Jim Creek.

U.S. Geological Survey (USGS) has sampled stream flows upstream of the Project area in the MF Nooksack (USGS Gage 12205000), approximately 4.8 river miles upstream from the confluence with NF Nooksack, and in the NF Nooksack near Glacier, Washington, approximately 20 miles upstream from the Project area (USGS Gage 12208000, below Cascade Creek). The monthly hydrograph for average discharge at the two sites is similar, with the exception of summer flows in which the NF Nooksack is almost twice as much as the MF Nooksack (see Figure 1.3-1). It is likely that stream flows in the NF Nooksack at the Project area would be greater than both gage stations because water from the MF Nooksack combines with water from the NF Nooksack prior to entering the Project area.

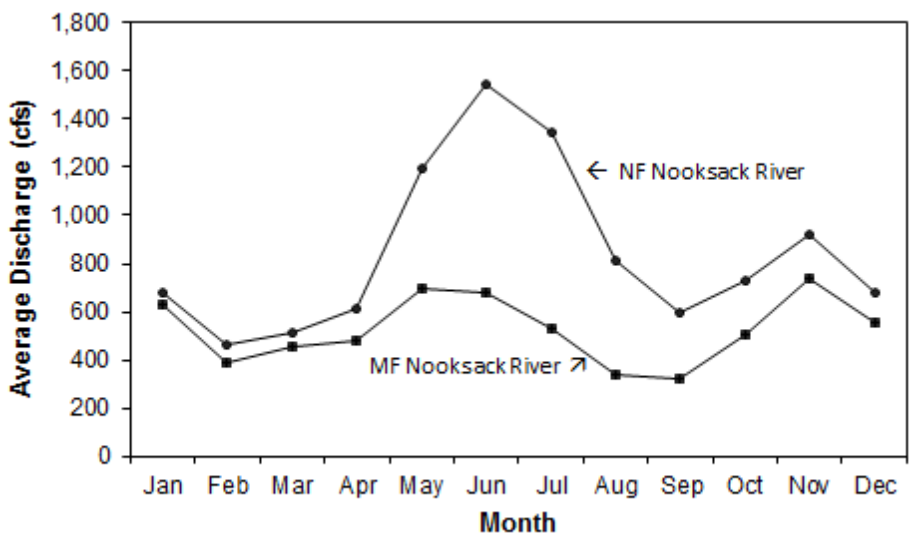

Figure 1.3-1
Average Monthly Discharge (cubic feet per second, cfs) in the NF Nooksack Reported near Glacier, Washington (USGS Gage 12205000) and in the MF Nooksack (USGS Gage 12208000) During the Same Period, 1992 through 2015

Water temperatures at the gage station on the NF Nooksack have been collected every month from 2008 through 2013. On average, temperatures in the NF Nooksack are cooler in the winter by approximately 10 to 15°F than summer temperatures (see Figure 1.3-2). Most variability in water temperatures occurs during summer months (see Figure 1.3-2).

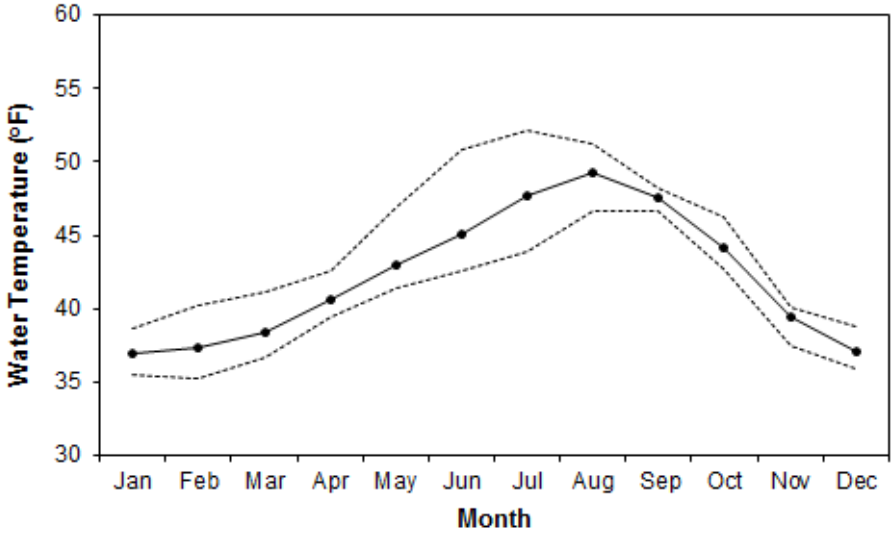

Figure 1.3-2
Average Water Temperature in the NF Nooksack Reported near Glacier, Washington (USGS Gage 12205000) from 2008 through 2015. Dashed Lines show Maximum and Minimum Monthly Temperatures during the Period of Record

WDOE (2017) measured water temperatures in the Nooksack River mainstem at North Cedarville (water quality monitoring station 01A120) approximately four miles west of Deming and downstream from the Project area, from 2001 through 2010. Seasonal maximum water temperatures measured between June/July through September indicate temperatures exceeding 60ºF during July and August and exceeding 65ºF most years during those months. This monitoring station is below the confluence of the NF Nooksack and South Fork (SF) Nooksack. The high water temperatures in the mainstem are influenced by high water temperatures from the SF Nooksack which peak during July and August, sometimes exceeding 65ºF.

Water temperatures in the NF Nooksack have been increasing in recent years, especially in summer months (see dashed line for 2015, Figure 1.3-3). Record high temperatures and drought in 2015 resulted in drastic differences from previous years in runoff and sediment loads from glaciers that feed the Nooksack River Sub-basin (Nooksack Indian Tribe, 2016). Although temperatures have increased, they still remain below the Washington State Water Quality Standard for spawning and incubation temperature criteria for the NF Nooksack (13°C or 55.4°F) from August 1 through July 15 to provide additional protection for eggs and embryos developing in the stream bed in late spring to early fall (WDOE, 2011).

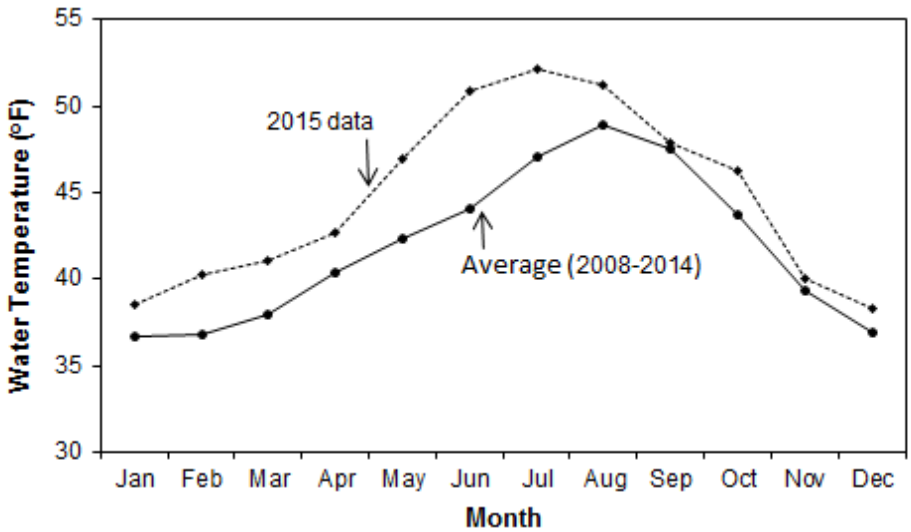

Figure 1.3-3
Comparison of Average Monthly Water Temperature in the NF Nooksack from 2008 through 2014 (Solid Line) to Average Monthly Temperatures Observed in 2015 (Dashed Line)

Turbidity has not been monitored in the NF Nooksack but has been reported by USGS for the MF Nooksack (USGS Station 12208000) upstream from the Project area and by WDOE for the Nooksack River mainstem downstream from the Project near North Cedarville (Station 01A120). Data collected concurrently on suspended solid concentrations (in mg/l, **X**) and turbidity (in Formazin Nephelometric Units, FNU, **Y**) indicate a highly significant direct linear relationship between the two parameters in the mainstem (**Y** = 0.487 **X** +6.78; $r^2 = 0.990$, $P<0.001$). Also, turbidity measured at both sites is directly related to discharge rate but high turbidity has also been reported in the MF Nooksack during July and August during relatively low flows (see Figure 1.3-4). Most likely the high turbidity during those summer months is related to melting glaciers at the headwaters on Mount Baker. Large flows of sediment from the MF Nooksack into the NF Nooksack have also been described by Hyatt (2007). Increasing temperatures, increasing winter flows, decreasing summer flows, and increasing sediment loading and transport are expected throughout the Nooksack Sub-basin, including the NF Nooksack, with continued climate change (Nooksack Indian Tribe, 2016).

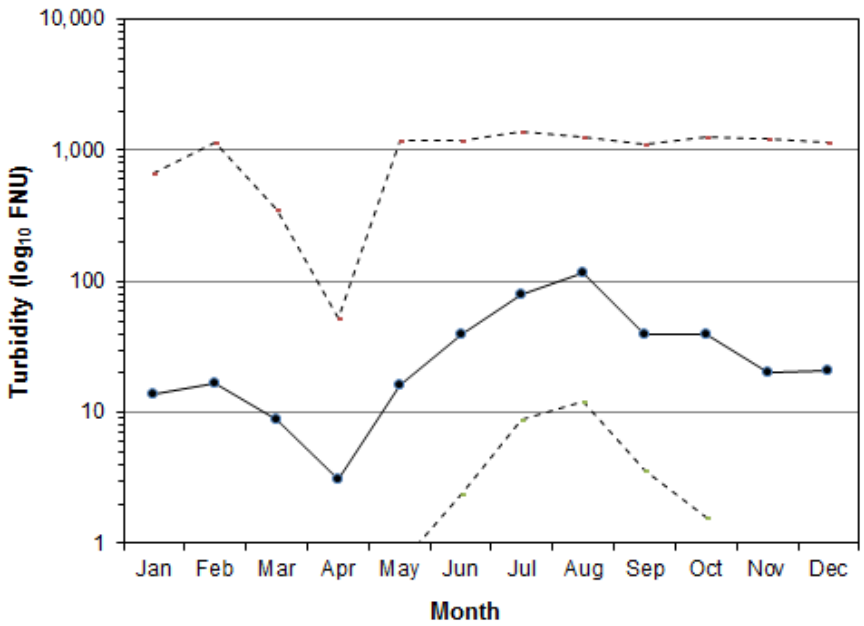

Figure 1.3-4
Average Monthly Turbidity (measured in FNU) in the MF Nooksack (USGS Station 12208000) from November 2013 through November 2016 (Solid Line) with monthly extremes (upper and lower dashed lines)

NMFS (2007a) has identified major salmonid habitat limiting factors in the NF Nooksack and its tributaries including: channel instability, lack of large woody debris (LWD), high coarse and fine sediment load, loss of off-channel habitats in historic channel migration areas, high temperatures, blocked access and inadequate stream flow. These limiting factors were attributed to lack of riparian shade and large woody debris (LWD) recruitment potential, elevated mass wasting rates, bank hardening, impassable culverts, and over allocation of water rights (NMFS, 2007a). There are many individuals, community groups and governments working throughout the Nooksack Sub-basin to address the limiting factors and improve and protect fish habitat including Whatcom Conservation District, Nooksack Salmon Enhancement Association (NSEA), Whatcom Land Trust, City of Bellingham, Whatcom County, Lummi Nation, Nooksack Indian Tribe and Washington Department of Fish and Wildlife (WDFW). Several salmon recovery projects have been implemented or are ongoing in the NF Nooksack to improve salmon habitat.

The lower NF Nooksack has recently been assessed by the Nooksack Tribe Natural Resources Department within 14 reaches, including a 1.6-mile reach (RM 36.7 to RM 38.3) that incorporates the Project (Hyatt, 2007). This reach of the NF Nooksack is the most actively shifting section of the river, creating a wide and heavily braided channel with extensive islands and back channel complexes. The channel has increased in width from 230 meters (755 feet) in 1938 to 440 meters (1,444 feet) in 2005. Wetted habitat in the area is evenly split among riffle, glide and slough habitat, providing productive habitats for salmon and other native resident fish. This area of the NF Nooksack also has the largest area of isolated pools that are connected at high flow but are disconnected from the NF Nooksack mainstem at low flows. The NF Nooksack floodplain is about 65 percent of historic channel migration zone forest cover, close to restoration goals of 70 percent (Nooksack Indian Tribe, 2016), although only 1.3 percent of the floodplain has enough mature timber that can contribute to LWD loading (Hyatt, 2007) and,

consequently, there is little recruitment of LWD. In the reach of the NF Nooksack near the Project, LWD loading is relatively high in comparison to other portions of the NF Nooksack as a result of channel avulsion that occurred in October 2003 that eroded approximately 17 acres of mostly mature coniferous timber. Within the 1.6-mile reach including the Project area, there were seven key LWD key pieces greater than $9m^3$ and 14 LWD jams that were large enough to affect the channel at high flows; on average, there were 0.11 key pieces per 100 meters of channel (Hyatt, 2007). Additionally, Northwest installed engineered log jams (ELJs) along approximately 500 feet of the north bank of the NF Nooksack in 2015. The ELJs were designed to prevent exposure of the existing 30-inch pipeline during erosion of the north bank.

1.4 Permits, Approvals and Regulatory Requirements

Table 1.4-1 provides a list of permits, approvals and consultations required for construction and operation of the NF Nooksack Line Lowering Project.

Table 1.4-1
Permits and Approvals Necessary for Construction and Operation

Agency	Permit/Approval
Federal Permits/Approvals	
Federal Energy Regulatory Commission	Certificate of Public Convenience and Necessity
	NEPA
U.S. Army Corps of Engineers	CWA Section 404
U.S. Fish and Wildlife Service	ESA Section 7 Consultation
	Fish and Wildlife Coordination Act
	Migratory Bird Treaty Act
National Marine Fisheries Service	ESA Section 7 Consultation
	Magnuson-Stevens Act
Environmental Protection Agency	CWA Section 401, Water Quality Certification on Tribal allotment lands
	Construction Stormwater NPDES Permit on Tribal allotment lands
State Permits	
Washington Department of Ecology	CWA Section 401, Water Quality Certification
	Construction Stormwater NPDES Permit
	Shoreline Management Act
	Coastal Zone Management Act
Washington Department of Fish and Wildlife	Hydraulic Project Approval
	Bald Eagle Management
Washington Department of Natural Resources	Forest Practices Act
Department of Archaeology and Historic Preservation	National Historic Preservation Act – Section 106 Consultation
County Permits	
Whatcom County	State Environmental Policy Act
	Shoreline Substantial Development & Conditional Use Permit
	Critical Areas Ordinance
	Land Disturbance (Grading Permit)
	Forest Practices

2.0 ESA Listed Species

2.1 Species List and Consultation History

Six species listed under the ESA are within the jurisdiction of the FWS and included in the agency's *Information for Planning and Conservation* (IPaC) system as potentially occurring within Whatcom County and the Project area. Listed species include the endangered gray wolf (*Canis lupus*) and the North American wolverine (*Gulo gulo luscus*) proposed for listing as threatened; and four threatened species including, marbled murrelet (*Brachyramphus marmoratus*), streaked horned lark (*Eremophila alpestris strigata),* yellow-billed cuckoo *(Coccyzus americanus*) and bull trout (*Salvelinus confluentus*). In addition, there is designated critical habitat for bull trout in the Project area (FWS, 2016a).

During December 8 and 9, 2016, Northwest conducted additional interagency meetings for the Project, where FWS personnel introduced concern for the Oregon spotted frog (*Rana pretiosa*), which is also listed as threatened under the ESA with designated critical habitat in Whatcom County. The species is discussed in this BA even though it was not included in FWS' IPaC list of species potentially occurring within the Project area.

Two other threatened species, both with designated critical habitat, also occur in the Project area but are under NMFS' jurisdiction. They are Chinook salmon (*Oncorhynchus tshawytscha)* and steelhead (*Oncorhynchus mykiss*). Critical habitat for Chinook salmon in the Puget Sound Evolutionarily Significant Unit (ESU) was designated in 2005 (NMFS, 2005) and critical habitat for steelhead in the Puget Sound Distinct Population Segment (DPS) was designated in 2016 (NMFS, 2016a).

Information on listed species' distributions, habitat requirements and potential occurrence in the Project area and vicinity was gathered from several sources including: 1) published scientific literature; 2) agencies' published and unpublished reports; 3) agencies' unpublished raw and/or compiled data; 4) agencies' geo-spatial databases which document species observations; and 5) on-site reconnaissance for species' habitats.

2.2 Species with Essential Fish Habitat

The Sustainable Fisheries Act of 1996 amended the Magnuson-Stevens Act and requires federal agencies, in part, to consult with NMFS about activities that may adversely affect EFH (NMFS, 1997). The Magnuson-Stevens Act established guidelines for Regional Fishery Management Councils to identify and describe EFH in fishery management plans. The Pacific Fishery Management Council (PFMC) amended the Pacific Coast Salmon Plan to identify and describe EFH and adverse effects and recommended conservation measures for Chinook salmon, coho salmon (*Oncorhynchus kisutch*) and Puget Sound pink salmon (*Oncorhynchus gorbuscha*), all of which are present in the Nooksack Hydrologic Unit (HUC 17110004) (PFMC, 1999). The Magnuson-Stevens Act describes EFH as waters and substrate necessary to fish for spawning, breeding, feeding or growth to maturity (NMFS, 1997). In freshwater, EFH for Chinook salmon, coho and pink salmon includes habitats for spawning and incubation, juvenile rearing, juvenile migration corridors and adult migration corridors and adult holding habitat for Chinook salmon (PFMC, 1999).

3.0 Project Description

3.1 Purpose and Need

Northwest proposed the project to address an ongoing channel migration and scour issue that continues to threaten the 30-inch pipeline. During the fall of 2014 and the spring of 2015, the river threatened to expose the 30-inch pipeline in the "sag/over bend area," which is where the pipeline transitions from designed river crossing depth (with greater than 15 feet of cover) to typical cross-country pipeline depth (with approximately 5 feet of cover). In response to the threat, Northwest implemented a temporary solution to prevent pipeline exposure by installing ELJs along approximately 500 feet of the north bank of the NF Nooksack. Conditions contained in the permits received from Whatcom County Planning and Development Services (Whatcom County PDS), Washington Department of Natural Resources (WDNR) and WDFW, authorizing the installation of ELJs in 2015, obligated Northwest to complete a long-term pipeline protection solution by the end of 2020. The Project is required to mitigate the risk of the pipeline being exposed while allowing the unimpeded movement of the river throughout the historic channel migration zone.

The Project would: 1) ensure system reliability and preserve service continuity by protecting Northwest's 30-inch pipeline at the NF Nooksack; 2) comply with Whatcom County PDS, WDNR and WDFW requirements to complete a long-term solution by the end of 2020; and (3) reduce long-term impediments to facilitate natural channel migration in the future.

3.2 Schedule

Northwest proposes to conduct timber felling activities as early as fall of 2018 and construct in 2019 during the driest months of the year (May to late September), followed by restoration. The Project is expected to take 14 to 17 weeks to complete. While the ELJs installed in 2015 are performing as designed, they are a temporary structure which could be undermined, flanked or overcome in severe flood events and will deteriorate over time. Therefore, to ensure system integrity and reliability, and to comply with Whatcom County PDS, WDNR and WDFW requirements to complete a long-term pipeline protection solution, Northwest is proposing to execute the Project as soon as possible. The schedule allows timber within the construction right-of-way and designated temporary extra work areas (TEWAs) to be felled outside the nesting season for migratory birds. Doing so would minimize potential effects to these species.

3.3 Project Design

The proposed activities for the Project include the following:

- Remove and dispose of approximately 1,700 feet of existing 30-inch pipeline between the following approximate tie-in points:
  - Engineering Station (ES) 21352+00 – approximately 450 feet north of Jim Creek
  - ES 21335+00 – where the top of the existing 30-inch pipeline is at or below an elevation of 215 feet above mean sea level (AMSL).
- Install, secure and hydrotest approximately 1,700 feet of new 30-inch pipeline between the above tie-in points such that the top of pipe (TOP) is at or below an elevation of 215

feet AMSL. Installation would include continuous concrete coating as determined to be necessary during the detailed design process.

- Remove and dispose of approximately 1,550 feet of existing AIP 26-inch pipeline that becomes exposed during the Project between approximate tie-in points:
  - ES 21352+50 – approximately 450 feet north of Jim Creek
  - ES 21337+00 – where the AIP 26-inch pipeline shifts to the east and is outside the excavation limits required for lowering the 30-inch pipeline to 215 feet AMSL.
- Install a weld cap on the remaining AIP 26-inch pipeline at ES 21352+50 and purge/fill the AIP 26-inch pipeline north toward mainline valve (MLV) 17-8 with nitrogen. Taking this action restores the AIP 26-inch pipeline north of the Project area to post-CRP conditions[1].
- Install a weld cap on the remaining AIP 26-inch pipeline at ES 21337+00 and another weld cap on the AIP 26-inch pipeline immediately upstream of MLV 17-7 (ES 21316+42). Once these are in place, fill the pipeline with grout. (*Taking this action dramatically increases the effective weight of the remaining 26-inch pipeline, which is already coated with three inches of reinforced concrete, across the historical river channel forcing it to remain buried or further settle down into the riverbed if it becomes exposed in the future.)*
- After construction is complete, disable the ELJs that were installed in 2015 by disconnecting metallic connections (removing all-thread rods, lag bolts, and chains) that are readily accessible from the surface by personnel working with hand tools.

3.4 Land Requirements

3.4.1 *Pipeline Facilities*

The proposed Project has been designed to safely and efficiently remove, dispose of and replace approximately 1,700 feet of existing 30-inch pipeline at or below a TOP elevation of 215 feet AMSL and remove and dispose of approximately 1,550 feet of existing, abandoned 26-inch pipeline that would also be exposed during the Project. To safely accomplish the Project, extensive excavation, spoil storage and dewatering activities would be required as well as equipment and material storage areas. Table 3.4-1 provides the total land requirements necessary to complete the Project.

Table 3.4-1
Land Requirements for Project Construction

Project Component	Length (feet) or Number of Sites	Land Affected During Construction (acres)	Land Affected (acres) During Operation - New Permanent Easement
Construction Right-of-Way [1]	1,700	6.11	0.00
Temporary Extra Work Areas [2]	14	18.17	0.00
Contractor and Pipe Storage Yard [2]	0	0.00	0.00
Existing Roads Needing Improvements in Limited Locations [3]	0	0.00	0.00
Total		**24.28**	**0.00**

[1] The construction right-of-way is 75 to 85 feet wide and is comprised of Northwest's existing permanent easement in this area. No new permanent easement is required to operate the new 30-inch pipeline (1401 line) that would be replaced at a depth of 215 feet AMSL.
[2] TEWAs would be used for equipment and materials staging and storage. No offsite yards have been identified.
[3] Does not include potential limbing/brush clearing or blading/grading within the existing road prism to use and subsequently restore the existing private road to preconstruction conditions.

Construction Right-of-Way. The construction right-of-way is 75 to 85 feet wide and coincides with Northwest's existing permanent easement to operate the existing 30-inch pipeline, the 36-inch pipeline and the AIP 26-inch pipeline. The construction right-of-way generally correlates to the trench excavation width for pipeline removal and replacement activities.

Temporary Extra Work Areas. In addition to the 75 to 85-foot wide construction right-of-way, TEWAs would also be required to complete the 30-inch and AIP 26-inch pipeline removal activities and to replace the new 30-inch pipeline. The TEWAs are generally required for the following purposes:

- Construction access/staging, tie-ins, staging and spoil storage;
- Dewatering activities to manage groundwater;
- Construction equipment and materials storage;
- Pipe staging and inspection;
- Parking; and
- Timber and slash storage.

A total of 18.17 acres of TEWAs would be required for pipeline removal and lowering activities. They are considered temporary disturbance, and upon completion of construction they would be reclaimed (see Erosion Control and Revegetation Plan [ECRP] in attachment A).

Our *Wetland and Waterbody Construction & Mitigation Procedures* (Procedures) contain a number of specifications regarding the location of TEWAs in proximity to waterbodies and wetlands and specify that TEWAs be set back 50 feet from these features, except where the adjacent upland consists of actively cultivated or rotated cropland or other disturbed land (see Sections V.B.2.a, V.B.2.b, VI.B.1.a, and VI.B.1.b). Because of the deep and extensive excavation and engineering requirements necessary to replace the new 30-inch pipeline at a TOP elevation of 215 feet AMSL, it is not feasible to incorporate these specifications into the Project's design; therefore, Northwest has requested certain modifications to our Procedures.

Permanent/Operational Easement. Since the new 30-inch pipeline would be installed along or between the same horizontal centerlines as the existing abandoned 26-inch and the 30-inch pipelines that are being removed, it would ultimately exist within the original permanent easement once the Project is completed. No new permanent easement is required.

3.4.2 *Aboveground Facilities*

No new aboveground facilities are proposed. Existing, fenced and graveled mainline valves (MLVs) 17-7 and 17-8 and their existing, graveled access roads would be used to purge/fill the AIP 26-inch pipeline with nitrogen or grout. At MLV 17-7, Northwest would utilize portions of the existing easement and adjacent, previously disturbed areas as TEWAs (TEWA-12 and TEWA-13). The TEWAs were utilized during construction of the 2006 Capacity Replacement Project (FERC Docket # CP05-32-001) and would be used to complete the grouting of the AIP 26-inch pipeline. However, TEWAs-12 and -13 would only be used to park vehicles, operate pumping equipment and stage materials. Existing vegetation and trees would not be cleared within these TEWAs. At MLV 17-8, Northwest would utilize portions of the existing easement and an adjacent, graveled lot identified as TEWA-14. TEWA-14 would be used for parking, operating purging equipment and staging materials to complete the nitrogen purge/fill activities for the abandoned 26-inch pipeline.

3.4.3 *Access Roads*

To construct the Project, Northwest would utilize the same access roads currently used to operate and maintain the existing pipelines to provide egress and ingress to and from the construction right-of-way. These roads include paved public roads: SR 542, SR 9 and Whatcom County's Truck and Rutsatz roads. One existing private road would also be used to provide light duty vehicle access to the Project area. The private graveled and dirt surfaced road would not require widening; however, minor improvements within the existing road footprint (blading, grading, graveling, limbing, and brushing) may be necessary to use or restore this road. Although Northwest uses this road to maintain and operate the existing pipelines, landowner permission would be sought to use the private road for construction of the Project.

3.4.4 *Pipe Storage and Contractor Yard*

Northwest would not use offsite contractor yards for the Project. Northwest would utilize TEWAs to stage and store construction equipment and materials, which may include: pipe, construction mats, fencing materials, fuel and lubricants, logs and timber slash and stormwater control materials (i.e., straw bales, erosion control fabric, silt fence materials, etc.). These TEWAs would also be used for contractor office trailers, concrete coating and employee parking facilities. Access would be from the SR 542 and Truck Road.

3.5 Construction Procedures

The Project would be designed, constructed, operated and maintained in accordance with U.S. Department of Transportation (DOT) regulations in 49 CFR Part 192, "*Transportation of Natural and Other Gas by Pipeline: Minimum Federal Safety Standards;*" FERC regulations in 18 CFR Part 380.15, "*Guidelines to be* Followed *by Natural Gas Pipeline Companies in the Planning, Clearing, and Maintenance of Rights-of-Way and the Construction of Aboveground Facilities;*" and other applicable federal, state and local regulations. In addition to the federal

requirements listed above, Northwest would construct and reclaim the Project in accordance with our *Upland Erosion Control, Revegetation, and Maintenance Plan* (Plan) and our Procedures.

In addition, Northwest has prepared a project-specific ECRP (see attachment A) and a Spill Plan for Oil and Hazardous Substances (Spill Plan – see attachment B). A Stormwater Pollution Prevention Plan (SWPPP) would be prepared to authorize stormwater discharge under WDOE's Construction Stormwater General Permit. The measures specified in these documents represent Best Management Practices (BMPs) that would avoid, minimize and restore Project-related effects to ESA-listed species and EFH.

Waterbody Crossings. The Project would affect eight waterbodies, all of which are considered fish-bearing. Seven of the affected waterbody segments would be crossed by temporary bridges to provide construction ingress/egress. One waterbody (Jim Creek) would be crossed by the trench in the area where the 30-inch pipeline would be replaced to an elevation of 215 feet AMSL. WDFW indicated (during an interagency Project meeting held in February 2017) that the standard in-water work window restrictions which are included in Hydraulic Project Approval permits would not be applied to this atypical Project. WDFW stated that the standard recommended in-water work period for the Project area is typically a three-week period between late-July and mid-August. However, the U.S. Army Corps of Engineers lists June 15 to July 31 for the in-water work period for the Project area. WDFW would require a fish salvage plan to minimize potential effects to fish from implementation of the Groundwater Management/Dewatering Program operation which would affect surface and groundwater hydrology within the Project area. Northwest has scheduled the 14- to 17-week Project to coincide with the driest months of the year and has developed a Fish Exclusion and Relocation Plan (see attachment C) to minimize potential effects to aquatic species.

Groundwater Management/Dewatering Program. To allow a safe and efficient trenching operation for pipeline removal and installation within the NF Nooksack floodplain where shallow groundwater levels are present, a significant dewatering program would be required. The dewatering program would include the use of well points along the entire construction right-of-way, drilled on either side of the new 30-inch trench alignment. A typical system may include wells installed on 30-foot centers, extending 15 feet below the bottom of the trench; containing a filter casing surrounded by filter media (pea rock). A pump would be installed in each casing with a discharge riser connected at the surface to a header pipe that connects all of the well points together. The common header pipe discharge would be directed into additional piping and/or hoses that would be routed to the west of the Project area to allow groundwater discharge directly into Jim Creek or the NF Nooksack. The piping and hoses would be appropriately sized for the volume of water to be discharged. It should be understood that site-specific conditions at the time of construction would dictate the dewatering system configuration including well location/depth/number, pump performance requirements, header sizing and discharge pipeline configuration.

The groundwater produced by this system would be cold, clear, filtered groundwater that can be discharged directly or indirectly into the Jim Creek system or to the NF Nooksack. Water would be filtered/aerated, if needed based on groundwater testing prior to Project implementation, to meet surrounding water conditions. Water would be discharged in a manner that prevents scour, erosion and sedimentation. As mentioned by WDFW during a February 2017 interagency meeting, the groundwater may contain high concentrations of iron and low

levels of dissolved oxygen compared to local surface waters. If the concentration of those constituents in, or the temperature of, the water are significantly different than ambient conditions in those streams, it may be necessary to treat (e.g., filtering, aeration, etc.) the water before it is discharged to surface waters. The EI, together with the construction contractor, would select an appropriate location for discharge. If the EI or construction contractor determines a discharge structure would be used, a typical discharge structure is described in Section 5.0 of the ECRP in attachment A. Permission to discharge the water would be applied for through WDOE and would be permitted through the construction stormwater permit.

This extensive dewatering program is expected temporarily to lower groundwater levels and effectively dry up the streams affected by the trenching and construction operations. To minimize potential effects to aquatic species from the dewatering activities, Northwest has developed a Fish Exclusion and Relocation Plan (see attachment C), which would salvage aquatic species in all affected waterbodies in the Project area. No hydrostatic test water or trench water would be discharged directly into waterbodies. The EI would visually monitor the release of groundwater, hydrostatic test water and trench water to ensure that no erosion or sedimentation occurs. The EI would ensure that turbid water is not discharged to surface waters.

After the new 30-inch pipeline is installed, the dewatering well casings would be extracted as and where they are no longer needed to facilitate construction and restoration activities.

Hydrostatic Testing. The pipeline would be hydrostatically tested in accordance with DOT regulations to ensure that the system is capable of operating at the maximum allowable operating pressure. Should a leak or break occur during testing, the pipeline would be repaired and retested until the test specifications are achieved. A total of approximately 59,000 gallons or 0.18 acre feet of water would be required to test the proposed 30-inch pipeline in one test section. Water for hydrostatic testing would be obtained from the groundwater management system well points that are installed for the Project.

Cathodic Protection. The pipeline would be protected from corrosion with a low voltage electrical system, cathodic protection (CP) system, using the existing system established for the 30-inch pipeline. All facilities would be designed, constructed, tested, operated and maintained to meet the requirements of Title 49 Code of Federal Regulations (CFR), Part 192, Transportation of Natural and Other Gas by Pipeline: Minimum Safety Standards; 18 CFR, 380.15, Site and Maintenance Requirements; and other applicable federal regulations.

4.0 Action Area

The Action Area includes all areas that would be affected directly or indirectly by the Project and not just the immediate area involved.

4.1 Aquatic Action Area

The Aquatic Action Area includes the hyporheic zone coincidental to the Jim Creek system. The extent of the hyporheic zone is unknown and it is likely to vary over time, depending on discharge and other properties of surface and groundwater flow (Tonina and Buffington, 2009). In addition, the Aquatic Action Area includes the surface waters within and downstream (for

some unknown distance) of both the NF Nooksack and Jim Creek where the pumped groundwater would be discharged.

As described above in Section 3.3, the ELJs that were installed in the NF Nooksack in 2015 would be disabled by disconnecting metal connections (removing all-thread rods, lag bolts, and chains) that are readily accessible from the surface by personnel working with hand tools. Some of the wood components could, over time, dislodge and be transported downstream in a way that mimics ongoing processes affecting other large wood movement and distribution within the river and, while associated with the Proposed Action, would not adversely affect aquatic habitats in the NF Nooksack. The undeterminable distance downstream that dislodged ELJ components could travel would contribute to the Aquatic Action Area.

As described above, wells would be drilled on each side of the new 30-inch trench alignment. A typical system may include wells separated by 30 feet on each side and drilled to a depth 15 feet below the bottom of the trench. Submersible pumps for wells 6-inches in diameter or larger that are used in construction can pump from 30 to 400 gallons per minute (gpm) (for example, see Goulds Water Technology, online http://goulds.com/submersible-well-pumps/6-inch-well-pumps/). To illustrate the potential scale of pumping groundwater, consider that a possible total of 114 wells with pumps each removing 400 gpm could discharge 45,600 gpm, or 0.14 acre-foot of water per minute. That many pumps operating continuously for 24 hours would discharge an estimated 202 acre-feet of water (enough water to cover 202 acres to a depth of 1 foot or 20 acres to a depth of 10 feet). Since the open trench and associated construction right-of-way is expected to cover 6.11 acres (see Table 3.4-1), the area of water draw-down affected over a 24-hour could extend to 180 feet beyond each side of the pipeline centerline (more or less depending on groundwater depth if >10 feet, hyporheic connectivity, and recharge rates). Additional volumes of water withdrawn during the entire construction period would likely affect groundwater availability farther from the construction right-of-way, but such estimates are impractical.

The action of pumping groundwater is expected to draw-down surface water in the Jim Creek system within some unknown distance from the trench. The draw-down of surface water would likely strand listed aquatic organisms including Oregon spotted frogs, Chinook salmon, steelhead and bull trout, if present. The removal of groundwater is also expected to affect hyporheic exchange with the NF Nooksack for the Project duration. As described above, Northwest proposes to discharge groundwater directly into Jim Creek or the NF Nooksack. Those actions would affect the natural hydrograph of both waterbodies; the effects are expected to extend for some undetermined distance downstream in the NF Nooksack from the point of discharge and from the confluence with Jim Creek and are components of the Aquatic Action Area.

4.2 Terrestrial Action Area

Noise from chain saws, dump trucks, excavators, dozers and loaders would exceed ambient noise at the Project site and along the access route. Noise levels 50 feet away from typical construction equipment used to construct a pipeline or road, including upgrading an existing road, are provided in Table 4.2-1, based on measurements made by Washington State Department of Transportation (WSDOT, 2011a). Assuming that noise due to construction equipment would be classified as point sources, the standard sound reduction is 7.5 dB per doubling of distance (with soft surface conditions such as vegetative cover) from the source

(WSDOT, 2011). Also, tree cover can reduce noise by 5 dB for every 100 feet of intervening vegetation, up to a maximum reduction of 10 dB (WSDOT, 2011a). The maximum distance of the Action Area from Project construction due to noise would be 1,528 feet (0.29 mile) from construction activities, based on chain saw use in areas with minimal tree cover (see Table 4.2-1).

The Project would be mostly within a forested rural setting with some agricultural landscape supporting livestock. Although not measured, average ambient noise levels in the Project area are assumed to be 40 dB (non-wilderness, see EPA, 1974), but background noise levels in the Project area (composite of sound from all sources, including anthropogenic sources) are likely higher with the presence of SR 542, SR 9 and Whatcom County's Truck Road in close proximity to the Project. WSDOT (2015) recorded average daily traffic levels from 2012 through 2015 on SR 542 near the intersection with SR9, which ranged from 5,700 vehicles per day in 2012 to 6,300 vehicles per day in 2015, or approximately 570 to 630 vehicles per hour traveling on SR 542. Assuming that traffic is traveling at 55 mph, it is calculated that traffic noise would attenuate to 68.5 dBA at 50 feet and could be audible above ambient noise levels approximately 1,700 feet away from SR 542, near the southern end of the Project area. Noise from the NF Nooksack would also contribute to background noise levels in the southern portion of the Project.

Table 4.2-1
Average Maximum Noise (Lmax) at 50 feet from Construction Equipment and Distances to Attenuate to Assumed Ambient Levels (WSDOT, 2011a)

Equipment	Noise dBA (Lmax measured at 50 feet)	Distance (feet) to Attenuate to Assumed Ambient Noise Level of 40 dBA	
		Soft Site Reduction At 7.5 dB per double of distance (No Intervening Trees)	Soft Site Reduction At 7.5 dB per double of distance (With 200 feet of Trees)
Chain Saw	84	1,528	606
Warning Horn	83	1,393	553
Dozer	82	1,270	504
Excavator	81	1,158	459
Front End Loader	79	962	382
Backhoe	78	877	348
Dump Truck	76	729	289
Pickup Truck	75	665	264

The Terrestrial Action Area for effects to marbled murrelets is assumed to be related to noise above ambient levels, which is estimated as a maximum distance of 1,528 feet (0.29 mile) surrounding the Project although noise produced by traffic on SR 542 would exceed ambient levels of 47 dBA for more than half of the Project's length.

5.0 Species' Accounts, Critical Habitat, Project Effects and Determinations of Effect

There are four ESA-listed species and one species proposed for listing that were included in the FWS IPaC system output. Also, as noted above, Oregon spotted frog is included here although the species was not listed by the FWS IPaC system. Four species would not be affected

by the Project: the gray wolf, North American wolverine, streaked horned lark and yellow-billed cuckoo. Brief synopses of the rationales to exclude these species from consideration in this BA are provided below. Two other species, the marbled murrelet and Oregon spotted frog, may be affected, but neither species is expected to be adversely affected by the Project and both are included this BA.

5.1 Determinations of No Effect

5.1.1 *Gray Wolf*

The gray wolf was listed as endangered in 1974 (FWS, 1974). FWS delisted the gray wolf within the Northern Rocky Mountain (NRM) DPS on May 5, 2011, which included wolves in eastern Washington (FWS, 2011a). Gray wolves in western Washington, including wolves in Whatcom County, are not considered to be in the NRM DPS and are still endangered under the ESA.

Gray wolves are habitat generalists that predate usually on large ungulates, including elk (*Cervus canadensis* ssp.), mule deer (*Odocoileus hemionus*), white-tailed deer (*Odocoileus virginianus*) and moose (*Alces alces*), where available, and occasionally other, smaller prey such as ground squirrels (*Spermophilus* spp.), snowshoe hare (*Lepus americanus*) and grouse (family Phasianidae.) (Larsen and Ripple, 2006). Wolves inhabit areas where human-caused mortality rates are not excessive (FWS, 2013a). Wolves appear most vulnerable to human disturbance in and around denning and rendezvous sites (Larsen and Ripple, 2006). Based on these characteristics, key components of wolf habitat that appear consistent across the diversity of landscapes inhabited by wolves include the following: 1) a sufficient year-round prey based of ungulates and alternate prey; 2) suitable and somewhat secluded denning and rendezvous sites; and 3) sufficient space with minimal exposure to humans (Larsen and Ripple, 2006).

In 2015, the minimum estimated wolf population was at least 90 known wolves in 18 packs, most of them distributed in the Eastern Washington wolf recovery area (Becker et al., 2016). However, three extant packs have become established in the Northern Cascades recovery area which includes Whatcom County but none is within Whatcom County. The closest pack to the Project area is the Lookout Pack located southwest of Twisp in Okanagan County, approximately 100 miles southeast (Becker et al., 2016). There was a minimum of three wolves in the Lookout Pack in 2015 (Becker et al., 2016).

WDFW personnel reported a single wolf in western Whatcom County about 4.4 miles west of the Project area in 1995. In September 1992, WDFW reported a single wolf in Skagit County near SH 9 about 20 miles south of the Project area and reported another (perhaps the same wolf) in October 1992, also near SH 9 about 14 miles south of the Project area (WDFW, 2010a). Also, WDFW (2009, Appendix G) provided four reports of wolves in Whatcom County: one animal seen in 2007, track photographed in 2008 and 2009, and an animal seen in 2009. The observations may have been of dispersing single animals. In addition, there are several sightings of single wolves reported by the public during 2015 in western Whatcom County. The reports are provided by WDFW with the caveat that they are “unconfirmed and do not constitute proof of wolf activity in the areas displayed” (WDFW, 2016a).

The Project area and vicinity do not appear to support large numbers of big game animals (e.g., deer, elk) that would serve as a prey base for gray wolves. The Project area is within Game

Management Unit 418 (Nooksack GMU) but does not coincide with any designated deer or elk hunt areas. The black-tailed deer (*O. h. columbianus*) population within GMU 418 has not been monitored, but suitable habitat for black-tailed deer has been reduced through human encroachment and reduction of timber harvest with declining early seral forests (WDFW, 2015). Surveys for elk have been conducted in GMU 418 which is part of the North Cascades elk herd; the population was estimated at 1,060 elk in 2014. Elk habitat has been lost from residential development and forest land conversion (WDFW, 2015).

Presence of a wolf in the Action Area during Project implementation is highly unlikely. That conclusion is based on available information about historical wolf occurrence in Whatcom County, distance to habitats known to be occupied by wolf packs and limited potential prey species in the region surrounding the Project.

The Project would have **No Effect** on gray wolves.

5.1.2 Streaked Horned Lark

The streaked horned lark was listed as threatened with critical habitat under the ESA in a final rule published October 3, 2013 (FWS, 2013b). Critical habitat has been designated at several sites in Oregon's Willamette Valley and along the Washington southwest coast and lower Columbia River.

Loss of nesting habitat in native prairies has led to streaked horned larks nesting on artificially maintained short grass areas adjacent to several airports in Washington and Oregon (FWS, 2013). Maintenance mowing during the nesting period affects the species. Industrial development in open areas has altered breeding and wintering habitat. Native grasslands have become isolated and intermingled with residential, municipal and farm lands. In coastal areas, exotic beach grasses have invaded dune habitats that were used for nesting by horned larks and have reduced nesting habitats in some areas. In addition, predation of streaked horned lark nests has been a primary source of nest failure (FWS, 2010a).

The streaked horned lark migrates between Oregon and Washington with breeding populations found in the Puget Sound lowlands, Columbia River/coastal Washington and the Willamette Valley in Oregon from late March to early August. In Washington, nesting habitats include open grasslands, beaches and dredge spoils islands with sparse vegetation and agricultural fields, with individuals showing preference to bare ground compared to vegetation several inches tall (Stinson, 2005).

Breeding Bird Survey (BBS) route number 89027 (Kendall) passes within 2.5 miles of the Project area; the surveyed area includes floodplains and riparian habitats associated with the NF Nooksack and MF Nooksack. Except for one year, the route has been continuously surveyed from 1981 through 2015. No horned larks of any subspecies have been reported. Further, there are no native prairies or open areas with pastures, grasslands or bare ground in the Project area that might provide suitable habitats for streaked horned larks. No currently occupied breeding locations have been reported in Whatcom County (Stinson, 2016). Presence of a streaked horned lark in the Action Area during Project implementation is highly unlikely. That conclusion is based on available information about the historical species' occurrence in Whatcom County.

The Project would have **No Effect** on streaked horned larks or on designated critical habitat.

5.1.3 *Yellow-billed Cuckoo*

FWS (2014a) listed the western DPS of yellow-billed cuckoo as threatened under the ESA in 2014. The western DPS closely aligns with the defined range of the western yellow-billed cuckoo subspecies as partially described in the 12-month finding (2001a) which determined that listing the species as threatened was warranted but precluded by higher priorities (FWS, 2001a). Critical habitat for yellow-billed cuckoos was proposed in 2014 (FWS, 2014b) to include sites in all western states except in Oregon and Washington.

The western DPS includes suitable habitat within low- to moderate-elevation areas west of the crest of the Rocky Mountains in Canada, Mexico and the western United States. Yellow-billed cuckoos are considered a riparian obligate species and are usually found in large tracts of cottonwood/willow habitats with dense sub-canopies, but may also be found in urban areas with tall trees (FWS, 2007). Conversions of native riparian woodland habitat decrease amounts of vegetation that supply the western yellow-billed cuckoos with essential food and adequate thermal cover (FWS, 2014b). Cuckoos may be affected by applications of chlorinated hydrocarbon pesticides that are toxic and reduce insect prey species (especially caterpillars) which can reduce nesting success (FWS, 2014b).

BBS route number 89027 (Kendall) passes within 2.5 miles of the Project area; the surveyed area includes floodplains and riparian habitats associated with the NF Nooksack and MF Nooksack. Except for one year, the route has been surveyed each year from 1981 through 2015. No yellow-billed cuckoos have been reported.

Historic accounts of yellow-billed cuckoos include reports from Washington, with occurrences in the Puget Sound lowlands and lower Columbia River although last confirmed breeding records in the State are from the 1930s (FWS, 2011b). More recent surveys were conducted in Okanogan and Yakima counties to check locations where the species had been sighted but no cuckoos were detected. FWS (2011b) suggests that yellow-billed cuckoos may be extirpated from Washington. Presence of a yellow-billed cuckoo in the Action Area during Project implementation is highly unlikely. That conclusion is based on available information about the historical species' occurrence in Whatcom County.

The Project would have **No Effect** on yellow-billed cuckoos or on proposed critical habitat.

5.1.4 *North American Wolverine*

Wolverines were proposed for listing as threatened under ESA (FWS, 2013c) but the proposed action was withdrawn in 2014 because the threats cited were not sufficient to cause listing under the ESA (FWS, 2014c). However on April 4, 2016, the U.S. District Court for the District of Montana vacated the FWS' August 13, 2014 withdrawal of its proposed rule to list the distinct population segment of the North American wolverine as threatened under the ESA. The wolverine is currently considered a species proposed for threatened ESA status (FWS, 2016b).

FWS (2013c) summarized threats to wolverines within the contiguous United States. Climate change may have already reduced and may continue to limit the distribution of wolverine suitable habitat. Despite the lack of detectable population-level impacts, it is still likely that habitat is already reduced from historic levels due to climate warming because deep snow that persists into May is essential for wolverine reproduction (FWS, 2013c). Demographic

stochasticity and loss of genetic diversity due to small effective population sizes, with concomitant habitat loss resulting from climate change may contribute to population declines (FWS, 2013c).

Wolverines occur within a wide variety of alpine, boreal and arctic habitats, including boreal forests, tundra and western mountains in the United States and Canada (FWS, 2011c). Wolverines primarily scavenge carrion, but also consume small animals, birds, fruits, berries and insects. Wolverines travel long distances over rough terrain and deep snow, and adult males generally cover greater distances than females. Persistent, stable snow greater than 5 feet deep appears to be a requirement for natal denning as it provides security for offspring and buffers cold winter temperatures. At the southern limits of the species' range, wolverines' distribution is limited to higher elevations where temperatures are colder and sufficient snow cover persists (FWS, 2011c).

WDFW (2012) notes that wolverines historically occurred in alpine and subalpine habitats of the Cascades and animals had been photographically detected near Mt. Adams in 2009 and 2010. Since then, several wolverines have been trapped and fitted with radio collars; three wolverines were found in the vicinity of Stevens Pass in 2012 and another animal detected during August 2012 west of the Cascades Crest near Glacier Peak Wilderness (WDFW, 2012). Recently, Conservation Northwest (2016) reported wolverines present in the upper Cle Elum River drainage northeast of Snoqualmie Pass in 2014 and in the Teanaway Valley in 2015. All locations are far from the Project area, outside of Whatcom County. However, a female wolverine was found as roadkill on SH 9, 3 miles north of Acme in Whatcom County during 1997 (WDFW, 2010a). The site is about 3.7 miles south of the Project area.

Presence of a wolverine in the Action Area during Project implementation is highly unlikely. That conclusion is based on available information about the current distribution of wolverines in Washington, as well as lack of suitable habitats in the region surrounding the Project to support wolverines except possibly during dispersal.

The Project would have **No Effect** on wolverines.

5.2 Determinations of Effect

5.2.1 *Marbled Murrelet*

5.2.1.1 Species Account and Critical Habitat

Status. Marbled murrelets in Washington, Oregon and California were listed as threatened under the ESA on October 1, 1992 (FWS, 1992).

Threats. There are two components of marbled murrelet habitat that are biologically important: 1) terrestrial nesting habitat and associated stands, and 2) marine foraging habitat, including prey spawning and concentration areas. Threats to murrelets are apparent in both the terrestrial nesting environment and the marine foraging environment. Extensive harvest of late-successional and old-growth forest was the primary reason for listing the marbled murrelet as threatened in 1992 (FWS 1992). Predation is expected to be the principal factor limiting murrelets reproductive success and nest site selection (Ralph et al., 1995; Nelson and Hamer, 1995). Known predators of marbled murrelet adults, chicks, and eggs in the terrestrial

environment include corvids and Steller's jays, as well as other avian species such as peregrine falcons, sharp-shinned hawks and northern goshawks, some of which have been observed in the Project area (Nelson and Hamer, 1995; The Watershed Company, 2016a). Common ravens account for the majority of egg depredation (Nelson and Hamer, 1995). In marine foraging habitat, coastal oil spills and gill-net fishing off the Washington coast were identified as primary threats to marbled murrelets (FWS, 1992).

Species Recovery. FWS published a recovery plan for the marbled murrelet in 1997 for Washington, Oregon and California (FWS, 1997a). The objective of the recovery plan is to stabilize population size at or near current levels by maintaining and/or increasing productivity of the population and removing and/or minimizing threats to survivorship. The recovery plan divided the range of the murrelet into six conservation zones. Conservation Zone 1 coincides with the Project area, which extends south from the U.S./Canadian border along the edge of Puget Sound to Koitlah Point and 50 miles inland. Nesting on the eastern shore of Puget Sound, especially within the Puget Trough, is limited because of intense urban development. Remaining suitable nesting habitat is more than 20 miles inland from the shore. Therefore, conservation of nesting habitat that is closest to Puget Sound is an important recovery action in Zone 1 (FWS, 1997a).

Life History, Habitat Requirements and Distribution. Murrelets spend most of their lives in the marine environment where they forage in shallow off-shore and inland saltwater areas on a variety of small fish and invertebrates (Marshall, 1988a, 1988b and 1989; Becker, 2001). The marbled murrelet nests primarily in coastal, old growth coniferous forests, characterized by large trees, multi-storied stands and moderate-to-high canopy coverage from Alaska to Monterey Bay, California (FWS, 2006a); murrelets rarely nest in cliffs or deciduous trees (references in FWS, 2012). Trees within suitable habitat must have large branches or deformities, such as high, moss-covered branches or branches with growths of dwarf mistletoe (*Arceuthobium* sp.), which serve as nest platforms (Binford et al., 1975; Marshall, 1988a and 1988b; Naslund, 1993; FWS, 1997a). In Washington, FWS considers a coniferous tree to provide potential murrelet nesting opportunities if at least one nesting platform that is at least 4 inches wide and 33 feet above the ground, with horizontal and vertical cover to protect the nest site occurs within 55 miles of marine foraging habitats (FWS, 2012). Generally, forests that provide suitable nesting habitat and nest trees require 200 to 250 years to develop (FWS, 2006a).

The distance inland that marbled murrelets breed is variable and influenced by a number of factors such as habitat availability, climate suitability, foraging range and predation rates (McShane et al., 2004). In Washington, marbled murrelet nest sites and occupied stands are located as far as 30 and 40 miles from salt water depending on habitat (Mack et al., 2003), although most often sites are found within 12 miles of the ocean (FWS, 1996). Federal lands account for the majority of suitable murrelet habitat in California, Oregon and Washington (McShane et al., 2004). A substantial proportion of nests are known to fail (Nelson and Hamer, 1995); breeding success has been documented as high as 0.46 chicks per breeding pair in southern British Columbia but lower in northern California with 0.135 to 0.324 chicks per pair (McShane et al., 2004), too low to sustain a population.

Population Status. The exact population size of murrelets in North America is not known; however, current population estimates have relied on counts at sea rather than on estimates from terrestrial habitats; an estimated 19,700 birds (with 95 percent confidence interval of 15,300 to

23,900 birds) occurred within the Northwest Forest Plan area during 2013 (Falxa et al., 2016). Based on at-sea counts, the population estimate for Conservation Zone 1 in 2013 was 4,395 birds (with 95 percent confidence interval of 2,275 to 6,740 birds; see Pearson et al. 2014), which has declined since 2001 by 3.88 percent (see Figure 5.2-1, below and Figure 1.1 in Falxa et al, 2016).

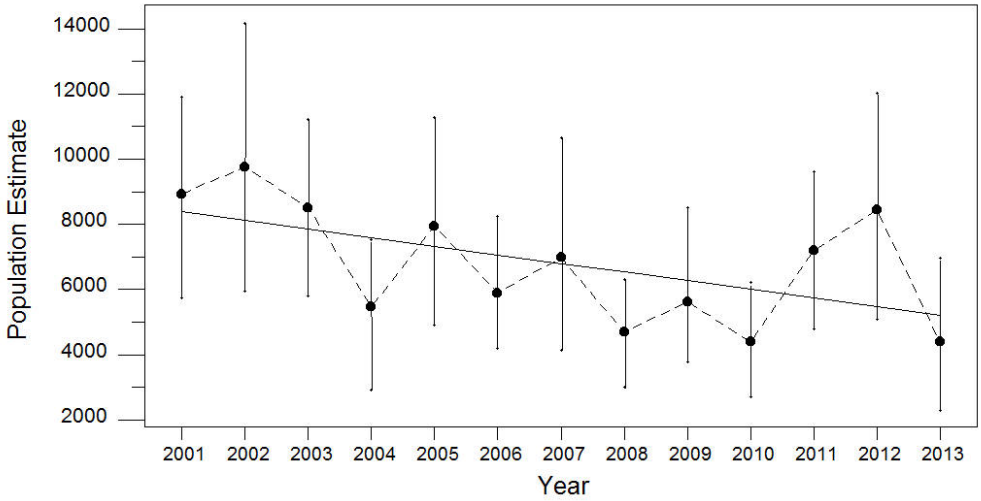

Figure 5.2-1
Population Estimate (± 95% Confidence Intervals) of Marbled Murrelets in Conservation Zone 1 (Puget Sound) with a Significant Declining Trend (P<0.05) from 2001 through 2013 (source: Falxa et al., 2016)

Critical Habitat. Critical habitat for the marbled murrelet was designated for Washington, Oregon and California in 1996 (FWS, 1996). The 1996 Final Rule designating critical habitat for the marbled murrelet in California and Oregon was revised in a final rule published in 2011 (FWS, 2011d). However, critical habitat in Washington is currently the same as the critical habitat designated in the 1996 final rule. The closest designated critical habitat for marbled murrelets to the Project is Critical Habitat Unit WA-07-a in eastern Whatcom County, approximately 9.75 miles east in Mount Baker National Forest.

5.2.1.2 Environmental Baseline

Species Presence. In Washington, marbled murrelets usually nest in older forests dominated by western hemlock, Sitka spruce, Douglas-fir and western red cedar from April through mid-September in which murrelets make daily flights to/from inland nest sites and marine foraging areas (WDFW, 2016b; Nelson and Hamer, 1995). Murrelets exhibit strong site fidelity to nesting areas, and some nest in the same trees in successive years (references within WDFW, 2016b). Nesting murrelets were located in marbled murrelet detection areas in the vicinity of Van Zandt Dike (Whatcom County) approximately 1.6 miles east of the Project and 1.8 miles southeast of the Project in 2004 and 2005, respectively (WDFW, 2010a). The Project is located outside of marbled murrelet detection areas; however, murrelets likely pass by the Project area as they travel along the Nooksack River system to contiguous, occupied coniferous forest further east of the Project.

Habitat. On-site surveys conducted during September 2016 reported that some trees in the Project area are large (20 to 29 inches diameter-at-breast-height, dbh) and larger (>30 inches dbh); composition includes black cottonwood, bigleaf maple, western red cedar, Sitka spruce and

grand fir. The largest conifer trees are primarily located from the point where Jim Creek crosses the existing pipeline easement south to the north bank of the NF Nooksack and in the northwestern corner of the study area (The Watershed Company, 2016b), and are surrounded by a variety of deciduous trees with a small component of younger coniferous forest (Hamer Environmental, 2017; see Figure 3 in attachment D).

Hamer Environmental (2017) further evaluated the large coniferous trees south of SR 542 and Truck Road and within approximately 500 to 1,000 feet of Northwest's existing permanent easement (study area) for potential marbled murrelet nesting platforms. A total of 53 coniferous trees were found containing 259 potential marbled murrelet nesting platforms, generally clustered in two areas on private lands (see Figure 2 in attachment D): 27 trees (113 platforms) within an approximate 8-acre area north of the Project's Jim Creek crossing extending from the edge of the cleared existing permanent easement to 1,000 feet west and 400 feet east, and 18 trees (100 platforms) within an approximate 3-acre area along the northern bank of the NF Nooksack extending from the edge of the existing permanent easement to 300 feet either side. The other eight trees (46 platforms) were located either on the edge of pasture near Truck Road on the north end of the Project (two trees), along the private access road to the construction area (one tree), or located on the south side of the NF Nooksack (five trees); no potential nest trees were located on lands managed by the State of Washington. Potential platforms included a mixture of large branches, moss covered branches and platforms created by a split-top tree (Hamer Environmental, 2017; see attachment D).

According to the Washington State Forest Practice Rules, suitable marbled murrelet habitat must be at least 7 contiguous acres in size (potential nest trees not separated by more than 100 meters or 328 feet), which would eliminate the area of potential nesting trees found along the NF Nooksack that is only 3 acres. The suitable habitat area located north of Jim Creek and spanning Northwest's existing permanent easement includes 7.75 acres of habitat, of which approximately 7 acres (6.75 acres) are forested. This area contains an average of 14 potential nesting platforms per acre, which also meets the Forest Practice Rules definition of suitable marbled murrelet habitat: a minimum of seven platforms per acre outside of a detection area (see Hamer Environmental, 2017, attachment D).

Hamer Environmental (2017) concluded that the overall habitat quality for marbled murrelet nesting in the Project area appears to be marginal throughout the survey area and surrounding habitat. This assessment correlates to marbled murrelet habitat mapped by Raphael et al. (2016) for the Northwest Forest Plan monitoring efforts, which classifies forested habitat in the Project area as low to marginally suitable nesting habitat. Additionally, with the exception of three potential nesting trees in the 7.75-acre area north of Jim Creek, all potential nesting trees are located within 100 meters of existing edge (Northwest's 75- to 85-foot wide permanent easement, Truck Road and SR 542, NF Nooksack, and recent clearcut habitat west of the Project). Exposed edges alter microclimate effects (light, moisture, wind and temperature gradients) in adjacent stands and can result in the loss of moss for nesting substrate, reduced canopy cover, altered forest composition and increased risk of nest predation (Chen et al. 1995; Harper et al., 2005). Research indicates that marbled murrelets tend to nest in stands that are generally located away from high-contrast edge created from timber stand harvests and adjacent immature forests (Ripple et al., 2013; Meyer et al., 2002). Therefore, the use of marginal murrelet habitat near existing edge in the Project area is unlikely.

Although marbled murrelet nesting in the Project area is unlikely, the potential presence of marbled murrelets in isolated old-growth trees in the Project vicinity cannot be ruled out given the presence of several coniferous trees with old-growth characteristics and potential nesting platform structures, though isolated from contiguous coniferous forests, and the proximity of documented occupied habitat south and southeast of the Project.

Critical Habitat. There is no critical habitat within the Action Area.

5.2.1.3 Environmental Effects

Direct and Indirect Effects

Construction of the Project could affect marbled murrelets if they are present in the Action Area through one or more of the following pathways:

- Removal of nest trees or potential nest trees during the breeding season (April 1 through September 15).
- Human and noise disturbance due to right-of-way clearing and construction during the breeding season.
- Fragmentation of existing habitat that could increase predator presence and alter microclimate effects in adjacent habitat.

Habitat Removal. Construction of the Project would remove approximately 10.12 acres of forested habitat, of which 1.76 acres would be removed on the edge of Northwest's existing permanent easement within the marginal 7.75 acres of potentially suitable marbled murrelet habitat area north of Jim Creek, including two trees with potential nesting structures (five platforms) on the eastern edge of the existing permanent easement. Project construction would also remove approximately 1.19 acres of forested habitat on either side of the existing permanent easement within the 3-acre suitable murrelet habitat area near the NF Nooksack, including seven other potential nest trees (34 platforms). Removal of marbled murrelet nesting habitat during the breeding season (April 1 through September 15) could result in the potential death of nestlings, if an occupied nest tree is removed. Removing habitat outside of the entire breeding season (before April 1 and after September 15) would eliminate any potential direct impact to individual murrelets or nestlings. Forested habitat removal in the Project area would occur outside of the entire breeding (from September 16 through March 31); therefore, no potential nesting habitat would be removed during the breeding season and no direct effects from habitat removal to marbled murrelets are expected.

Coniferous forested habitat would be reduced within the marginal 7.75-acre area of potential murrelet nesting habitat north of Jim Creek from approximately 6.75 acres to approximately 4.98 acres, and within the 3-acre area near NF Nooksack from 2.4 acres to approximately 1.21 acres. However, removal of forested habitat would not result in potential nest trees being farther than 100 meters apart within both the 7.75-acre and 3-acre potential nesting habitat areas identified during Project surveys; therefore, the marginal nesting habitat would still be considered contiguous by the Washington State Forest Practice Rules definition. Additionally, the number of remaining platforms within the 7.75-acre habitat area (108 platforms, or 13.9 platforms per acre) would continue to be above the Forest Practice Rules requirement of a minimum of seven

platforms per acre outside of detection areas. The 7.75-acre area of marginal murrelet nesting habitat north of Jim Creek would remain, by Forest Practice Rules definition, potential murrelet nesting habitat.

Forested habitat removal can fragment murrelet habitat and create edges that could affect the remaining potential murrelet nesting habitat in two ways: through increased risk of nest predation and habitat degradation resulting from windthrow and microclimate changes. The Project would remove forested habitat adjacent to Northwest's existing permanent easement and would not result in additional fragmentation of potential murrelet nesting habitat; predator presence in the Project area would not be expected to change. However, forested habitat removal would result in 12 potential nest trees being closer to a hard contrast edge, including six trees in the 7.75-acre potential nesting habitat, which could alter microclimate and affect potential moss-covered nesting platforms in the trees. Research has indicated that effects to habitat within mixed forests with deciduous species have less pronounced edge effects compared to edge effects to interior forests in contiguous coniferous forests (Heithecker and Halpern, 2007; Harper and MacDonald, 2002); therefore, edge effects from Project construction to adjacent deciduous-dominated forest habitat would be minimal. After construction, Northwest would reestablish forested habitat outside of the existing permanent easement in areas that were previously forested, which would contribute to the reestablishment of native vegetation and soften possible edge effects created from construction of the Project.

Noise. If nesting marbled murrelets are present within the Project area, noise associated with clearing, grading, dewatering, construction and operation of the Project, if conducted during the murrelet breeding period (April 1 through September 15), could disturb nesting murrelets causing them to flush from the nest negatively affecting productivity (FWS, 2003). The sensitivity of an individual marbled murrelet to noise and/or visual disturbance is likely related to levels of disturbance to which the bird is accustomed, including the level and proximity of the disturbance (Hamer and Nelson, 1998), as well as the timing of disturbance (time of day, time of year and time within breeding season). Based on analysis of published literature and anecdotal accounts of harassment of murrelets, the FWS (2003) established distances where sound levels for various activities may result in injury or harassment of murrelets by significantly disrupting the normal behavior pattern of individuals or breeding pairs, generally where noise levels would be 82 dB or above (FWS, 2006b). FWS (2006b) determined that significant disturbances to murrelets can occur within a distance of 100 yards (300 feet) to 120 yards (360 feet) of suitable nesting habitat throughout the murrelet breeding season. Therefore, disruption to nesting murrelets could occur from the Project if chainsaws or heavy construction equipment were used within 100 yards (300 feet) to 120 yards (360 feet) of nesting murrelets during the breeding season. Activities that occur beyond the disruption distance may "disturb" nesting murrelets but not result in harm.

The FWS typically considers the disturbance threshold for general noise generating activities within a 0.25-mile radius of the activity during the murrelet breeding period (April 1 through September 15). Based on noise levels expected 50 feet from construction equipment (see Terrestrial Action Area, Table 4.2-1) and considering that there would be intervening trees between construction disturbance and potential nest trees, as well as existing background noise from SR 542, SR 9, Whatcom County's Truck Road and the NF Nooksack, disturbance to potential nesting murrelets may not extend out 0.25 mile from Project activities.

Northwest is proposing to construct the Project from May through September, which is within the breeding period for marbled murrelets and which could negatively affect murrelets if nesting within 0.25 mile of the Project. Approximately 44 potential nest trees (220 platforms) outside of the construction right-of-way and TEWAs would be within 0.25 mile of Project disturbance. Of those trees, 31 potential nest trees would be within 120 yards of Project activities of which only 17 large trees with potential nesting platforms occur in the 7.75-acre marginal habitat area north of Jim Creek. If a murrelet is nesting within one of those 17 potential nest trees, it could be disturbed or disrupted by the Project. However, potential nesting habitat in the Project area is marginal, as discussed above, and unlikely to be used by murrelets for nesting. Five additional trees with potential nesting structures are located near existing MLV 17-7 (TEWA-12 and TEWA-13), between the south bank of the NF Nooksack and Rutsatz Road. No clearing activities are necessary at this existing location where activities would be limited to those needed to purge and fill the abandoned 26-inch pipeline with grout. It is not expected that disturbance generated by activities at MLV 17-7 would disturb or disrupt murrelets if nesting in one of the five potential nest trees.

Northwest would construct the Project during daylight hours (with the exception of dewatering which would be continuous). This schedule would minimize Project effects if a murrelet is nesting within 0.25 mile of the Project (FWS, 2006a) since murrelet flights to and from nesting areas occur mainly near dawn and dusk with peak activity occurring well before sunrise when light levels are low and coastal fog limits visibility (Manley et al., 1992; Burger 2001).

No activities associated with general maintenance and operation of the Project are expected to affect marbled murrelets if nesting in the vicinity of the Project. We require vegetation maintenance activities to occur only between August 1 and April 15 of any year (see Plan, Section VII.A.5), which is generally outside of the critical marbled murrelet breeding period (April 1 through August 5).

Interrelated and Interdependent Effects. No interrelated or interdependent actions are associated with the Project.

Cumulative Effects. FWS and NMFS describe cumulative effects (50 CFR 402.02) as the result of future actions by state or private entities, not involving federal actions, but reasonably certain to occur in the Action Area considered in this BA. Future federal actions that are unrelated to the Project are not considered here because they require separate consultation pursuant to Section 7 of the ESA. There are no actions by state or private entities known or reasonably certain to occur within the Terrestrial Action Area that would cumulatively affect marbled murrelets.

Critical Habitat. No designated critical habitat would be affected by the Project.

5.2.1.4 Conservation Measures

The following conservation measures have been proposed by Northwest to avoid, minimize or reduce potential effects to marbled murrelets and potential nesting habitat from implementation of the proposed Project:

- Remove forested habitat from September 16 through March to eliminate any potential direct impact to individual murrelets or nestlings.
- Maintain large trees and snags on the edge of the Project area, where feasible. During construction activities, Northwest's EI would assess the trees on the edges of the construction right-of-way and TEWAs that could be avoided to retain habitat. The EI would flag trees for protection after the construction right-of-way and TEWAs have been surveyed and prior to clearing activities.
- Construction activities would be limited to day time hours (with the exception of dewatering which would be continuous) which would minimize risk of disturbance to adult murrelets if nesting in trees with potential nesting platforms adjacent to the Project area.
- Replant conifer species outside of and within (according to our Procedures) the permanent easement after construction, which would contribute to the reestablishment of native vegetation and soften the edge effect created from Project construction.

5.2.1.5 Determination of Effects

Species. The Project **may affect** marbled murrelets because:

- Potential marbled murrelet nesting habitat is within the Project area.

The Project is **not likely to adversely affect** marbled murrelets because:

- The Project area is outside of WDFW marbled murrelet detection areas.
- Potential nesting habitat in the area is marginal (Hamer Environmental, 2017; Raphael et al., 2016) and nesting by murrelets is unlikely. Forested habitat in the Project area is dominated by deciduous forest and potential nesting habitat in coniferous trees is isolated.
- No potential nesting habitat would be removed during the breeding season (April 1 through September 15). Potential nesting habitat removed would be on the periphery of existing permanent openings (maintained permanent easement) in deciduous-dominated stands.
- Construction activity would generally occur during daylight hours which would minimize disturbance effects to marbled murrelets if in the vicinity of the Project.
- Based on the available information presented above, as well as the availability of more highly suitable and known occupied habitat to the east of the Project, including designated critical habitat, marbled murrelet use of marginal, potential nesting habitat in the Project area is judged to be discountable (extremely unlikely to occur) or insignificant (the impact would never reach a scale where take occurs).

Critical Habitat. The Project would have **no effect** on designated critical habitat for the marbled murrelet because:

- The closest critical habitat unit, WA-07, is approximately 9.75 miles east of the Project.

5.2.2 *Oregon Spotted Frog*

5.2.2.1 Species Account and Critical Habitat

Status. The Oregon spotted frog was listed as threatened under the ESA in August 2014 (FWS, 2014d). The species had been proposed for listing in August 2013 (FWS, 2013d) and petitioned for listing in May 2004, with a positive (warranted but precluded) 90-day finding issued in 2005, and had been a candidate species since then with Listing Priority of 2 (imminent with high magnitude of threat, see FWS, 2011e).

Threats. Oregon spotted frogs may be extirpated from as much as 90 percent of their historically documented range including all historical locations in California (FWS, 2014d). Thirty to 85 percent of the species' wetland habitats have been lost across its range. Sources of loss include draining wetlands, water diversions, conversion of wetlands to agriculture and livestock grazing, developments adjacent to occupied habitats that alter seasonal hydrology (through creation of impervious surfaces) and occurrence of droughts which have become more frequent in parts of the species' range. Also, riverine functions that promote early successional wetland habitats have been altered including connectivity with floodplains. Beaver (*Castor canadensis*) activities had contributed to a historical mosaic of aquatic habitats and fires burning in summer influenced shallow water breeding habitats the following spring (FWS, 2013d).

Introductions of exotic species, including reed canarygrass that degrades native wetland vegetation, and nonnative predators including bullfrogs and warm water fish species have been and continue to threaten the species. Chytrid fungus infections have been documented in Oregon spotted frog populations and infections were found to be widespread among populations (Pearl et al., 2009). Declines in various amphibian populations have been associated with fungal infections and may have contributed to the demise of Oregon spotted frog populations although some populations appear to be resistant (Padgett-Flohr and Hayes, 2011). There may be additional pathogens that affect Oregon spotted frogs (FWS, 2013d).

Species Recovery. No recovery plan has been published. WDFW developed a Draft Spotted Frog Recovery Plan for the State of Washington (Hallock, 2013) which was listed as endangered in the State in 1997. The Recovery Plan identified two zones in Washington: the Puget Trough Ecoregion and the southern portion of the East Cascades Ecoregion. As noted in the Plan, habitat management is an essential part of the recovery of this species, needing to be improved at occupied sites to enhance population numbers and new populations may need to be established or found. The species will be considered for downlisting to sensitive when the following conditions are achieved (Hallock, 2013):

- Washington has populations in at least six drainages that produce a total of ≥10,000 egg masses annually and each drainage supports a minimum of 500 egg masses from frogs close enough in distribution to exchange genes. These population levels must be met in 7 of 10 years sampled. A declining trend in the last three years would result in an extension of the sampling period for three additional years to verify that the populations are stable or increasing.

- At the time of downlisting, both recovery zones support a minimum viable population.

- Management plans and funding are in place to maintain suitable habitat at each occupied site within the six drainages over the long-term.

Life History, Habitat Requirements and Distribution. The current range of the Oregon spotted frog extends from the Fraser River Sub-basin in southern British Columbia (Haycock, 2000) and adjacent areas in Whatcom County, Washington, south through the Puget Trough lowlands, through the Willamette Valley, to southeast Oregon including Jackson and Klamath counties, and adjacent areas in northern California (FWS, 2011e).

Oregon spotted frogs inhabit emergent wetland habitats in forests, and were historically associated with prairie lakes in the Puget lowlands. They breed in shallow pools with grasses, sedges, and rushes that are not dominated by reed canarygrass near or connected with flowing water (FWS, 2011e). In lower elevations of Washington and Oregon, breeding occurs during February and March (Hallock, 2013), and at higher elevations breeding occurs in late May or early June (Leonard et al., 1993; Bohannon et al., 2016).

Oregon spotted frog oviposition begins when water temperatures are greater than or equal to 8ºC (46.4ºF) (Hallock, 2013). In Whatcom County, egg masses were observed during March and April with embryos hatching in April and as late as the beginning of May (Bohannon et al., 2016). Embryo development to hatching can occur in as little as 10 days with 18–30 days being the typical development time (Hallock, 2013).

Population Status. Population estimates in most sub-basins inhabited by Oregon spotted frogs are insufficient to derive any trends (FWS, 2013k). The best available information indicates declining populations in the lower Fraser River in British Columbia and Middle Klickitat Sub-basin in Washington, but an undetermined trend in Oregon (FWS 2013d).

In 2011, there were 39 populations of Oregon spotted frog locations (sites) known in the United States, with eight in Washington and 31 in Oregon (FWS 2011d). Oregon spotted frogs have not been documented in recent surveys in California. While it is possible that other populations of Oregon spotted frogs may be located in the future, critical habitat units were established in sub-basins with positive detections no older than 2000.

The extant Black Slough population complex in Whatcom County is closest to the Project area. In 2011, Oregon spotted frog egg masses were found on two privately-owned, adjacent parcels near Van Zandt along the Black Slough (Hallock, 2013). A third breeding area, also on private property, was found in 2012. A total of 116 egg masses and 232 breeding adults were reported at the Black Slough site in 2012 (Hallock, 2013). At that same time, 45 egg masses and 90 breeding adults were reported at the Sumas River site and 157 egg masses and 314 breeding adults in the Whatcom County-portion of the Samish River population. In all of Washington State reported for 2012, there were 3,684 egg masses and 7,368 breeding adults in six population complexes (Hallock, 2013).

Critical Habitat. Critical habitat for the Oregon spotted frog was finalized in May 2016 (FWS, 2016c) and includes three sites in Whatcom County, Unit 1-Lower Chiliwack River, Unit 2-SF Nooksack, and Unit 3-Samish River overlapping Whatcom and Skagit counties. Critical habitat (Unit 4) has also been designated in the Black River drainage complex in Thurston County, Washington. While it is possible that other populations of Oregon spotted frogs may be

located in the future, critical habitat units were established in sub-basins with positive detections no older than 2000 (FWS, 2016c).

5.2.2.2 Environmental Baseline

Species Presence. Surveys conducted in 2011 through 2013 by WDFW (Bohannon et al., 2016) documented Oregon spotted frog concentration areas and breeding at the three critical habitat units in Whatcom County. The surveys included several sites that were unoccupied including a wetland proximate to the NF Nooksack in the vicinity of the Project area (see Figure 1, Bohannon et al., 2016). None of the other wetlands surveyed within the Nooksack River-Frontal Bellingham Bay 5th field watershed was occupied by Oregon spotted frogs, which were only found in the Sumas, SF Nooksack and Samish watersheds (see Figure 2, Bohannon et al., 2016).

Habitat. The Project area is hydrologically connected to occupied habitats on the SF Nooksack; critical habitat Unit 2-SF Nooksack is approximately 1.7 miles southwest of the Project and extends for approximately 3.5 river miles along Black Slough and adjacent seasonally wetted areas from the headwaters to the confluence with the SF Nooksack. To determine if wetlands in the Project area are suitable spotted frog habitat, ten palustrine emergent, scrub-shrub and/or forested wetland habitats potentially affected by the proposed Project were evaluated (The Watershed Company, 2017; provided in attachment E) following a two-step (or two-tier) procedure recommended by Gemain and Cosentino (2004). Tier 1 evaluates each potential area considering five factors that a wetland must exhibit to be considered potential Oregon spotted frog habitat, and a sixth criterion if an area is not large enough but demonstrates connectivity to other suitable areas. Areas that satisfy all the Tier 1 factors are then further evaluated considering Tier 2 criteria for breeding, summer and winter habitat conditions. In the Project area, three wetlands (wetlands A, C and G) satisfy all Tier 1 criteria, but none of those wetlands satisfies Tier 2 criteria for breeding habitat because wetlands A, C and G are dominated by ungrazed reed canarygrass and the low-gradient shallows are primarily limited to the maintained pipeline easement (The Watershed Company, 2017; see attachment E for additional information). Dense, tall stands of reed canarygrass have been shown to limit the suitability of shallow wetland habitats for reproduction by Oregon spotted frogs (Kapust et al., 2012). Suitability is enhanced if reed canarygrass is mowed (Kapust et al., 2012) and/or grazed by livestock to maintain openings (Bohannon et al., 2016). Also, dominance of palustrine forested wetland throughout most of the Project area make it unsuitable for breeding (Kahlo, 2016).

Critical Habitat. There is no critical habitat within the Action Area.

5.2.2.3 Environmental Effects

Direct and Indirect Effects

Construction of the Project could affect Oregon spotted frogs if they are present in the Action Area through one or more of the following pathways:

- Interference with key life functions.
- Mortality by construction machinery and vehicles.

- Mortality during salvage operations.
- Loss of aquatic habitats.
- Accidental release of fuels and entry of other petroleum products into surface waters.
- Application of herbicides to control noxious weeds near waterbodies.

Interference with Key Life Functions. Stranding of egg masses is the main threat to developing Oregon spotted frog embryos (Hallock, 2013). In Whatcom County, egg masses have been observed from March through April, with embryos hatching in April and the beginning of May (Bohannon et al., 2016). The Project is not expected to affect egg masses since it would be initiated in late May. Larval development (tadpole stage) lasts for about four months and metamorphosis occurs during late summer; both life phases would coincide with Project construction. Larval tadpoles can suffer significant mortality if they become isolated in pools and face eventual desiccation as well as low levels of dissolved oxygen during summer (Hallock, 2013). The Project could result in affecting larval and juvenile Oregon spotted frogs, if present within the Action Area.

Mortality during Construction. Direct mortality of Oregon spotted frogs could occur during construction and right-of-way maintenance operations, if present in emergent wetlands in the Project area. Individuals may also be directly affected by construction of the Project if they are killed by vehicles traveling to and from construction sites. Amphibians are more active at dusk and dawn and would be more susceptible during those time periods (Leedy, 1975; Bennett, 1991; Forman and Alexander, 1998; Trombulak and Frissel, 2000). Project activities would generally occur during daylight hours and so possible mortality of spotted frogs, if present, would be minimized.

Loss of Aquatic Habitats. The distribution of Oregon spotted frogs has been limited throughout their range by the loss of emergent marsh habitat and seasonal use of microhabitats within wetland complexes; alteration of hydrological regimes in marsh habitats due in part to groundwater recession is counted as one of several threats to the species (Cushman and Pearl, 2007). Activities that increase water fluctuations are particularly detrimental to Oregon spotted frogs, since egg masses are most often laid in the shallow margins of water bodies where they are particularly susceptible to freezing or desiccation (McAllister and Leonard, 1997). Rapidly dropping water levels can strand egg masses, subjecting them to freezing or desiccation. Small wetlands are particularly vulnerable because they are more difficult to maintain as functional communities and are less resistant to changes in hydrology and water quality than larger wetlands (Richter and Azous, 1995).

Water drawdown during construction of the Project could affect potential Oregon spotted frog habitat in nearby wetlands within the Action Area. It is not expected that spotted frogs would be in the Project vicinity because there are no records of spotted frog occurrences in the immediate vicinity of the Project area or in the 5th field watershed in which the Project is located. Also, potential habitats in the Project area were evaluated as unsuitable for Oregon spotted frogs.

Mortality during Salvage. As noted above, the Project could affect larval and juvenile Oregon spotted frogs, if present within the Action Area, as groundwater is removed with effects

to surface water. A Fish Exclusion and Relocation Plan (see attachment C) has been proposed to collect anadromous salmonids from surface waters in the Jim Creek system as water is drawn down. Although fish are mostly expected to be salvaged and relocated, other species encountered including amphibians, crustaceans and mollusks would be relocated in a manner similar to that described for fish. Animals salvaged under the plan would be relocated to unaffected water, potentially Jim Creek downstream from the Project area and/or the NF Nooksack. Animals that are not salvaged would likely die as surface water is removed. Adult frogs appear to be less susceptible to mortality or injury by electrofishing than fish. However electrofishing at high frequencies (60 Hz) produced short-term effects on adult frog feeding and jumping abilities (Allen and Riley, 2012). Seining would be the primary method utilized for fish and amphibian salvage rather than electrofishing.

Fuel and Chemical Spills. Potential Oregon spotted frog habitat in the Jim Creek system could be adversely affected if petroleum products were accidentally discharged into groundwater and surface aquatic environments. Such materials are toxic to algae, invertebrates, fish and amphibians. Of the products likely to be present during pipeline construction, data compiled from a wide range of sources indicate that diesel fuels and lubricating oils are considerably more toxic to aquatic organisms than other, more volatile products (gasoline) or heavier crude oil (Markarian et al. 1994). Lytle and Peckarsky (2001) showed that release of diesel fuel in freshwater habitats significantly reduced aquatic invertebrate densities and species richness at least 3 miles downstream from the release but invertebrate densities recovered within a year. Impacts to aquatic habitats that primarily affect aquatic substrates – hence spawning, incubating and rearing habitats – can remain for much longer periods (Markarian et al., 1994).

Equipment used to construct the pipeline across waterbodies can potentially release hydraulic fluid that includes a variety of compounds, most commonly being mineral oil-based, organophosphate esters and polyalphaolefins (U.S. Department of Health and Human Services, 1997). Release from machinery can occur through faulty seals, hoses, sumps and reservoirs, or general system failure. Components of mineral oil and polyalphaolefins do appear to bioaccumulate in animals whereas larger molecular constituents in organophosphate esters can concentrate in fish, primarily partitioning in fat tissue (U.S. Department of Health and Human Services 1997). In general, toxicity of organophosphate esters is greater than either mineral oil or polyalphaolefin-based hydraulic fluids for inhalation, oral and dermal for humans but toxicities have not been clearly described for aquatic invertebrates, fish or amphibians and would be dependent on specific chemical components (U.S. Department of Health and Human Services, 1997).

Inadvertent spills of fluids used during construction, such as fuels and lubricants, could contaminate groundwater, wetland soils and vegetation. To minimize the potential for spills and any impacts from such spills, Northwest's Spill Plan (see attachment B) would be implemented. In general, hazardous materials, chemicals, fuels, lubricating oils and concrete-coating activities would be not be stored or occur, nor would refueling operations be conducted within 150 feet of a wetland or waterbody in accordance with our Procedures and Northwest's Spill Plan (see attachment B).

Herbicide Application. Northwest would minimize the potential spread and infestation of weeds along the construction right-of-way through implementation of BMPs outlined within the ECRP (see attachment A). The ECRP includes reconnaissance surveys along the construction

right-of-way to determine the presence of noxious weeds; outlines the methods that would be used to control Class A weeds, if observed; requires cleaning of construction equipment and vehicles prior to moving them onto the construction right-of-way, as well as leaving the construction right-of-way to prevent the import/export and spread of weeds; and details vegetation clearing and grading requirements in areas of noxious weeds.

Only herbicides that are approved for use within treated lands (private, state, federal or tribal) would be used to treat noxious weeds. In general, most impact to waterbodies occurs from direct overspray or drift of herbicides (aerial applications) as well as leaching through soils into groundwater or as they are carried by surface/subsurface runoff (Tu et al., 2001). According to the Pacific Northwest Weed Management Handbook (see Peachey et al., 2007), herbicides used in forests to control brush and weed-trees could include one of the following: 2,4-D, glyphosate, imazapyr, picloram and triclopyr, which are applied during spring or fall dormancy. Clopyralid may be used during summer to control thistles, other composites, and legumes while not damaging conifers. The ester form of herbicides is more toxic to fish and other aquatic species than salt or acid forms because esters are readily adsorbed through skin and gills.

Herbicides potentially used during the project breakdown over various periods of time, marked by the average half-life (the time it takes for the herbicide concentration to decline by 50 percent due to microbial metabolism – dependent on the microbial population, environmental pH, soil moisture and temperature – mineralization, and/or photolysis:

- 2,4-D—averages 10-day half-life in soils, less than 10 days in water. Salt formulations with low toxicity are registered for use against aquatic weeds. Acute exposure of 2,4-D to leopard frog tadpoles reduces their activity and feeding but does not appear to be a particularly strong threat to larvae (Ryan et al., 2005).

- Glyphosate—ranges from several weeks to years, but averages two months. In water, glyphosate is rapidly dissipated through adsorption to suspended and bottom sediments, and has a half-life of 12 days to 10 weeks. Toxicity of glyphosate-based pesticides to amphibians varies with developmental stage because there is some evidence that some formulations may interfere with metamorphosis (Howe et al., 2004).

- Imazapyr—ranges from one to five months in soil. In aqueous solutions with photodegradation the half-life may be two days. It has low toxicity to fish and algae, and submerged vegetation is not affected. Adverse effects to terrestrial and aquatic animals appear to be unlikely (Durkin and Follansbee, 2004).

- Picloram – ranges from one month to three years in soil, and two to three days in water. It is characterized as slightly to moderately toxic to aquatic species, and was shown to be slightly toxic to tadpoles (Tu et al., 2001; Johnson, 1976).

- Triclopyr – averages 30 days in soils, and one to four days in water. Toxicity to aquatic organisms is variable depending on life stage, pH, available sunlight, but appears to be overall low when applied correctly (Tu et al., 2001; Antunes-Kenyon and Kennedy, 2004; Durkin and Follansbee, 2003).

The potential for adverse effects to Oregon spotted frogs and other aquatic species by these herbicides appears to be extremely remote, especially since application would be at least 100 feet from wetlands and waterbodies. Given low toxicities and short half-lives in soil and water, expected effects of herbicides to amphibians would be discountable and insignificant.

Interrelated and Interdependent Effects. No interrelated or interdependent actions are associated with the Project.

Cumulative Effects. FWS and NMFS describe cumulative effects (50 CFR 402.02) as the result of future actions by state or private entities, not involving federal actions, but reasonably certain to occur in the Action Area considered in this BA. Future federal actions that are unrelated to the Project are not considered here because they require separate consultation pursuant to Section 7 of the ESA. There are no actions by state or private entities known or reasonably certain to occur within the Aquatic Action Area that would cumulatively affect Oregon spotted frogs.

Critical Habitat. No designated critical habitat would be affected by the Project.

5.2.2.4 Conservation Measures

A Fish Exclusion and Relocation Plan (see attachment C) has been proposed to address the handling, removal and relocation of fish that may be present during dewatering activities associated with construction of the Project. This area includes Jim Creek and two other tributaries to Jim Creek. The Project and resulting area, requiring dewatering to install the new 30-inch pipeline, also include a complex floodplain wetland mosaic, with areas of ponded water that may support fish life. This area coincides with the Aquatic Action Area. In general, fish, amphibians and other aquatic organisms would be released downstream from the Project area into suitable habitats in Jim Creek or the NF Nooksack to ensure that they could access adequate freshwater and move away from the Project area. Information about capture, injuries or mortalities to ESA-listed or proposed species would be documented and provided to NMFS or FWS and WDFW if appropriate, depending on which agency has jurisdiction over that species, within a timeframe specified by each agency.

5.2.2.5 Determination of Effects

Species. The Project **may affect** Oregon spotted frogs because:

- The Project area is hydrologically connected to Black Slough on the SF Nooksack which is occupied by the Oregon spotted frog; and
- Oregon spotted frogs occur in two 5th field watersheds that are adjacent to the Nooksack River-Frontal Bellingham Bay 5th field watershed within which the Project is located.

However, the Project **is not likely to adversely affect** Oregon spotted frogs for the following reasons:

- None of the other wetlands surveyed from 2011 to 2013 within the Nooksack River-Frontal Bellingham Bay 5th field watershed was occupied by Oregon spotted frogs, which were only found in the Sumas, SF Nooksack and Samish watersheds (see Figure 2, Bohannon et al., 2016).

- There are no records of spotted frog occurrences in the immediate vicinity of the Project area or in the 5th field watershed in which the Project is located.
- Based on a two-tiered procedure developed by WDFW, Gemain and Cosentino (2004), wetlands within the Project area are not suitable for reproduction by Oregon spotted frogs because they are dominated by ungrazed reed canarygrass and the low-gradient shallows that are primarily limited to the maintained pipeline easement (see attachment E). Dense, tall stands of reed canarygrass have been shown to limit the suitability of shallow wetland habitats for reproduction by Oregon spotted frogs (Kapust et al., 2012).
- Dominance of palustrine forested wetland throughout most of the Project area make it unsuitable for breeding (Kahlo, 2016).
- Based on the available information presented above, the presence of Oregon spotted frogs and their unlikely use of potential breeding habitat in the Project area is judged to be discountable (extremely unlikely to occur), or insignificant (the impact would never reach a scale where take occurs).

Critical Habitat. The Project would have **no effect** on critical habitat for the Oregon spotted frog.

5.2.3 *Chinook Salmon*

5.2.3.1 Species Account and Critical Habitat

Status. Chinook salmon in the Puget Sound ESU is listed as threatened (NMFS, 1999). The Puget Sound ESU includes naturally produced Chinook salmon that inhabit streams below impassable natural barriers, as well as 26 artificial propagation programs including Kendall Creek Hatchery upstream from the Project area (NMFS, 1999 and 2014a). In 2011, NMFS re-evaluated the listed ESU and re-affirmed that short-term and long-term trends in abundance for Puget Sound Chinook salmon were declining and that fish in the ESU remained at a moderate risk of extinction (NMFS, 2011a).

Threats. In 2005, threats included extensive blockage and degradation of habitat within the Puget Sound ESU. Blockages include dams, water diversions, shifts in flows from hydroelectric projects and flood control developments (Ruckelshaus and Sands, 2005). Habitat degradation included high temperatures, sedimentation, streambed instability, estuarine loss, loss of large woody debris and loss of pool habitats; all of these threats are present (Ruckelshaus and Sands, 2005). In addition, ocean harvest of Chinook salmon has been very high with harvest rates on some of the stocks in the Puget Sound ESU at more than 90 percent. There is an extensive hatchery system within the ESU that has utilized Green River hatchery stocks extensively over time so that the genetic diversity and fitness of naturally spawning populations has been reduced (Ruckelshaus and Sands, 2005).

Species Recovery. A recovery plan for Puget Sound Salmon was developed by the Shared Strategy for Puget Sound Development Committee (2007) and adopted by NMFS in 2007. To achieve recovery of salmon, the plan identified the following focal points: 1) estuaries, 2) floodplains, 3) riparian areas, 4) water quantity, 5) water quality/pollution, 6) fish access, 7) Puget Sound shoreline and marine areas (nearshore), 8) harvest management, 9) hatchery

management, and 10) integration of factors (harvest, hatcheries, habitat) with the ultimate goal of self-sustaining salmon populations that can be harvested to the benefit of the region's economic vitality and prosperity. The second volume of the Shared Strategy Plan provided strategies and actions for Chinook salmon populations in specific watersheds. NMFS (2006) included a supplement to the Shared Strategy Plan in which they provided criteria to determine when the ESU would be covered in terms of the listing factor criteria.

Life History, Habitat Requirements and Distribution. Chinook salmon are known to have one of the most diverse life cycles of the Pacific salmon (Healey, 1991; Raleigh et al., 1986). Times of the year for various stages of their life cycles vary considerably, as do the habitat requirements in the various phases of their lives. Two distinct types of life cycles can occur after fry emergence, the freshwater stream-type and ocean-type Chinook salmon. The stream-type remains in freshwater for one or more years before migrating to saltwater. Some of the stream-type Chinook salmon have been documented to become sexually mature without ever entering the saltwater environment. This type of Chinook salmon travels to sea during their first year of life lives most of the time in coastal waters, and return to natal streams within a few weeks of spawning (Healey, 1991).

Spawning bed characteristics utilized by Chinook salmon vary considerably. Depths can range from a few centimeters to several meters, and can be located in streams from a couple of meters wide to sections of larger rivers like the Columbia River in Oregon. Little agreement exists on the minimum and maximum depths and velocities for spawning, as well as how those differences may be differentially limited by stream and ocean type Chinook salmon (Healey, 1991).

Recommended temperatures for Chinook salmon spawning range from 5.6° to 13.9°C (42°F to 57°F). For successful incubation, temperatures can range from just above freezing to 10.0°C (50°F) However, recommended incubation temperatures are from 5.0° to 14.4°C (41°F to 58°F), and optimum temperature for egg development is 11.0°C (52°F). For fingerlings, the optimum temperature is listed at 17.0°C (63°F). The upper lethal limit for Chinook salmon is 25.1°C (77°F) (Beauchamp et al., 1983). Other reports list a temperature range for eggs of 16°C (61°F) before 50 percent mortality is reached. Time to attain 50 percent hatch related to temperature was 159 days at 3°C and 32 days at 16°C (Healey, 1991).

Preferred water depth ranges vary widely for Chinook salmon during different phases of their life cycle and depending upon their race. They will spawn in rivers ranging from 0.10 m to 10 m. Preferred depths for spawning vary by race, with spring and fall Chinook salmon preferring depths greater than or equal to 0.24 m and summer Chinook salmon preferring depths greater than or equal to 0.30 m. Juvenile Chinook salmon utilize surface water early in their saltwater stage before using water depths as great as 60 m (Beauchamp et al., 1983).

Chinook salmon eggs require a minimum of dissolved oxygen concentrations at 5.0 mg/L, while juveniles avoid concentrations less than 4.5 mg/L with a temperature of 20.0°C (Beauchamp et al., 1983). Mortality increases rapidly at dissolved oxygen concentrations below 13 ppm (Healey, 1991).

Spawning substrate research has noted several sizes of substrate being selected for at various sites. One study found substrate size to range from 6 cm to 14 cm, and another study found

substrate size to range from 1.3 cm to 10.2 cm. Juvenile Chinook salmon of the freshwater stream type select for large boulder habitat, while estuary juveniles select for a wide range of substrate including mud, sand, gravel, and eelgrass (Beauchamp et al., 1983).

Freshwater rearing Chinook salmon tend to prey mostly on larval and adult insects. One study in the Columbia River system found the most abundant prey items to include dipteran larvae, beetle larvae, stonefly nymphs and leaf hoppers. The prey items are similar to that of other salmonids in freshwater systems, but competition is reduced due to the different habitat types primarily occupied by the different species (Healey, 1991).

Population Status. The Puget Sound Chinook salmon ESU includes naturally produced Chinook salmon that inhabit streams below impassable natural barriers, as well as 26 artificial propagation programs including Kendall Creek Hatchery upstream from the Project area (NMFS, 1999 and 2014b). In 2011, NMFS re-evaluated the listed ESU and re-affirmed that short-term and long-term trends in abundance for Puget Sound Chinook salmon were declining and that fish in the ESU remained at a moderate risk of extinction (NMFS, 2011a).

Two types of Chinook salmon return to the Nooksack Sub-basin each year: spring-run (early) and fall-run (late). In the Project area the NF Nooksack spring-run population is native in origin, consisting of both wild and hatchery production. Spring-run Chinook salmon tend to remain in freshwater for one or two winters before migrating to salt water, whereas fall-run Chinook salmon move within several weeks of emergence from spawning gravels to rear in the estuary. Chinook salmon will remain in the ocean from 2 to 8 years before they mature and return to their natal streams to spawn in larger streams and high velocity areas with larger gravel (Wydoski and Whitney, 1997; NMFS, 2007a). Kendall Creek Hatchery, located approximately 6.9 miles upstream from the Project area, supplements the NF Nooksack spring-run Chinook salmon population to assist in restoring indigenous spring Chinook salmon to self-sustaining levels of 2,000 natural-origin recruit spawners (Puget Sound Indian Tribes and WDFW, 2004). NMFS (1999) considers the Kendall hatchery essential for recovery of the stock. Within the Project area, fall-run Chinook salmon are an introduced population (Samish/Mainstem Nooksack) that historically did not exist in the Nooksack Sub-basin.

Approximate timing of Chinook salmon life stage use in the Nooksack Sub-basin is shown in Figure 5.2-2. Adult spring-run Chinook salmon begin entering the Nooksack River in February with the run continuing into August. The fish begin moving onto spawning riffles in July and continue through October. Fall-run Chinook salmon enter the Nooksack River starting in June or July, with spawning occurring in September and October; spawning is usually completed in November. Both spring-run and fall-run Chinook salmon spawn and rear juveniles in the mainstem NF Nooksack and larger tributaries of the NF Nooksack from the confluence of the SF Nooksack up to Nooksack Falls (spring-run and fall-run) and MF Nooksack below the diversion dam (spring-run) (WDFW, 2016c; WDFW, 2016c; StreamNet, 2012).

Spring Chinook Salmon												
Life Stage/Activity	**Jan**	**Feb**	**Mar**	**Apr**	**May**	**Jun**	**Jul**	**Aug**	**Sep**	**Oct**	**Nov**	**Dec**
Upstream Adult Migration												
Adult Spawning												
Intragravel Development												
Juvenile Rearing												
Juvenile Out-Migration												???
Fall Chinook Salmon												
Life Stage/Activity	**Jan**	**Feb**	**Mar**	**Apr**	**May**	**Jun**	**Jul**	**Aug**	**Sep**	**Oct**	**Nov**	**Dec**
Upstream Adult Migration						???						???
Adult Spawning												???
Intragravel Development												
Juvenile Rearing												
Juvenile Out-Migration												

Source: WRIA1 Salmon Recovery Board, 2005; Williams et al., 1975
??? indicates possible activity in that month

Figure 5.2-2
Approximate Timing of Winter-run and Fall-run Chinook Salmon in the Nooksack Sub-basin

Analysis of mapped distributions of fall-run and spring-run Chinook salmon (available from StreamNet, 2012) reveals that more stream miles in the Nooksack Sub-basin (HUC 17110004) support life functions (migration, rearing, spawning) by fall-run Chinook salmon (256 stream miles) than by spring-run Chinook salmon (162 stream miles). A similar distinction occurs in the Nooksack River-Frontal Bellingham Bay 5th Field watershed that includes a small portion of the NF Nooksack and Project area. Fall-run Chinook salmon utilize more stream miles than spring-run Chinook salmon, spawning (and rearing) in 67 miles of the Nooksack River-Frontal Bellingham Bay 5th Field Watershed and tributaries compared to 10 miles of spawning (and rearing) habitat used by spring-run Chinook salmon (see Table 5.2-1).

Table 5.2-1
The Extent of Habitats (stream miles) Utilized by Fall-run and Spring-Run Chinook Salmon in the Nooksack River-Frontal Bellingham Bay 5th Field Watershed

	Miles of Stream Habitat	
Habitat Function	**Fall-Run Chinook**	**Spring-Run Chinook**
Migration Only	42.25	30.20
Rearing and Migration	19.68	10.11
Spawning and Rearing	66.94	10.03
Total	**128.87**	**50.35**
Source: StreamNet, 2012		

WDFW has collected carcass and redd counts in the NF Nooksack and MF Nooksack drainages to estimate spring-run Chinook salmon escapement for the NF Nooksack and MF Nooksack spring-run Chinook salmon population. Escapements have increased as a result of the Kendall Creek Hatchery program, but the natural origin spawners are still doing poorly (WDFW, 2016d; see Figure 5.2-3). From 2005 through 2013, escapement levels have averaged 1,427 natural spawners in the NF (WDFW, 2014), of which approximately 88 percent of recent spawners have been returns from the Kendall Creek Hatchery rebuilding program (WDFW,

2016d). As a result, the current status of the NF (combined with MF Nooksack) spring-run Chinook salmon stock is critical.

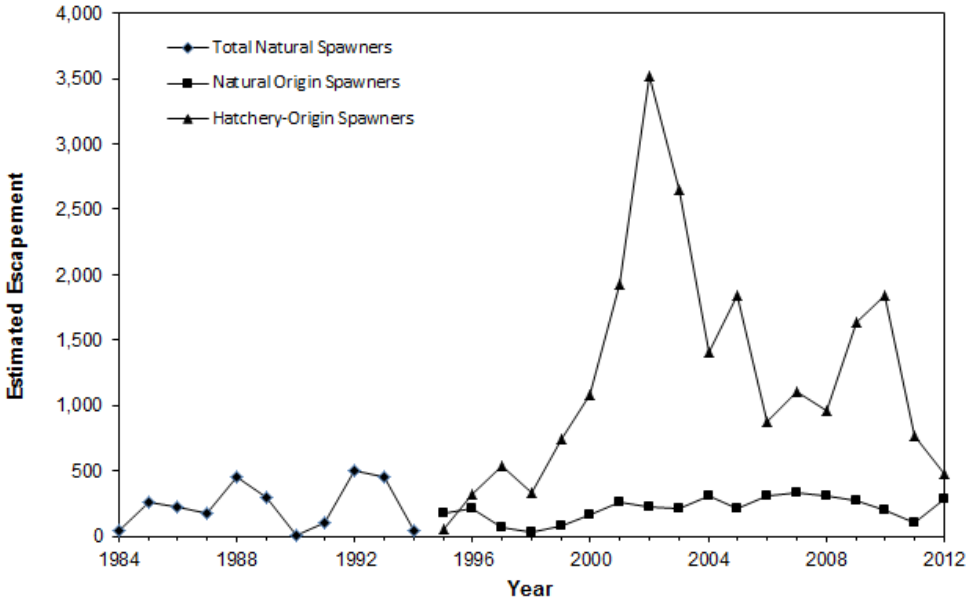

Figure 5.2-3
Estimates of Spring-Run Chinook Salmon Escapement for the NF Nooksack and MF Nooksack Populations, 1984 to 2012

Critical Habitat. In 2005, critical habitat was designated for the Puget Sound ESU and included all marine, estuarine and river reaches accessible to listed Chinook salmon, as well as the adjacent riparian vegetation, including accessible reaches in the Nooksack Sub-basin (NMFS, 2005a) including the NF Nooksack. NMFS (2000) defined riparian zones as the "area adjacent to a stream that provides the following functions: shade, sediment transport, nutrient or chemical regulation, streambank stability and input of large wood debris or organic matter." Within the Project area, critical habitat has been designated for Chinook salmon freshwater spawning, rearing and migration, including substrate to support spawning, incubation and larval development (NMFS, 2005b).

Included in critical habitat designation are riverine habitats supporting the following Primary Constituent Elements (PCEs):

1) Freshwater spawning sites with water quantity and quality conditions and substrate supporting spawning, incubation and larval development;

2) Freshwater rearing sites with water quantity and floodplain connectivity to form and maintain physical habitat conditions and support juvenile growth and mobility; water quality and forage supporting juvenile development; and natural cover such as shade, submerged and overhanging large wood, logjams and beaver dams, aquatic vegetation, large rocks and boulders, side channels, and undercut banks; and

3) Freshwater migration corridors free of obstruction and excessive predation with water quantity and quality conditions, and natural cover such as submerged and overhanging

large wood, aquatic vegetation, large rocks and boulders, side channels, and undercut banks supporting juvenile and adult mobility and survival (NMFS, 2005a).

PCEs for Chinook salmon within estuarine habitats, nearshore marine areas, and offshore marine areas were also identified but are not included here since none of those habitats occurs within the Action Area.

5.2.3.2 Environmental Baseline

Species Presence. SalmonScape, WDFW's interactive, computer mapping system (http://apps.wdfw.wa.gov/salmonscape/), shows that spring and fall Chinook salmon spawn in the NF Nooksack in the immediate vicinity of the Project area as well as upstream and downstream. Spring Chinook salmon juvenile rearing has been documented in the Nooksack River mainstem, downstream from the confluence of the NF Nooksack and SF Nooksack. Presence of fall Chinook salmon has been documented in Jim Creek but presence of spring Chinook salmon has not. No specific life history functions for fall run Chinook salmon have been documented in Jim Creek. However, Jim Creek provides quiet channel habitat that may be utilized for Chinook salmon juvenile rearing, January through December, discussed by Smith (2002) although not documented by WDFW

Habitat. The lower NF Nooksack has recently been assessed by the Nooksack Tribe Natural Resources Department within 14 reaches, including a 1.6-mile reach (RM 36.7 to RM 38.3) that incorporates the proposed Project (see Hyatt, 2007). This reach of the NF Nooksack is the most actively shifting section of the river, creating a wide and heavily braided channel with extensive islands and back channel complexes. The channel has increased in width from 230 meters (755 feet) in 1938 to 440 meters (1,444 feet) in 2005. Wetted habitat in the area is evenly split among riffle, glide and slough habitat, providing productive habitats for salmon and other native resident fish. This area of the NF Nooksack also has the largest area of isolated pools that are connected at high flow, but are disconnected from the NF Nooksack mainstem at low flows. The NF Nooksack floodplain is about 65 percent of historic channel migration zone forest cover, close to restoration goals of 70 percent (Nooksack Indian Tribe, 2016), although only 1.3 percent of the floodplain has enough mature timber that can contribute to LWD loading (Hyatt, 2007) and consequently, there is little recruitment of LWD.

In the reach of the NF Nooksack near the Project, LWD loading is relatively high in comparison to other portions of the NF Nooksack as a result of channel avulsion that occurred in October 2003 that eroded approximately 17 acres of mostly mature coniferous timber. Within the 1.6-mile reach including the Project area, there were seven key LWD key pieces greater than $9m^3$ and 14 LWD jams that were large enough to affect the channel at high flows; on average, there were 0.11 key pieces per 100 meters of channel (Hyatt, 2007). Additionally, Northwest installed ELJs along approximately 500 feet of the north bank of the NF Nooksack in 2015. The ELJs were designed to prevent exposure of the existing 30-inch pipeline during erosion of the right bank.

Critical Habitat. Critical habitat was designated within the NF Nooksack in 2005. Critical habitat was not designated in Jim Creek.

5.2.3.3 Environmental Effects

Direct and Indirect Effects

Construction of the Project could directly and/or indirectly affect Chinook salmon present in the Action Area through one or more of the following pathways:

- Interference with key life history functions for native species.
- Mortality and/or injury of fish from stranding in surface waters drawn down during pumping groundwater and during fish salvage.
- Disruption of hyporheic exchange with the NF Nooksack.
- Turbidity generated during pumped groundwater discharge into Jim Creek and the NF Nooksack.
- Removal of riparian vegetation could reduce shade, which could increase water temperatures in Jim Creek.
- Accidental release of fuels and entry of other petroleum products into surface waters.
- Application of herbicides to control noxious weeds near waterbodies.

Interference with Life History Functions. WDFW indicated (during an interagency Project meeting held in February 2017) that the standard in-water work windows which are typically applied to HPA permits would not be applied to this atypical Project. WDFW stated that the standard recommended in-water work period for the Project area is typically a three-week period between late-July and mid-August. However, the U.S. Army Corps of Engineers lists June 15 to July 31 for the in-water work period for the Project area. There is considerable variation of life phase timing between anadromous fish species but, generally, construction of the Project (June through September) would coincide with upstream migration and juvenile rearing for fall and spring Chinook salmon (see Figure 5.2-2). Adult spawning and embryonic intragravel development in the NF Nooksack by spring Chinook salmon may occur in the vicinity of the Project at some time during construction. The primary habitat functions of Jim Creek for fall and spring Chinook salmon are assumed to be for use during upstream migration, juvenile rearing and juvenile out-migration. Block-screening placed across Jim Creek downstream of the construction right-of-way and damming the upper Jim Creek connection with NF Nooksack prior to initiating construction (see Fish Exclusion and Relocation Plan in attachment C) would eliminate its use by Chinook salmon during the construction period.

Mortality and/or Injury of Fish by Stranding and During Salvage. The dewatering program would include the use of well points drilled on either side of the new 30-inch trench alignment. A typical system may include wells installed on 30-foot centers, extending 15 feet below the bottom of the trench; containing a filter casing surrounded by filter media (pea rock). A pump would be installed in each casing with a discharge riser connected at the surface to a header pipe that connects all of the well points together. The common header pipe discharge would be directed into additional piping and/or hoses that would be routed to the west of the Project area to allow groundwater discharge directly into Jim Creek or the NF Nooksack. The

piping and hoses would be appropriately sized for the volume of water to be discharged. It should be understood that site-specific conditions at the time of construction would dictate the dewatering system configuration including well location/depth/number, pump performance requirements, header sizing and discharge pipeline configuration. The Jim Creek system has not been precisely defined but is known to include several channels and ponds that are likely to be interconnected by groundwater, much or all of which may have hyporheic connection with the NF Nooksack.

It is not possible to estimate numbers of anadromous species in the Jim Creek system that may be stranded between blocknets and cofferdams installed immediately prior to groundwater removal and that may be salvaged (see attachment C) during construction. StreamNet (2012) has mapped Jim Creek as chum (*Oncorhynchus keta*) and coho salmon migration habitat, extending for a length of 1.02 stream miles upstream from the lower confluence with the NF Nooksack. It is assumed that Jim Creek may be utilized during migration by other salmonids and may potentially be used as quiet off-channel habitat for juvenile rearing by various species (discussed by Smith, 2002) including Chinook salmon, even though not documented.

StreamNet (2012) provides maps of streams occupied by species utilizing various stream lengths as functional habitat: 1) migration only, 2) rearing and migration, and 3) spawning and rearing. Table 5.2-2 provides the total linear distances, in stream miles, of those habitats for fall Chinook salmon within the Nooksack Sub-basin (HUC 17110004). Table 5.2-2 also shows the relative importance of Jim Creek, if it was used by any of the species for the specific functional habitat. The relative importance of Jim Creek as specified habitat and total habitat for each of the species listed in the table is small in comparison with the Nooksack Sub-basin (HUC 17110004). This analysis suggests that numbers of Chinook salmon potentially stranded during the dewatering process would be a small fraction of numbers expected within the remaining Nooksack Sub-basin during the time of construction. For fall Chinook salmon, use of Jim Creek during construction would coincide with adult stream migration, juvenile rearing and juvenile out-migration (see Figure 5.2-2).

Table 5.2-2
The Extent (stream miles) of Fall Chinook Salmon Migration, Spawning, and/or Rearing Habitats in the Nooksack Sub-basin (HUC 17110004) in Comparison to Assumed Extent of Habitats in Jim Creek [1]

Fall Chinook Habitat Use	Extent of Habitats	
	Nooksack Sub-basin (Stream miles)	Total Habitat Assumed in Jim Creek [1]
Migration Only	112.36	0.91%
Rearing and Migration	20.71	4.93%
Spawning and Rearing	123.42	0.83%
Total Mapped Habitat	256.48	0.40%

Source: StreamNet, 2012.
Notes:
[1] StreamNet has mapped 1.02 miles of coho migration-only habitat which is assumed to be potential migration and/or rearing habitat for other anadromous species.

A Fish Exclusion and Relocation Plan (see attachment C) has been proposed to collect anadromous salmonids and other fish and aquatic species from surface waters in the Jim Creek system as water is drawn down. Fish salvaged under the plan would be relocated to unaffected water, potentially Jim Creek downstream from the Project area and/or the NF Nooksack. Seining would be the primary method utilized for fish salvage rather than electrofishing because salmonids in freshwater are susceptible to deleterious effects of electrofishing with high mortality in the short term, but also high long-term mortality after release, possibly due to high incidence of spinal injuries and internal hemorrhage (Snyder, 2003 and 2004). Also, some portion of fish salvaged may expire or not survive relocation into habitats different from those from which they were salvaged. A variety of physiological stress responses to extreme capture and holding conditions have been related to exhaustive exercise, which can adversely affect survival once fish are released (Gallaugher and Farrel, 1999).

Disruption of Hyporheic Exchange. The hyporheic zone is defined by the extent of surface-subsurface mixing, the hyporheic exchange that moves surface water into the surrounding alluvium and back to the river again through the porous sediment surrounding a river (Tonina and Buffington, 2009). The downwelling flows of surface water supply the wetted hyporheic zone with dissolved oxygen, which sustains organisms in the aerobic environment but decomposition of organic materials in the hyporheic zone may deplete oxygen concentrations in return flows to the surface (Findlay et al., 1993; Tonina and Buffington, 2009). Alternatively, nutrient enrichment to surface waters occurs with hyporheic exchange by upwelling flows (Valett et al., 1990). Hyporheic flow is important for surface water/groundwater interactions that influence bull trout spawning sites and use of other habitats (e.g., juvenile rearing, migration) which are often associated with cold-water springs, glacial and snow melt, or groundwater upwelling (FWS, 2005).

The extent of the hyporheic zone adjacent to the Jim Creek system is unknown and it is likely to vary over time, depending on discharge and other properties of surface and groundwater flow (Tonina and Buffington, 2009). However, the action of pumping groundwater is expected to draw-down surface water in the Jim Creek system within some unknown distance from the trench and may affect hyporheic exchange to some extent locally with the NF Nooksack for the Project duration.

Pumps would continue removing groundwater while the trench is open but some water is expected to seep into the trench while open. Trench water would be pumped into a dewatering structure for controlled surface discharge and infiltration.

Water required for hydrostatic testing of the newly installed 30-inch pipeline would be obtained from the dewatering wells. Approximately 59,000 gallons or 1.8 acre feet of water would be required to test the proposed 30-inch pipeline in one test section. This water would be discharged to an energy-dissipating structure(s) and would occur to the surface for infiltration. Hydrostatic test water would be discharged at a rate to prevent scour, erosion and sediment migration to sensitive resources such as wetlands and waterbodies. The action of pumping groundwater or use in hydrostatic testing is expected to continue drawing-down surface water in the Jim Creek system after the pipeline is constructed which would also affect hyporheic exchange to in Jim Creek to some extent locally with the NF Nooksack for the Project duration.

Turbidity Effects. At high levels, turbidity directly affects growth of salmonids and other species and their survival by interfering with gill function and adversely affecting substrate for egg development (reviewed by Bash et al., 2001). Turbidity can also reduce macrophyte cover by limiting photosynthesis and can affect food resources as well as reduce cover from predators (Berger et al., 2004; Goldsborough and Kemp, 1988). Turbidity also adversely affects fish vision which is a requisite for social interactions (Berg and Northcote, 1985), feeding (Vogel and Beauchamp, 1999; Gregory and Northcote, 1993), and predator avoidance (Meager et al., 2006; Miner and Stein, 1996). Growth and survival (individual fitness) would be reduced if turbidity caused one or more these effects.

As discussed in the previous section, groundwater would be continuously pumped prior to and during trench construction with substantial volumes of groundwater removed from an unknown area surrounding the trench. Also discussed was the Fish Exclusion and Relocation Plan (see attachment C) which includes blocking water flow from entering Jim Creek from the NF Nooksack before groundwater wells and pumps are installed and operational. Jim Creek is expected to not have any water flow at the time of construction. The blocking action could adversely affect juvenile Chinook salmon presence in Jim Creek.

To remedy the affected flows in Jim Creek, Northwest would direct some pumped groundwater to flow into Jim Creek downstream from the edge of the construction right-of-way; the rest would be pumped into the NF Nooksack. Discharge of pumped groundwater into Jim Creek could mobilize sediment and generate turbidity. Estimates of discharge (cfs) in Jim Creek are provided in Table 5.2-3 by employing Manning's Formula (Limerinos, 1970; Arcement and Schneider 1989) to estimate Q, the stream discharge rate (cfs) at different depths of flow. Manning's Formula is:

$$Q = A\,(k/n)\,(R^{2/3})\,(S^{1/2})$$

Where **A** is the estimated cross-section area of the channel, **R** is the hydraulic radius (in feet, where **R** = A/P, and P is the wetted perimeter in feet), **S** is the slope of channel (vertical feet per horizontal feet), the constant ***k*** equals 1.486 if English units are used but *k* equals 1 with metric units, and **n** is Manning's roughness coefficient (Manning's n). The following assumptions were made to estimate flows in Jim Creek:

- the channel shape is trapezoidal for the entire length of Jim Creek downstream from the edge of the construction right-of-way,
- the bankfull stream depth is 5 feet and bankfull width is 15 feet with a constant stream bottom width of 5 feet and side banks sloped 1:1;
- the slope of the channel is 0.0025, and
- Manning's n is 0.1 (applicable for floodplain, medium brush to dense brush in summer; see Chow, 1959).

By varying stream depths with re-computation of the cross-sectional area (**A**), various discharge rates associated with stream depths were estimated in Table 5.2-3. Potential capabilities of pumps used to remove groundwater were discussed above for Oregon spotted frogs (Section 5.2.2.3). As an example of estimated effect, submersible pumps for wells 6-

inches in diameter or larger that are used in construction can pump from 30 to 400 gpm so that pumped water discharged into Jim Creek generates a flow of 26.26 cfs with depth of 3 feet. That intermediate discharge rate could be maintained by 29 pumps pumping 400 gpm. That discharge rate is 37 percent of the estimated bankfull discharge when water in Jim Creek is five feet deep. The numbers of pumps and pump capacities used in these estimates are possible given the Project design having potentially 114 wells, separated by 30 feet, drilled on each side of the trench.

Table 5.2-3
Estimates of Discharge (cfs) and Velocity (ft/s) in Jim Creek at Different Stream Depths and Pump Rates (gpm) Required to Sustain the Discharge or Velocity

Stream Depth (feet)	Stream Discharge (cfs)	Stream Velocity (ft/s)	Pump Rate (GPM)
5	70.65	1.41	31,709.96
4.5	57.27	1.34	25,705.59
4	45.46	1.26	20,403.67
3.5	35.14	1.18	15,773.81
3	26.26	1.09	11,785.59
2.5	18.74	1.00	8,409.00
2	12.51	0.89	5,615.22
1.5	7.53	0.77	3,378.44
1	3.74	0.62	1,680.25
0.5	1.16	0.42	522.84

In addition to discharge of pumped groundwater into Jim Creek, a portion of pumped water would be discharged into the NF Nooksack. Based on potential individual pump rates of 400 gpm, it seems reasonable that the amount of pumped groundwater discharged into Jim Creek would result in moderate instream flows, such as in the example above describing a discharge rate of 26.26 cfs. Water pumped into Jim Creek could generate some turbidity while flowing downstream through a dry channel but levels of turbidity are not expected to exceed usual levels that would occur with flows entering from the upper confluence with the NF Nooksack.

Newcombe and Jensen (1996) compiled research from many sources that demonstrate effects to anadromous and resident salmonids, including Chinook salmon, by various levels of suspended sediment and exposures over time. The developed models that approximate the level of effect are based on known levels of suspended sediment concentration and duration of exposure to that concentration in a stream. Output from each model provides severity-of-ill-effects (SEV) scores that are summarized below. SEV scores range from 0 to 14, where an SEV of 0 indicates no effects, an SEV between 1 and 3 indicates behavioral effects, an SEV from 4 to 8 indicates sublethal effects, and an SEV from 9 through 14 indicates lethal and paralethal effects (see Table 1 in Newcombe and Jensen, 1996).

SEVs modeled for a range of TSS concentrations and exposure durations are shown in Figure 5.2-4. Lethal effects are expected at a concentration of 10,000 mg/l and percent mortality would increase with increasing durations of exposure. A concentration of 1,000 mg/l would be sublethal (SEV = 8) until exposures approach 48 hours. Lower concentrations would lead to less

severe effects to juvenile or adult salmonids but could include behavioral and physiological effects.

Based on the severity of effects model, juvenile and/or adult salmonids in Jim Creek downstream from the pumped water release site might be exposed to more than 10 mg/l but less than 100 mg/l of suspended solids during initial flows but no additional turbidity pulse would be expected with continued pumping of groundwater. An initial pulse of suspended solids with concentration of 10 to 100 mg/l would likely last for less than one hour at any location in the Jim Creek channel (to flow a distance of 3,200 feet at a depth of 3 feet, with discharge of 26.26 cfs, and velocity of 1.1 feet per second, for example); the severity of effects would be well below a SEV score of 8 (sub-lethal), more in the range of 2 to 6 with effects to behavior, probably avoidance.

From this analysis, it appears reasonable that the amount of pumped groundwater discharged into Jim Creek would result in moderate instream flows, certainly less than estimated bankfull flows. Water pumped into Jim Creek could generate some turbidity while flowing downstream through a dry channel but levels of turbidity are not expected to exceed usual levels that would occur with flows entering from the upper confluence with the NF Nooksack.

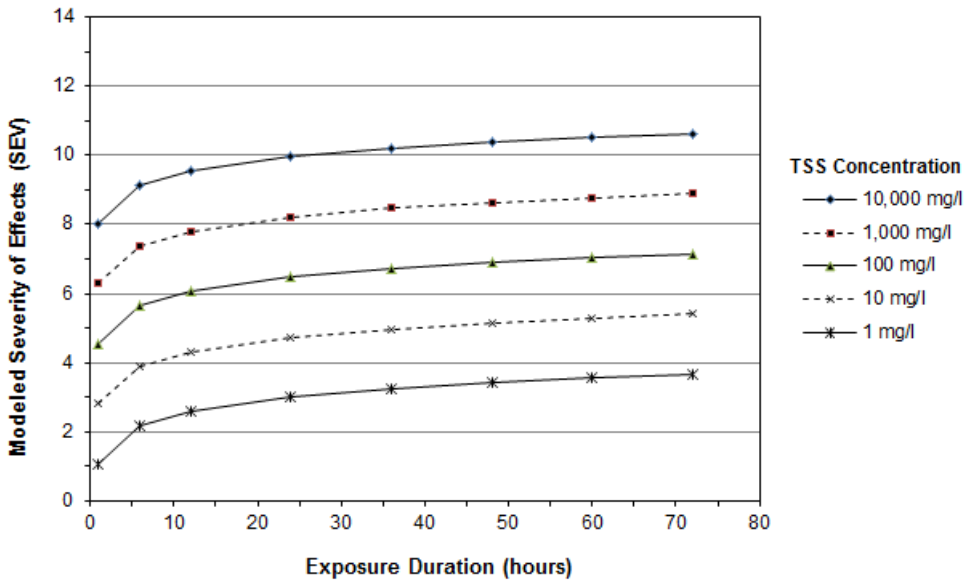

Figure 5.2-4
Severity of Effects (SEV) for Salmonids Applying the Newcombe and Jensen (1996) Model 1 for Different Total Suspended Solid (TSS) Concentrations and Exposure Durations Ranging from 1 hour to 72 hours

Northwest's Environmental Inspector (EI) would visually monitor the groundwater, hydrostatic test water and trench dewatering activities to ensure that no erosion occurs or sedimentation enters waterbodies and would ensure that turbid water is not discharged to Waters of the State. If the EI determines that a discharge is entering a waterbody, the receiving water would be visually monitored for turbidity. If turbidity is observed, the dewatering operations would be immediately adjusted/reinstalled/repaired to ensure that the discharge to surface water is halted until water quality standards are met as would be required by WDOE's Section 401

Water Quality Certification and General Construction Stormwater Permit, which Northwest must obtain prior to construction.

Accidental Releases. Aquatic habitats in the Project area could be adversely affected if petroleum products were accidentally discharged into groundwater and/or surface waters. Such materials are toxic to algae, invertebrates and fish. During 96-hour tests of acute toxicity, the LC50 for juvenile coho salmon exposed to diesel fuel ranged between 2,186 and 3,017 mg/L (World Health Organization, 1996). Water accommodated fractions (standardized preparation of water systems with dissolved oil components for toxicity studies) prepared from oils higher in aromatics (e.g., the middle distillates, including Fuel Oil No. 2, kerosene and diesel) are generally more toxic than those prepared from crude oils and gasoline (e.g., Anderson et al., 1974; Rice et al., 1976; Markarian et al., 1994). Consequently, LC50's for crude oil would most likely be higher and less toxic than those values, above, for diesel fuel. Generally, diesel fuels and lubricating oils are considerably more toxic to aquatic organisms than other, more volatile products (gasoline) on the one hand, or heavier crude oils on the other (Markarian et al., 1994). Impacts to aquatic habitats that primarily affect aquatic substrates – hence fish spawning, incubating and rearing habitats – can remain for much longer periods (Markarian et al., 1994).

Potential effects of hydraulic fluids on aquatic organisms were addressed above. In general, toxicity of organophosphate esters is greater than either mineral oil or polyalphaolefin-based hydraulic fluids for inhalation, oral and dermal for humans but toxicities have not been clearly described for aquatic invertebrates, fish or amphibians and would be dependent on specific chemical components (U.S. Department of Health and Human Services, 1997).

According to our Procedures (Section IV.A.1.d and e) and the ECRP (see attachment A), 1) no equipment would be parked overnight or fueled within 100 feet from a wetland or waterbody boundary, and 2) no hazardous materials, including chemicals, fuels, and lubricating oils, would be stored within 100 feet of a wetland, waterbody, or designated municipal watershed area, unless the location is designated for such use by an appropriate governmental authority. Adhering to these procedures would minimize any risk of accidental discharge of hazardous compounds, including petroleum products, into waterbodies and associated wetlands.

Water Temperature Effects. Water temperature can be affected by removal of riparian forested vegetation. Increased water temperatures can affect survival of fry and juvenile salmon due to direct lethality, increased susceptibility to sediment toxicity (Richter and Kolmes, 2005), and to infectious disease and parasite loads (McCullough, 1999) although susceptibility to temperatures changes may depend on water temperatures to which juveniles have been acclimated (McCullough, 1999). Recommended temperatures for spawning Chinook salmon range from 5.6° to 13.9°C (42°F to 57°F). The upper lethal limit for Chinook salmon is 25.1°C (77°F) (Beauchamp et al., 1983).

WDOE (2017) reported water temperatures measured in the Nooksack River mainstem at North Cedarville at water quality monitoring station 01A120, approximately four miles west of Deming, from 2001 through 2010. Seasonal maximum water temperatures measured between June/July through September indicate temperatures exceeding 60°F during July and August and exceeding 65°F most years during those months. Summer water temperatures in Jim Creek would likely be higher than in the Nooksack River mainstem due to prevalence of shallow water with limited flow.

Shade trees would be removed within the riparian zone of Jim Creek with some potential to increase water temperatures. Areas of surface water exposed to increased solar loading would depend on heights of trees that would be removed and their shadows. The effect, if measurable, would be greatest when the sun's altitude from the horizon is highest, which is on the summer solstice. Shadow lengths and shading would increase before and after the summer solstice and daily, before and after noon. The greatest potential for water temperature increases due to riparian tree removal would coincide with the period of maximum water temperatures expected in Jim Creek which has the possibility of limiting or preventing the presence of anadromous salmonids locally in the Project area during summer. However, there is no evidence that increased water temperatures result from clearing small amounts of riparian vegetation during pipeline construction. For example, water temperatures measured at four coldwater streams in New York before and during pipeline construction and through 3 years following construction showed no short-term or long-term effect on water quality parameters, including water temperature, even though such effects were expected because streambank vegetation had to be cleared with reduced shading (Blais and Simpson, 1997). Likewise, pipeline construction across two coldwater, fish-bearing streams in Alberta required removing forested riparian vegetation. Water temperatures at construction sites and downstream did not increase above temperatures upstream from the construction site (Brown et al., 2002).

The Project would not remove trees that cast shadows on water surfaces of the NF Nooksack; no effects to temperature in the NF Nooksack are expected from construction or operation of the Project.

Herbicides. Herbicides have the potential to cause toxic effects to different salmonid life stages and to other aquatic species, causing direct impacts, if used improperly. When herbicides are properly used according to label restrictions and BMPs to control noxious weeds, there is little to no chance of causing injury or mortality to fish or other aquatic organisms.

No herbicides would be used to control vegetation (i.e., brush and trees) on the permanent easement unless approved or required by the landowner (see discussion above in Section 5.2.2.3). Vegetation would be periodically maintained using mowing, cutting, trimming and herbicides (selectively). Selective use of herbicides could be used to control noxious weed infestations along the construction right-of-way and permanent easement. All use of herbicides would be in accordance with state and local regulations and landowner approval, and would be consistent with our Plan and Procedures. Considering the potential for limited use of herbicides within the Project area and precautions that would be in place to prevent entry into waters, meaningful negative effects to Chinook salmon from herbicides would be unlikely to occur (e.g., Tu et al, 2001; WSDOT, 2011b).

Interrelated and Interdependent Effects. No interrelated or interdependent actions are associated with the Project.

Cumulative Effects. FWS and NMFS describe cumulative effects (50 CFR 402.02) as the result of future actions by state or private entities, not involving federal actions, but reasonably certain to occur in the Action Area considered in this BA. Future federal actions that are unrelated to the Project are not considered here because they require separate consultation pursuant to Section 7 of the ESA. There are no actions by state or private entities known or

reasonably certain to occur within the Aquatic Action Area that would cumulatively affect Chinook salmon.

Critical Habitat. There is no designated critical habitat in Jim Creek that would be affected by the Project. Critical habitat has been designated in the NF Nooksack. Some groundwater removed by pumps would likely be discharged into Jim Creek and an initial pulse of suspended sediments (discussed above) would likely enter the NF Nooksack downstream. Also, some pumped groundwater may be discharged directly into the NF Nooksack. Both actions would likely increase local quantities of water that could increase flows within critical habitat during periods when high flows generally occur in the NF Nooksack and MF Nooksack (June and July, see Figure 1.3-1). Additional flows would alter natural hydrography during that period but that, along with brief pulses of suspended sediment, is not expected to adversely affect any of the PCEs listed above for Chinook salmon critical habitat. Chinook salmon would not be spawning or using the NF Nooksack for incubation or larval development during that time.

The construction right-of-way occurs completely within Northwest's existing permanent easement that has been previously disturbed and maintained in an herbaceous condition but other vegetation types have encroached along the edges. The Project would require clearing 13.36 acres of native riparian vegetation (forest and wetlands) that would be removed during construction within riparian zones associated with designated critical habitat in the NF Nooksack. Removal of riparian vegetation may affect components of PCE 2 and PCE 3 that specify shade, submerged and overhang large wood that provide physical habitat conditions and support juvenile growth and cover to support juvenile and adult mobility and survival.

5.2.3.4 Conservation Measures

Northwest would adhere to conditions in our Plan and Procedures that are specifically designed to avoid or minimize effects to waterbodies and fisheries habitats. In addition, Northwest has prepared a Project-specific ECRP that incorporates the provisions of the Plan and Proceedures (see attachment A). These documents provide BMPs that would avoid, minimize and restore project-related effects to fisheries resources and are not reiterated here.

In addition, Northwest proposes the following mitigation measures that minimize impact, restore affected habitats, provide habitat enhancement and provide compensatory measures for adverse effects to federally listed salmonids and critical habitats.

1. Discharge a portion of groundwater into Jim Creek to provide instream flows downstream from the Project area, potentially providing spawning habitat for steelhead at the downstream confluence with NF Nooksack.

2. Discharge a portion of groundwater into the NF Nooksack to compensate for decreased hyporheic exchange during construction.

3. Install LWD in Jim Creek and on banks to provide shade and habitat complexity. The installation, placement and configuration of LWD in Jim Creek is described in the *Jim Creek Restoration and Habitat Enhancement Plan* (Golder, 2017) (available upon request).

4. Replant riparian areas up to 25 feet either side of waterbodies according to our Procedures (see ECRP in attachment A).

5. Compensate for long-term wetland impacts to forested wetlands through the use of the Lummi Nation Mitigation Bank and/or by participating with the Nooksack Indian Tribe and Whatcom County to implement potential mitigation project(s) in the Project area, where appropriate and available.

6. Implement the Fish Exclusion and Relocation Plan (see attachment C) to salvage and relocate fish from aquatic habitats affected by groundwater removal.

7. Northwest offered the opportunity to provide the Nooksack Indian Tribe and Whatcom County some timber for their own purposes as an in-kind mitigation contribution.

8. The Nooksack Indian Tribe suggested that another form of mitigation (besides timber felling topic discussed above) would be to lower the "sill" at the inlet of Jim Creek to allow more fish passage.

9. All equipment would be washed offsite prior to entering the construction right-of-way to avoid introduction of noxious weeds or nuisance aquatic organisms. Equipment would be inspected for engine and hydraulic fluid leaks and confirmed to be "non-leaking" prior to entering a waterbody or working in the area.

10. Inadvertent spills of fluids used during construction, such as fuels and lubricants, could contaminate wetland soils and vegetation. To minimize the potential for spills and any impacts from such spills, Northwest's Spill Plan (attachment B) would be implemented. In general, hazardous materials, chemicals, fuels, lubricating oils and concrete-coating activities would be not be stored, nor would refueling operations be conducted within 100 feet of a wetland or waterbody in accordance with our Procedures and Northwest's Spill Plan.

11. Northwest's EI would visually monitor the groundwater, hydrostatic test water and trench dewatering activities to ensure that no erosion occurs or sedimentation enters waterbodies and would ensure that turbid water is not discharged to Waters of the State. If the EI determines that a discharge is entering a waterbody, the receiving water would be visually monitored for turbidity. If turbidity is observed, the dewatering operations would be immediately adjusted/reinstalled/repaired to ensure that the discharge to surface water is halted until water quality standards are met as would be required by WDOE's Section 401 Water Quality Certification and General Construction Stormwater Permit, which Northwest must obtain prior to construction.

12. After construction is complete, Northwest would disable the ELJs that were installed in 2015 by disconnecting metallic connections (removing all-thread rods, lag bolts, and chains) that are readily accessible from the surface by personnel working with hand tools. ELJ materials would become integrated in the Nooksack River Sub-basin by natural hydrologic forces over time.

5.2.3.5 Determination of Effects

Species. The Project **may affect** Puget Sound Chinook salmon because:

- Chinook salmon may be present in Jim Creek during Project implementation; and
- Chinook salmon would be present in NF Nooksack during Project implementation.

The Project **is likely to adversely affect** Puget Sound Chinook salmon for the following reasons:

- Juvenile Chinook salmon may be present within the Action Area as surface water levels decline during construction and groundwater pumping.
- Juvenile Chinook salmon may be salvaged from surface water in the Action Area with some risk of mortality or injury during capture and/or in storage containers or when released into alternative habitats.
- Mortality or injury of juvenile Chinook salmon from dewatering and/or fish salvage operations would affect a small portion of the population present within the Nooksack River Sub-basin.
- The Project would temporarily restrict movements of Chinook salmon in Jim Creek.
- The Project may temporarily alter hyporheic exchange with the NF Nooksack which could affect habitat suitability features that could include surface water temperatures, exchange of nutrients with groundwater, and amounts of habitats available in surface waters.

Critical Habitat. The Project **may affect** designated critical habitat for Chinook salmon within the Puget Sound ESU because:

- The Project is within the riparian zone of critical habitat associated with the NF Nooksack.

Project components are **likely to adversely affect** designated critical habitat for Chinook salmon within the Puget Sound ESU because:

- The Project would require clearing 13.36 acres of native riparian vegetation (forest and forested wetlands) during construction within riparian zones associated with designated critical habitat in the NF Nooksack. Removal of riparian vegetation may affect components of PCE 2 and PCE 3 that specify shade, submerged and overhang large wood that provide physical habitat conditions and support juvenile growth and cover to support juvenile and adult mobility and survival.
- Adverse effects to riparian zones would be long-term or permanent depending on the age of the riparian vegetation removed.

5.2.4 *Steelhead*

5.2.4.1 Species Account and Critical Habitat

Status. The DPS of Puget Sound steelhead was listed in 2007 as threatened in a final rule by NMFS (2007b). The listed DPS includes all naturally spawned anadromous steelhead populations originating below natural and manmade impassable barriers from rivers flowing into Puget Sound (NMFS, 2014c); hatchery origin fish are excluded from this listing. The five-year review by NMFS (2011a) identified that spawner and redd counts in the Puget Sound DPS were declining and therefore the DPS remained at a moderate risk of extinction.

Threats. NMFS published a status review in 2005 (NMFS, 2005c). In 2005, marked declines in sizes of runs for naturally produced steelhead were observed throughout the Puget Sound DPS, reflecting widespread reduced productivity (NMFS, 2005c), even while reduced harvests have been in place since the 1990s.

The principal factor contributing to decline of Puget Sound steelhead is the destruction, modification, or curtailment of habitat. Barriers to otherwise suitable habitat and adverse effects to water quantity and quality due to dams, loss of wetland and riparian habitats, coupled with urban and agricultural developments have caused loss and degradation of habitats (NMFS, 2007b). Steelhead harvests have been curtailed sufficiently, predation by marine mammals and birds are likely localized effects, and diseases are of unknown effect. Continued threats by habitat loss and degradation to nearshore, estuarine and lowland habitats required additional regulation and protection (NMFS, 2007b).

Species Recovery. No recovery plan has been finalized for the Puget Sound steelhead DPS. Steelhead were not specifically included in the recovery plan for Puget Sound Salmon that was developed by the Shared Strategy for Puget Sound Development Committee and adopted by NMFS in 2007. NMFS (2006) noted that the geographic area encompassed by the Shared Strategy Plan included the entire range of the Puget Sound steelhead DPS, but the DPS had not been listed as threatened at the time of Plan's publication.

Life History, Habitat Requirements and Distribution. Steellhead are anadromous rainbow trout that utilize coastal streams and tributaries to the Columbia River. Winter-run steelhead migrate to natal streams in late fall and winter while summer-run steelhead migrate upstream during spring and summer. Winter-run steelhead are at various stages of maturity during upstream migration and spawn within a few months of entering freshwater. Alternatively summer-run steelhead are immature and require instream maturation prior to spawning in the spring following entry to natal streams (Pauley et al., 1986).

Steelhead require cool, clear, well-oxygenated streams for spawning with suitable gravels and water flows (Pauley et al., 1986). Females select and excavate redd sites in spawing gravel to depths of 7 to 30 cm. Substrate gravels ranging for 1.3 to 11.4 cm diameter with aerated water flowing at 76 cm/second appear to be suitable for spawning. Some steelhead are iteroparous – they have several reproductive cycles over their lifetimes unlike semelparous salmon that die after reproducing once (NMFS, 1998). Repeat spawners are generally female but incidence of repeat spawning decreases from south to north along the Pacific Coast (Pauley et al., 1986).

Preferred water temperatures during steelhead spawning range between 3.9°C and 9.4°C (39°F to 49°F) (Pauley et al., 1986). Incubation temperatures for salmonid embryos, in general range from 4.0°C and 14°C (39°F to 57°F) and preferred rearing temperatures for steelhead are 7.2°C and 14.5°C (45°F to 58°F) with an optimum temperature of 10.0°C (50°F) and upper lethal temperature of 23.9°C (75°F) (Pauley et al., 1986). Along with water temperatures, dissolved oxygen concentrations are critical steelhead development and survival and dissolved oxygen physiological requirements increase directly with increasing water temperature. Generally, low dissolved oxygen affects metabolic rates, swimming speed, growth rates, food consumption rates, efficiency of food utilization, behavior and survival of all salmonids including steelhead (Pauley et al., 1986).

Alevins hatch in four to seven weeks and, after adsorbing their yolk sac, they are free swimming in three to seven days after hatching. Juvenile fry gradually move into deeper portions of streams and, similar to juvenile coho, are territorial. They primarily feed on benthic invertebrates including isopods, amphipods and insects (Pauley et al., 1986). Noted by numerous investigators is the importance of streamside vegetation and submerged cover (rocks, large wood) that provides food, temperature stability and protection from predators (Pauley et al., 1986). Juvenile steelhead remain in freshwater from 1 to 4 years before downstream migration and smoltification in estuarine and marine environments. They remain in marine water for 2 to 3 years before returning to spawn in their natal stream. Some fish are sexually mature ("ocean maturing") at the time they enter freshwater to spawn but others ("stream maturing") enter freshwater as sexually immature fish and require several months in freshwater for gonads to fully develop and to spawn. These two types are related to the winter-run ("ocean maturing") and summer-run ("stream maturing") steelhead stock (NMFS, 1998), as referenced above.

Population Status. Two races of steelhead return to the Nooksack Sub-basin, including the NF Nooksack: summer-run and winter-run. Winter-run steelhead enter the Nooksack River system in the fall and winter, and then spawn within the next few months. Winter-run steelhead spawning and juvenile rearing occur in the Nooksack River and all three forks (WDFW, 2016b; StreamNet, 2012). Summer-run steelhead enter the Nooksack River during the spring and summer as immature fish, mature and then spawn the following spring in higher reaches of river. Summer steelhead migrate through the Project area to reach holding/spawning areas further upstream from the Project (WDFW, 2016c; WDFW, 2016d; StreamNet, 2012). Figure 5.2-5 provides approximate timing for life history stages for both the winter-run and summer-run steelhead populations.

Summer Steelhead												
Life Stage/Activity	**Jan**	**Feb**	**Mar**	**Apr**	**May**	**Jun**	**Jul**	**Aug**	**Sep**	**Oct**	**Nov**	**Dec**
Upstream Adult Migration												
Adult Spawning												
Intragravel Development												
Juvenile Rearing												
Juvenile Out-Migration												
Winter Steelhead												
Life Stage/Activity	**Jan**	**Feb**	**Mar**	**Apr**	**May**	**Jun**	**Jul**	**Aug**	**Sep**	**Oct**	**Nov**	**Dec**
Upstream Adult Migration												
Adult Spawning												
Intragravel Development												
Juvenile Rearing												
Juvenile Out-Migration												
Source: WRIA1 Salmon Recovery Board, 2005; Williams et al., 1975												

Figure 5.2-5
Approximate Timing of Winter-run and Summer-run Steelhead Use in the Nooksack Sub-basin

Suspended, glacial sediment makes it difficult to monitor steelhead spawners and redds in the Nooksack River system. Recent aerial and ground surveys that have been conducted during clear water conditions suggests that natural spawner winter-run steelhead in the Nooksack River are relatively stable, with an average escapement of 1,806 adult spawners from 2010 through 2013 (WDFW, 2014).

The winter-run steelhead population in the Nooksack Sub-basin is augmented by hatchery stock, including approximately 150,000 releases of juvenile fish from Kendall Creek Hatchery in April and May to provide sustainable recreational and tribal fisheries (NMFS, 2016a). Hatchery origin fish are not included in the ESA listing for the Puget Sound DPS and therefore are not designed to augment the abundance of natural spawners and do not contribute to the population viability or recovery of listed steelhead (NMFS, 2016a). Average hatchery-spawner escapement from 2001 to 2013 is 133 spawners (WDFW, 2014).

Analysis of mapped distributions of winter-run and summer-run steelhead (StreamNet, 2012) reveals that more stream miles in the Nooksack Sub-basin (HUC 17110004) support life functions (migration, rearing, spawning) by winter-run steelhead (309 stream miles) than by summer-run steelhead (203 stream miles). A similar distinction occurs in the Nooksack River-Frontal Bellingham Bay 5th Field watershed that includes the Project area. Winter-run steelhead utilize more stream miles for life functions (migration, rearing, spawning) than summer-run steelhead which appear to only migrate through the watershed (see Table 5.2-4).

Table 5.2-4
The Extent of Habitats (stream miles) Utilized by Winter-run and Summer-Run Steelhead in the Nooksack River-Frontal Bellingham Bay 5th Field Watershed

Habitat Function	Miles of Stream Habitat	
	Winter-Run Steelhead	Summer-Run Steelhead
Migration Only	55.06	57.55
Rearing and Migration	10.53	0.00
Spawning and Rearing	78.86	0.00
Total	**144.45**	**57.55**
Source: StreamNet, 2012		

Critical Habitat. Critical habitat has been designated for Puget Sound steelhead, including the NF Nooksack (NMFS, 2016b) and includes PCEs that support one or more life stages (i.e., freshwater sites for spawning, rearing, migration and freshwater/saltwater foraging), as well as provides biological features essential for the conservation of steelhead (NMFS, 2013). Critical habitat has not been designated in Jim Creek. Within the Project area, critical habitat has been designated for freshwater spawning sites that provide water and substrate to support spawning, incubation and larval development for steelhead (NMFS, 2013 and 2016c). PCEs associated with designated critical habitat include the following physical or biological features in freshwater habitats (NMFS, 2016d):

- Freshwater spawning sites with water quantity and quality conditions and substrate supporting spawning, incubation and larval development.
- Freshwater rearing sites with water quantity and floodplain connectivity to form and maintain physical habitat conditions and support juvenile growth and mobility; water quality and forage supporting juvenile development; and natural cover such as shade, submerged and overhanging large wood, log jams and beaver dams, aquatic vegetation, large rocks and boulders, side channels, and undercut banks.
- Freshwater migration corridors free of obstruction with water quantity and quality conditions and natural cover such as submerged and overhanging large wood, aquatic vegetation, large rocks and boulders, side channels, and undercut banks supporting juvenile and adult mobility and survival.

PCEs for steelhead within estuarine habitats, nearshore marine areas, and offshore marine areas were also identified but are not included here since none of those habitats occur within the Project area (NMFS, 2016d).

5.2.4.2 Environmental Baseline

Species Presence. WDFW's SalmonScape (WDFW, 2016d) shows that winter steelhead spawn in the NF Nooksack in the immediate vicinity of the Project area as well as upstream and downstream. Winter steelhead are also present in Jim Creek but specific life history habitat was not identified. However, Jim Creek provides quiet channel habitat that may be utilized for winter steelhead juvenile rearing, January through December, discussed by Smith (2002) although not documented by WDFW. Steelhead may spawn in Jim Creek, near its lower

confluence with the NF Nooksack (Ingram, 2017). Summer steelhead are present in the NF Nooksack but apparently not in Jim Creek.

Winter-run steelhead enter the Nooksack River system in the fall and winter and then spawn within the next few months. Winter-run steelhead spawning and juvenile rearing occur in the Nooksack River and all three forks (WDFW, 2016b; StreamNet, 2012). Summer-run steelhead enter the Nooksack River during the spring and summer as immature fish, mature and then spawn the following spring in higher reaches of river. Summer steelhead migrate through the Project area to reach holding/spawning areas further upstream from the Project (WDFW, 2016b; StreamNet, 2012).

Habitat. The lower NF Nooksack has recently been assessed by the Nooksack Tribe Natural Resources Department within 14 reaches, including a 1.6-mile reach (RM 36.7 to RM 38.3) that incorporates the proposed Project (see Hyatt, 2007). This reach of the NF is the most actively shifting section of the River, creating a wide and heavily braided channel with extensive islands and back channel complexes. The channel has increased in width from 230 meters (755 feet) in 1938 to 440 meters (1,444 feet) in 2005. Wetted habitat in the area is evenly split among riffle, glide and slough habitat, providing productive habitats for salmon and other native resident fish. This area of the NF Nooksack also has the largest area of isolated pools that are connected at high flow, but are disconnected from the NF Nooksack mainstem at low flows. The NF Nooksack floodplain is about 65 percent of historic channel migration zone forest cover, close to restoration goals of 70 percent (Nooksack Indian Tribe, 2016), although only 1.3 percent of the floodplain has enough mature timber that can contribute to LWD loading (Hyatt, 2007) and consequently, there is little recruitment of LWD.

Critical Habitat. Critical habitat for steelhead in the Puget Sound steelhead DPS has been designated within the NF Nooksack in the vicinity of the Project. Critical habitat has not been designated in Jim Creek.

5.2.4.3 Environmental Effects

Direct and Indirect Effects

Construction of the Project could directly and/or indirectly affect steelhead present in the Action Area through one or more of the following pathways:

- Interference with key life history functions for native species.
- Mortality and/or injury of fish from stranding in surface waters drawn down during pumping groundwater and during fish salvage.
- Disruption of hyporheic exchange with the NF Nooksack.
- Turbidity generated during water discharged into Jim Creek and NF Nooksack from pumped groundwater.
- Removal of riparian vegetation could reduce shade, which could increase water temperatures in Jim Creek.

- Accidental release of fuels and entry of other petroleum products into surface waters could adversely affect all fish species and other aquatic organisms.
- Application of herbicides to control noxious weeds near waterbodies.

Interference with Life History Functions. WDFW indicated (during an interagency Project meeting held in February 2017) that the standard in-water work windows which are typically applied to HPA permits would not be applied to this atypical Project. WDFW stated that the standard recommended in-water work period for the Project area is typically a three-week period between late-July and mid-August. However, the U.S. Army Corps of Engineers lists June 15 to July 31 for the in-water work period for the Project area. There is considerable variation of life phase timing between anadromous fish species but generally, construction of the Project (June through September) would coincide with upstream migration and juvenile rearing for winter and summer steelhead (see Figure 5.2-5). Adult spawning and embryonic intragravel development in the NF Nooksack by winter steelhead may occur in the vicinity of the Project at some time during construction. The primary habitat functions of Jim Creek for winter and summer steelhead are assumed to be for use during upstream migration, juvenile rearing and juvenile out-migration. Block-screening placed across Jim Creek downstream of the construction right-of-way and damming the upper Jim Creek connection with NF Nooksack prior to initiating construction (see Fish Exclusion and Relocation Plan in attachment C) would eliminate its use by steelhead during the construction period, June through September.

Mortality and/or Injury of Fish by Stranding and During Salvage. The dewatering program would include the use of well points, drilled on either side of the new 30-inch trench alignment. A typical system may include wells installed on 30-foot centers, extending 15 feet below the bottom of the trench; containing a filter casing surrounded by filter media (pea rock). A pump would be installed in each casing with a discharge riser connected at the surface to a header pipe that connects all of the well points together. The common header pipe discharge would be directed into additional piping and/or hoses that would be routed to the west of the Project area to allow groundwater discharge directly into Jim Creek or the NF Nooksack. The piping and hoses would be appropriately sized for the volume of water to be discharged. It should be understood that site-specific conditions at the time of construction would dictate the dewatering system configuration including well location/depth/number, pump performance requirements, header sizing and discharge pipeline configuration. The Jim Creek system has not been precisely defined but is known to include several channels and ponds that are likely to be interconnected by groundwater, much or all of which may have hyporheic connection with the NF Nooksack.

It is not possible to estimate numbers of anadromous species in the Jim Creek system that may be stranded between blocknets and cofferdams installed immediately prior to groundwater removal and that may be salvaged (see attachment C) during construction. StreamNet (2012) has mapped Jim Creek as chum and coho salmon migration habitat, extending for a length of 1.02 stream miles upstream from the lower confluence with the NF Nooksack. It is assumed that Jim Creek may be utilized during migration by winter steelhead and may potentially be used as quiet off-channel habitat for juvenile rearing by various species (discussed by Smith, 2002) including winter steelhead, even though not documented.

StreamNet (2012) provides maps of streams occupied by species utilizing various stream lengths as functional habitat: 1) migration only, 2) rearing and migration, and 3) spawning and rearing. Table 5.2-5 provides the total linear distances, in stream miles, of those habitats for winter steelhead within the Nooksack Sub-basin (HUC 17110004). Table 5.2-5 also shows the relative importance of Jim Creek, if it was used for the specific functional habitat. The relative importance of Jim Creek as specified habitat and total habitat for winter steelhead is small in comparison with the Nooksack Sub-basin (HUC 17110004). This analysis suggests that numbers of winter steelhead potentially stranded during the dewatering process would be a small fraction of numbers expected within the remaining Nooksack Sub-basin during the time of construction. For winter steelhead, use of Jim Creek during construction would coincide with all life functions including adult up-stream migration, adult spawning, intragravel development, juvenile rearing and juvenile out-migration (see Figure 5.2-5).

Table 5.2-5
The Extent (stream miles) of Winter Steelhead Migration, Spawning, and/or Rearing Habitats in the Nooksack Sub-basin (HUC 17110004) in Comparison to Assumed Extent of Habitats in Jim Creek [1]

Winter Steelhead Habitat Use	Extent of Habitats	
	Nooksack Sub-basin (Stream miles)	Total Habitat Assumed in Jim Creek [1]
Migration Only	102.79	0.99%
Rearing and Migration	11.74	8.69%
Spawning and Rearing	194.16	0.53%
Total Mapped Habitat	308.70	0.33%

Source: StreamNet, 2012.
Notes:
[1] StreamNet has mapped 1.02 miles of coho migration-only habitat which is assumed to be potential migration and/or rearing habitat for other anadromous species.

A Fish Exclusion and Relocation Plan (see attachment C) has been proposed to collect anadromous salmonids and other fish and aquatic species from surface waters in the Jim Creek system as water is drawn down. Fish salvaged under the plan would be relocated to unaffected water, potentially Jim Creek downstream from the Project area and/or the NF Nooksack. Seining would be the primary method utilized for fish salvage rather than electrofishing as discussed above for Chinook salmon. Also, some portion of fish salvaged may expire or not survive relocation into habitats different from those from which they were salvaged. A variety of physiological stress responses to extreme capture and holding conditions have been related to exhaustive exercise, which can adversely affect survival once fish are released (Gallaugher and Farrel, 1999).

Disruption of Hyporheic Exchange. As discussed above for Chinook salmon, the extent of the hyporheic zone adjacent to the Jim Creek system is unknown and it is likely to vary over time, depending on discharge and other properties of surface and groundwater flow (Tonina and Buffington, 2009). However, the action of pumping groundwater is expected to draw-down surface water in the Jim Creek system within some unknown distance from the trench and may affect hyporheic exchange to some extent locally with the NF Nooksack for the Project duration.

Pumps would continue removing groundwater while the trench is open but some water is expected to seep into the trench while open. Trench water would be pumped into a dewatering structure for controlled surface discharge and infiltration. The pumped well point water would be cold, clear groundwater that may be discharged directly or indirectly into the Jim Creek system or to the NF Nooksack. Water would be discharged at a rate to prevent scour, erosion and sedimentation. Water required for hydrostatic testing of the newly installed 30-inch pipeline would be obtained from the dewatering wells and would be discharged to the surface for infiltration. Hydrostatic test water would be discharged at a rate to prevent scour, erosion and sediment migration to sensitive resources such as wetlands and waterbodies.

Turbidity Effects. At high levels, turbidity directly affects growth of salmonids and other species and their survival by interfering with gill function and adversely affecting substrate for egg development (reviewed by Bash et al., 2001) as discussed above for Chinook salmon.

As discussed in the previous section, groundwater would be continuously pumped prior to and during trench construction with substantial volumes of groundwater removed from an unknown area surrounding the trench. Also discussed was the Fish Exclusion and Relocation Plan (see attachment C) which includes blocking water flow from entering Jim Creek from the NF Nooksack before groundwater wells and pumps are installed and operational. Jim Creek is expected to not have any water flow at the time of construction. The blocking action could adversely affect juvenile steelhead presence in Jim Creek and potential steelhead spawning in lower Jim Creek at the confluence with NF Nooksack.

To remedy the affected flows in Jim Creek, Northwest would direct some pumped groundwater to flow into Jim Creek downstream from the edge of the construction right-of-way; the rest would be pumped into the NF Nooksack. Discharge of pumped groundwater into Jim Creek could mobilize sediment and generate turbidity. Estimates of discharge (cfs) in Jim Creek are provided in Table 5.2-4 and discussed above for Chinook salmon.

In addition to discharge of pumped groundwater into Jim Creek, a portion of pumped water would be discharged into the NF Nooksack. Based on potential individual pump rates of 400 gpm, it seems reasonable that the amount of pumped groundwater discharged into Jim Creek would result in moderate instream flows, such as in the example under Chinook salmon. Water pumped into Jim Creek could generate some turbidity while flowing downstream through a dry channel but levels of turbidity are not expected to exceed usual levels that would occur with flows entering from the upper confluence with the NF Nooksack.

Newcombe and Jensen (1996) compiled research from many sources that demonstrate effects to anadromous and resident salmonids, including steelhead, by various levels of suspended sediment and exposures over time. The modeling process was briefly described for Chinook salmon but also would apply to steelhead. Based on the severity of effects model, juvenile and/or adult salmonids in Jim Creek downstream from the pumped water release site might be exposed to more than 10 mg/l but less than 100 mg/l of suspended solids during initial flows but no additional turbidity pulse would be expected with continued pumping of groundwater. An initial pulse of suspended solids with concentration of 10 to 100 mg/l would likely last for less than one hour at any location in the Jim Creek channel (to flow a distance of 3,200 feet at a depth of 3 feet, with discharge of 26.26 cfs, and velocity of 1.1 feet per second, for example); the severity of effects would be well below a SEV score of 8 (sub-lethal), more in the range of 2 to 6 with effects to behavior, probably avoidance.

From this analysis, it appears reasonable that the amount of pumped groundwater discharged into Jim Creek would result in moderate instream flows, certainly less than estimated bankfull flows. Water pumped into Jim Creek could generate some turbidity while flowing downstream through a dry channel but levels of turbidity are not expected to exceed usual levels that would occur with flows entering from the upper confluence with the NF Nooksack.

Northwest's EI would visually monitor the groundwater, hydrostatic test water and trench dewatering activities to ensure that no erosion occurs or sedimentation enters waterbodies and

would ensure that turbid water is not discharged to Waters of the State. If the EI determines that a discharge is entering a waterbody, the receiving water would be visually monitored for turbidity. If turbidity is observed, the dewatering operations would be immediately adjusted/reinstalled/repaired to ensure that the discharge to surface water is halted until water quality standards are met as would be required by WDOE's Section 401 Water Quality Certification and General Construction Stormwater Permit, which Northwest must obtain prior to construction.

Accidental Releases. Aquatic habitats in the Project area could be adversely affected if petroleum products were accidentally discharged into groundwater and/or surface waters. Such materials are toxic to algae, invertebrates and fish, discussed above for Chinook salmon.

According to our Procedures (Section IV.A.1.d and e) and the ECRP (see attachment A), 1) no equipment would be parked overnight or fueled within 100 feet from a waterbody or wetlands boundary, and 2) no hazardous materials, including chemicals, fuels, and lubricating oils, would be stored within 100 feet of a wetland, waterbody, or designated municipal watershed area, unless the location is designated for such use by an appropriate governmental authority. Adhering to these procedures would minimize any risk of accidental discharge of hazardous compounds, including petroleum products, into waterbodies and associated wetlands potentially utilized by steelhead.

Water Temperature Effects. As discussed above for Chinook salmon, water temperature can be affected by removal of riparian forested vegetation. Increased water temperatures can affect survival of fry and juvenile salmon due to direct lethality, increased susceptibility to sediment toxicity (Richter and Kolmes, 2005), and to infectious disease and parasite loads (McCullough, 1999) although susceptibility to temperatures changes may depend on water temperatures to which juveniles have been acclimated (McCullough, 1999). Preferred water temperatures during steelhead spawning range between 3.9^{o}C and 9.4^{o}C (39°F to 49°F) (Pauley et al., 1986). Preferred rearing temperatures for steelhead are 7.2^{o}C and 14.5^{o}C (45°F to 58°F) with an optimum temperature of 10.0^{o}C (50°F) and upper lethal temperature of 23.9^{o}C (75°F) (Pauley et al., 1986). WDOE (2017) reported seasonal maximum water temperatures measured between June/July through September indicating temperatures exceeding 60°F during July and August and exceeding 65°F most years during those months. Summer water temperatures in Jim Creek would likely be higher than in the Nooksack River mainstem due to prevalence of shallow water with limited flow.

Shade trees would be removed within the riparian zone of Jim Creek with some potential to increase water temperatures. Areas of surface water exposed to increased solar loading would depend on heights of trees that would be removed and their shadows. The effect, if measurable, would be greatest when the sun's altitude from the horizon is highest, which is on the summer solstice. Available information discussed for Chinook salmon indicates that the small amounts of increased solar loading on water surfaces caused by pipeline construction do not measurably increase water temperatures.

The Project would not remove trees that cast shadows on water surfaces of the NF Nooksack; no effects to temperature in the NF Nooksack are expected from construction or operation of the Project.

Herbicides. Herbicides have the potential to cause toxic effects to different salmonid life stages and to other aquatic species, causing direct impacts, if used improperly. When herbicides are properly used according to label restrictions and BMPs to control noxious weeds, there is little to no chance of causing injury or mortality to fish or other aquatic organisms.

No herbicides would be used to control vegetation (i.e., brush and trees) on the permanent easement unless approved or required by the landowner. Vegetation would be periodically maintained using mowing, cutting, trimming and herbicides (selectively). Selective use of herbicides could be used to control noxious weed infestations along the permanent easement. All use of herbicides would be in accordance with state and local regulations and landowner approval, and would be consistent with our Plan and Procedures. Considering the potential for limited use of herbicides within the Project area and precautions that would be in place to prevent entry into waters, meaningful negative effects to steelhead from herbicides would be unlikely to occur (e.g., Tu et al, 2001; WSDOT, 2011b).

Interrelated and Interdependent Effects. No interrelated or interdependent actions are associated with the Project.

Cumulative Effects. FWS and NMFS describe cumulative effects (50 CFR 402.02) as the result of future actions by state or private entities, not involving federal actions, but reasonably certain to occur in the Action Area considered in this BA. Future federal actions that are unrelated to the Project are not considered here because they require separate consultation pursuant to Section 7 of the ESA. There are no actions by state or private entities known or reasonably certain to occur within the Aquatic Action Area that would cumulatively affect Chinook salmon.

Critical Habitat. There is no designated critical habitat in Jim Creek that would be affected by the Project. Critical habitat for steelhead has been designated in the NF Nooksack. Some groundwater removed by pumps would likely be discharged into Jim Creek and an initial pulse of suspended sediments (discussed above) would likely enter the NF Nooksack downstream. Also, some pumped groundwater may be discharged directly into the NF Nooksack. Both actions would likely increase local quantities of water that could increase flows within critical habitat during periods when high flows generally occur in the NF Nooksack and MF Nooksack (June and July, see Figure 1.3-1 in Section 1.3, above). Additional flows would alter natural hydrography during that period but that, along with brief pulses of suspended sediment, is not expected to adversely affect any of the PCEs listed above for steelhead critical habitat.

The construction right-of-way occurs completely within Northwest's existing permanent easement that has been previously disturbed and maintained in an herbaceous condition but other vegetation types have encroached along the edges. However, the Project would require clearing of 13.36 acres of native riparian vegetation (forest and wetlands) that would be removed during construction within riparian zones associated with designated critical habitat in the NF Nooksack. Removal of riparian vegetation may affect components of the PCEs that specify shade, submerged and overhanging large wood that provide physical habitat conditions and support juvenile growth and cover to support juvenile and adult mobility and survival.

5.2.4.4 Conservation Measures

Northwest would adhere to conditions in our Plan and Procedures that are specifically designed to avoid or minimize effects to waterbodies and fisheries habitats. In addition, Northwest has prepared a Project-specific ECRP (see attachment A). These documents provide BMPs that would avoid, minimize and restore project-related effects to fisheries resources and are not reiterated here.

In addition, Northwest proposes the following mitigation measures that minimize impact, restore affected habitats, provide habitat enhancement and provide compensatory measures for adverse effects to federally listed salmonids and critical habitats.

1. Discharge a portion of groundwater into Jim Creek to provide instream flows downstream from the Project area, potentially providing spawning habitat for steelhead at the downstream confluence with NF Nooksack.

2. Discharge a portion of groundwater into the NF Nooksack to compensate for decreased hyporheic exchange during construction.

3. Install LWD in Jim Creek and on banks to provide shade and habitat complexity. The installation, placement and configuration of LWD in Jim Creek is described in the *Jim Creek Restoration and Habitat Enhancement Plan* (Golder, 2017) (available upon request).

4. Replant riparian areas up to 25 feet either side of waterbodies according to our Procedures.

5. Compensate for long-term wetland impacts to forested wetlands through the use of the Lummi Nation Mitigation Bank and/or by participating with the Nooksack Indian Tribe and Whatcom County to implement potential mitigation project(s) in the Project area, where appropriate and available.

6. Implement the Fish Exclusion and Relocation Plan (see attachment C) to salvage and relocate fish from aquatic habitats affected by groundwater removal.

7. Northwest offered the opportunity to provide the Nooksack Indian Tribe and Whatcom County some timber for their own purposes as an in-kind mitigation contribution.

8. The Nooksack Indian Tribe suggested that another form of mitigation (besides timber clearing topic discussed above) would be to lower the “sill” at the inlet of Jim Creek to allow more fish passage.

9. All equipment would be washed offsite prior to entering the construction right-of-way to avoid introduction of noxious weeds or nuisance aquatic organisms. Equipment would be inspected for engine and hydraulic fluid leaks and confirmed to be “non-leaking” prior to entering a waterbody or working in the area.

10. To minimize the potential for spills and any impacts from such spills, Northwest’s Spill Plan (see attachment B) would be implemented. In general, hazardous materials, chemicals, fuels, lubricating oils and concrete-coating activities would be not be stored or

occur, nor would refueling operations be conducted within 100 feet of a wetland or waterbody in accordance with our Procedures and Northwest's Spill Plan.

11. Northwest's EI would visually monitor the groundwater, hydrostatic test water and trench dewatering activities to ensure that no erosion occurs or sedimentation enters waterbodies and would ensure that turbid water is not discharged to Waters of the State. If the EI determines that a discharge is entering a waterbody, the receiving water would be visually monitored for turbidity. If turbidity is observed, the dewatering operations would be immediately adjusted/reinstalled/repaired to ensure that the discharge to surface water is halted until water quality standards are met as would be required by WDOE's Section 401 Water Quality Certification and General Construction Stormwater Permit, which Northwest must obtain prior to construction.

12. After construction is complete, Northwest would disable the ELJs that were installed in 2015 by disconnecting metallic connections (removing all-thread rods, lag bolts, and chains) that are readily accessible from the surface by personnel working with hand tools. ELJ materials would become integrated in the Nooksack River Sub-basin by natural hydrologic forces over time.

5.2.4.5 Determination of Effects

Species. The Project **may affect** Puget Sound DPS steelhead because:

- Steelhead may be present in Jim Creek during Project implementation; and
- Steelhead would be present in NF Nooksack during Project implementation.

The Project **is likely to adversely affect** Puget Sound DPS steelhead for the following reasons:

- Juvenile steelhead may be present within the Action Area as surface water levels decline during construction and groundwater pumping.
- Juvenile steelhead may be salvaged from surface water in the Action Area with some risk of mortality or injury during capture and/or in storage containers or when released into alternative habitats.
- Mortality or injury of juvenile steelhead from dewatering and/or fish salvage operations would affect a small portion of the population present within the Nooksack River Sub-basin.
- The Project would temporarily restrict movements of steelhead in Jim Creek.
- The Project may temporarily alter hyporheic exchange with the NF Nooksack which could affect habitat suitability features that could include surface water temperatures, exchange of nutrients with groundwater, and amounts of habitats available in surface waters.

Critical Habitat. The Project **may affect** designated critical habitat for steelhead within the Puget Sound DPS because:

- The Project is within the riparian zone of critical habitat associated with the NF Nooksack.

Project components are **likely to adversely affect** designated critical habitat for steelhead within the Puget Sound DPS because:

- The Project would require clearing of 13.36 acres of native riparian vegetation (forest and forested wetlands) during construction within riparian zones associated with designated critical habitat in the NF Nooksack. Removal of riparian vegetation may affect components of PCE 2 and PCE 3 that specify shade, submerged and overhanging large wood that provide physical habitat conditions and support juvenile growth and cover to support juvenile and adult mobility and survival.

- Adverse effects to riparian zones would be long-term or permanent depending on the age of the riparian vegetation removed.

5.2.5 *Bull trout*

5.2.5.1 Species Account and Critical Habitat

Status. The Coastal-Puget Sound DPS of bull trout was listed as a threatened species in 1999 (FWS, 1999). With that final rule, all bull trout populations within the coterminous United States were listed as threatened including three other DPS that had been listed as threatened in earlier actions. The NF Nooksack River is within the Puget Sound Recovery Unit, one of two such units within the Coastal-Puget Sound DPS (FWS, 2015a).

Threats. At the time they were listed in 1999, abundance of bull trout in the Coastal-Puget Sound DPS had declined in many of the inhabited river basins. Bull trout and Dolly Varden (collectively "native char") were threatened by multiple effects including habitat degradation and fragmentation, blockage of migration routes, degraded water quality, harvest and introduction of non-native species (FWS, 1999 and 2004).

Species Recovery. A recovery plan for bull trout in the coterminous United States was published in 2015 (FWS, 2015a). The Coastal-Puget Sound DPS is one of five DPSs for which FWS has identified Core Recovery Areas, including the Nooksack River. A draft recovery plan for bull trout in the Puget Sound Management Unit was published in 2004 (FWS, 2004). The Puget Sound Management Unit includes all watersheds within the Puget Sound basin and the marine nearshore areas of Puget Sound. The management unit coincides with 57 local populations and five potential local populations which have been divided into eight core areas.

FWS (2015b) provides a specific recovery implementation plan for the Coastal Recovery Unit that includes the Coastal-Puget Sound DPS and bull trout in the Project area (see FWS, 2015a and 2015b). Primary threats in the Nooksack River Core Area include 1) impacts associated with past forest management and ongoing agricultural practices that have led to channelization and habitat degradation in the lower Nooksack River which adversely affects bull trout anadromy, 2) decreasing water quality through climate change and concomitant increasing water temperatures adversely affecting spawning and rearing habitats and anadromous migration, especially in the SF Nooksack, and 3) water diversion in the MF Nooksack limiting access by migratory bull trout (FWS, 2015b). In addition, brook trout may overlap local bull trout

populations in the Nooksack River Core Area but currently are not considered a primary threat (as nonnative species competition, hybridization).

Recovery in the Nooksack River Core Area is focused on actions that 1) restore and protect riparian areas, especially those adjacent to agricultural lands to enhance bank stability, stream shading and reduce nutrient input from agricultural practices, 2) reduce impacts from forest roads and mass wasting in the watershed, 3) restore and protect groundwater and hyporheic sources and cold water refugia in the SF Nooksack to sustain anadromy and connectivity among core area populations, and 4) provide adequate fish passage around a water diversion in the MF Nooksack. Recovery is also directed to establish monitoring of local populations of bull trout and of brook trout to assess magnitude of threats (FWS, 2015b).

Life History, Habitat Requirements and Distribution. Bull trout exhibit one of four life history strategies (WDFW, 2000):

1. Anadromous form; spawning and early rearing occurs in freshwater streams with major growth and maturation occurring in salt water.
2. Adfluvial form; spawning and early rearing occurs in freshwater streams and most growth and maturation occurs in lakes or reservoirs.
3. Fluvial form; spawning and early rearing occurs in smaller tributaries with major growth and maturation occurring in mainstem rivers.
4. Resident form; all life stages (spawning, rearing, growth, maturation) occurs in small headwater streams, often upstream of impassable barriers.

Bull trout require complex forms of cover including large woody debris, under cut banks, boulders and pools (WDFW, 2000). Population densities of bull trout are directly related to the amounts of instream woody debris which provides protection from predators and increases over winter survival (WDNR, 1997). Spawning generally occurs during late summer and early fall when water temperatures range from 5°C to 9°C (41°F to 48°F), utilizing loose, clean gravel substrates in low gradient streams. Eggs, alevins, and fry require clear water and are susceptible to sediment filling spaces between cobbles. Optimum water temperatures for egg incubation range from 2°C to 4°C (35°F to 39°F); for juvenile rearing temperatures range from 7°C to 8°C (44°F to 46°F) (FWS, 1999). Depending on the life history form, rearing and overwintering habitat vary but bull trout still require cool clean water with insects, macro-zooplankton, and small fish for larger adults to consume. Removing riparian vegetation contributes to higher water temperatures, increased sediment loads, decreased large woody debris, and decreases habitat suitability for bull trout.

In Washington State, native char may live for twelve years or more, may weigh over 20 pounds where adequate forage is available, and mature at age five after a relatively prolonged juvenile maturation period (WDFW, 2000). Adults begin to move upstream in April and most reach tributary streams in August, seeking cover in pools, with large woody debris, and with undercut banks until spawning which occurs during September and October (WDNR, 1997). Unlike salmon, bull trout are iteroparous; males may spawn multiple times and both sexes may spawn in successive or alternate years. After spawning, bull trout return to larger waterbodies (ocean, lake or mainstem river) depending on their life history (WDNR, 1997).

Bull trout express resident or migratory (fluvial, adfluvial or anadromous) life history strategies. Resident forms spend their entire life cycle in the tributary streams in which they spawn and rear, whereas migratory bull trout spawn in tributary streams where juvenile fish rear for 1 to 4 years before migrating to a lake, river or salt water (FWS, 2015a). Resident and migratory forms may be found together and either form may give rise to offspring exhibiting either resident or migratory behavior. Both anadromous and year-round resident bull trout occur in the Project area (StreamNet, 2012).

Bull trout are believed to be glacial relicts. Spawning sites are often associated with the coldest streams in a watershed and may be located at cold water spring outflows (FWS, 1999), with loose, clean gravel (FWS, 2015a). Optimum temperatures for juvenile rearing and egg incubation range between 44ºF and 66ºF and 35ºF to 39ºF, respectively. Water temperatures measured in NF Nooksack, MF Nooksack and the Nooksack River (see Figures 1.3-2 and 1.3-3) have average temperatures that are optimal for bull trout presence. However, water temperatures measured by WDOE (2017) in the Nooksack River at North Cedarville (water quality monitoring station 01A120) reported seasonal maximum water temperatures measured between June/July through September indicate temperatures exceeding 60ºF during July and August and exceeding 65ºF most years during those months which is likely too warm for bull trout.

Bull trout have been documented spawning in a few tributaries upstream of the Project area, and rearing is known to occur within or near the Project (WDFW, 2016d; StreamNet, 2012). Migrating bull trout begin upstream migration to spawning sites in May, and generally spawning occurs from August through December (see Figure 5.2-6). Juvenile migratory bull trout rear for 1 to 4 years in the natal stream before migrating (FWS, 2015a). Anadromous adults move downriver and enter the estuary during the spring while fluvial adults disperse upstream.

FWS (2015b) provided rankings for each core area included in the bull trout recovery plan including population abundance, distribution, trend, threat and final rank. The Nooksack River core area was provided a final rank of “potential risk” based on a moderate, imminent threat rank and unknown population abundance and trends.

Life Stage/Activity	Jan	Feb	Mar	Apr	May	Jun	Jul	Aug	Sep	Oct	Nov	Dec
Upstream Adult Migration												
Adult Spawning												
Intragravel Development												
Juvenile Rearing												
Juvenile Out-Migration								???				
Source: WRIA1 Salmon Recovery Board, 2005												

Figure 5.2-6
Approximate Timing of Bull Trout Use in the Nooksack Sub-basin

Population Status. As noted in the section above on bull trout recovery, one element for recovering populations in the Nooksack River Core Area is to establish spawning index areas to assess population abundance and trends (FWS, 2015b). Currently there are no monitoring areas and there are no estimates of bull trout populations in the Nooksack River Core Area.

Critical Habitat. Critical habitat for bull trout in the Coastal-Puget Sound DPS was designated in 2005 (FWS, 2005b) and was revised in 2010 (FWS, 2010e). Revised critical habitat was finalized in 2010 (FWS, 2010b) and included the Nooksack River, its three forks and accessible tributaries. Bull trout have more specific habitat requirements than most other salmonids that influence their distribution and abundance, such as water temperature, cover, spawning and rearing substrate, and migratory corridors. Critical habitat has been designated for foraging, migration and overwintering life functions (FWS, 2010b) in the NF Nooksack in the vicinity of the Project but has not been designated in Jim Creek.

The Puget Sound Unit was defined as Critical Habitat Unit 2. The FWS (2010b) identified nine PCEs with physical and biological features essential to bull trout conservation that consider water quality, migration corridors, food availability, instream habitat, water temperature, substrate characteristics, stream flow, water quantity and nonnative species.

1. Springs, seeps, groundwater sources, and subsurface water to contribute to water quality and quantity as a cold water source and provide thermal refugia.

2. Migratory corridors with minimal physical, biological, or water quality impediments between spawning, rearing, overwintering, and foraging habitats, including intermittent or seasonal barriers induced by high water temperatures or low flows.

3. An abundant food base including terrestrial organisms of riparian origin, aquatic macroinvertebrates, and forage fish.

4. Complex river, stream, lake, reservoir, and marine shoreline environments with multiple features including large woody debris, side channels, pools, and undercut banks that provide a variety of depths, gradients, velocities and structures.

5. Water temperatures ranging from 2 to 15°C (36 to 59°F), with adequate thermal refugia available if temperatures are at the upper end of the range.

6. In spawning and rearing areas, substrate of sufficient amount, size, and composition to ensure success of egg and embryo overwinter survival, fry emergence, and young-of-the-year and juvenile survival. A minimal amount of fine sediment, generally ranging in size from silt to coarse sand, embedded in larger substrates, is characteristic of these conditions.

7. A natural hydrograph, including peak, high, low, and base flows within historic and seasonal ranges or, if flows are controlled, minimal flow departure from a natural hydrograph.

8. Sufficient water quantity and quality such that normal reproduction, growth, and survival are not inhibited.

9. Sufficiently low levels of occurrence of non-native predatory (e.g., lake trout, walleye, northern pike, smallmouth bass); interbreeding (brook trout); or competing (brown trout) species that, if present, are adequately temporally and spatially isolated from bull trout.

5.2.5.2 Environmental Baseline

Species Presence. Analysis of mapped distributions of bull trout (StreamNet, 2012) reveals that more stream miles are utilized for rearing and migration (181 stream miles) in the Nooksack Sub-basin (HUC 17110004) than for migration only (42 stream miles) or spawning and rearing (14 stream miles). In the Nooksack River-Frontal Bellingham Bay 5th Field watershed that includes the Project area, bull trout do not spawn but utilize streams for migration-only (12 stream miles) or for rearing and migration (45 stream miles). Spawning appears mostly limited to the Upper NF Nooksack 5th Field watershed (7 stream miles) with some spawning in the MF Nooksack (3 stream miles) and SF Nooksack (3 stream miles).

WDFW's SalmonScape (WDFW, 2016d) shows that bull trout utilize the NF Nooksack for juvenile rearing in the immediate vicinity of the Project area as well as upstream and downstream. SalmonScape also indicates that bull trout are present in Jim Creek, including stream segments within the Project area.

Habitat. The lower NF Nooksack has recently been assessed by the Nooksack Tribe Natural Resources Department within 14 reaches, including a 1.6-mile reach (RM 36.7 to RM 38.3) that incorporates the proposed Project (see Hyatt, 2007). This reach of the NF Nooksack is the most actively shifting section of the river, creating a wide and heavily braided channel with extensive islands and back channel complexes. The channel has increased in width from 230 meters (755 feet) in 1938 to 440 meters (1,444 feet) in 2005. Wetted habitat in the area is evenly split among riffle, glide and slough habitat, providing productive habitats for salmon and other native resident fish. This area of the NF Nooksack also has the largest area of isolated pools that are connected at high flow, but are disconnected from the NF Nooksack mainstem at low flows. The NF Nooksack floodplain is about 65 percent of historic channel migration zone forest cover, close to restoration goals of 70 percent (Nooksack Indian Tribe, 2016), although only 1.3 percent of the floodplain has enough mature timber that can contribute to LWD loading (Hyatt, 2007) and, consequently, there is little recruitment of LWD.

In the reach of the NF Nooksack near the Project, LWD loading is relatively high in comparison to other portions of the NF Nooksack as a result of channel avulsion that occurred in October 2003 that eroded approximately 17 acres of mostly mature coniferous timber. Within the 1.6-mile reach including the Project area, there were seven key LWD key pieces greater than $9m^3$ and 14 LWD jams that were large enough to affect the channel at high flows; on average, there were 0.11 key pieces per 100 meters of channel (Hyatt, 2007). Additionally, Northwest installed ELJs along approximately 500 feet of the north bank of the NF Nooksack in 2015. The ELJs were designed to prevent exposure of the existing 30-inch pipeline during erosion of the right bank.

WDOE (2017) measured water temperatures in the Nooksack River mainstem at North Cedarville (water quality monitoring station 01A120) approximately four miles west of Deming and downstream from the Project area, from 2001 through 2010. Seasonal maximum water temperatures measured between June/July through September indicate temperatures exceeding 60°F during July and August and exceeding 65°F most years during those months. This monitoring station is below the confluence of the NF Nooksack and SF Nooksack. The high water temperatures in the mainstem are influenced by high water temperatures from the SF Nooksack which peak during July and August, sometimes exceeding 65°F. The high water

temperatures in the Nooksack River mainstem may present a thermal barrier to bull trout movements during summer.

Critical Habitat. Critical habitat for bull trout in the Coastal-Puget Sound DPS has been designated within the NF Nooksack in the vicinity of the Project. Critical habitat has not been designated in Jim Creek.

5.2.5.3 Environmental Effects

Direct and Indirect Effects

Construction of the Project could directly and/or indirectly affect bull trout present in the Action Area through one or more of the following pathways:

- Interference with key life history functions for native species.
- Mortality and/or injury of fish from stranding in surface waters drawn down during pumping groundwater and during fish salvage.
- Disruption of hyporheic exchange with the NF Nooksack.
- Turbidity generated during water discharged into Jim Creek and NF Nooksack from pumped groundwater.
- Removal of riparian vegetation could reduce shade, which could increase water temperatures in Jim Creek.
- Accidental release of fuels and entry of other petroleum products into surface waters could adversely affect all fish species and other aquatic organisms.
- Application of herbicides to control noxious weeds near waterbodies.

Interference with Life History Functions. WDFW indicated (during an interagency Project meeting held in February 2017) that the standard in-water work windows which are typically applied to HPA permits would not be applied to this atypical Project. WDFW stated that the standard recommended in-water work period for the Project area is typically a three-week period between late-July and mid-August. However, the U.S. Army Corps of Engineers lists June 15 to July 31 for the in-water work period for the Project area.

There is considerable variation of life phase timing between anadromous fish species but generally, construction of the Project (June through September) would coincide with upstream migration, juvenile rearing, and juvenile out-migration for bull trout (see Figure 5.2-5). Adult spawning, embryonic intragravel development in the NF Nooksack by bull trout may occur during Project construction but not in the vicinity of the actions. The primary habitat functions of Jim Creek for bull trout are assumed to be for use during upstream migration and juvenile rearing. Block-screening placed across Jim Creek downstream of the construction right-of-way and damming the upper Jim Creek connection with NF Nooksack prior to initiating construction (see Fish Exclusion and Relocation Plan in attachment C) would eliminate its use by bull trout during the construction period, June through September. Bull trout may migrate in the NF

Nooksack in the Project area vicinity but are not expected during summer if water temperatures exceed preferred levels (>59°F).

Mortality and/or Injury of Fish by Stranding and During Salvage. As described above for Chinook salmon, the dewatering program would include the use of well points drilled on either side of the new 30-inch trench alignment. A typical system may include wells installed on 30-foot centers, extending 15 feet below the bottom of the trench; containing a filter casing surrounded by filter media (pea rock). A pump would be installed in each casing with a discharge riser connected at the surface to a header pipe that connects all of the well points together. The common header pipe discharge would be directed into additional piping and/or hoses that would be routed to the west of the Project area to allow groundwater discharge directly into Jim Creek or the NF Nooksack. The piping and hoses would be appropriately sized for the volume of water to be discharged. It should be understood that site-specific conditions at the time of construction would dictate the dewatering system configuration including well location/depth/number, pump performance requirements, header sizing and discharge pipeline configuration. The Jim Creek system has not been precisely defined but is known to include several channels and ponds that are likely to be interconnected by groundwater, much or all of which may have hyporheic connection with the NF Nooksack.

It is not possible to estimate numbers of anadromous species in the Jim Creek system that may be stranded between blocknets and cofferdams installed immediately prior to groundwater removal and that may be salvaged (see attachment C) during construction. StreamNet (2012) has mapped Jim Creek as chum and coho salmon migration habitat, extending for a length of 1.02 stream miles upstream from the lower confluence with the NF Nooksack. It is assumed that Jim Creek may be utilized during migration by bull trout and may potentially be used as quiet off-channel habitat for juvenile rearing by various species (discussed by Smith, 2002) including bull trout, even though not documented.

StreamNet (2012) provides maps of streams occupied by species utilizing various stream lengths as functional habitat: 1) migration only, 2) rearing and migration, and 3) spawning and rearing. Table 5.2-6 provides the total linear distances, in stream miles, of those habitats for bull trout within the Nooksack Sub-basin (HUC 17110004). Table 5.2-6 also shows the relative importance of Jim Creek, if it was used for the specific functional habitat. The relative importance of Jim Creek as specified habitat and total habitat for bull trout is small in comparison with the Nooksack Sub-basin (HUC 17110004). This analysis suggests that numbers of bull trout potentially stranded during the dewatering process would be a small fraction of numbers expected within the remaining Nooksack Sub-basin during the time of construction. For bull trout, use of Jim Creek during construction would coincide with adult up-stream migration, juvenile rearing and juvenile out-migration (see Figure 5.2-5).

Table 5.2-6
The Extent (stream miles) of Bull Trout Migration, Spawning, and/or Rearing Habitats in the Nooksack Sub-basin (HUC 17110004) in Comparison to Assumed Extent of Habitats in Jim Creek [1]

Bull Trout Habitat Use	Extent of Habitats	
	Nooksack Sub-basin (Stream miles)	Total Habitat Assumed in Jim Creek [1]
Migration Only	46.25	2.21%
Rearing and Migration	181.47	0.56%
Spawning and Rearing	13.92	7.33%
Total Mapped Habitat	241.65	0.42%

Source: StreamNet, 2012.
Notes:
[1] StreamNet has mapped 1.02 miles of coho migration-only habitat which is assumed to be potential migration and/or rearing habitat for other anadromous species.

A Fish Exclusion and Relocation Plan (see attachment C) has been proposed to collect anadromous salmonids and other fish and aquatic species from surface waters in the Jim Creek system as water is drawn down. Fish salvaged under the plan would be relocated to unaffected water, potentially Jim Creek downstream from the Project area and/or the NF Nooksack. Seining would be the primary method utilized for fish salvage rather than electrofishing as discussed above for Chinook salmon. Also, some portion of fish salvaged may expire or not survive relocation into habitats different from those from which they were salvaged. A variety of physiological stress responses to extreme capture and holding conditions has been related to exhaustive exercise, which can adversely affect survival once fish are released (Gallaugher and Farrel, 1999).

Disruption of Hyporheic Exchange. Hyporheic flow is important for surface water/groundwater interactions that influence bull trout spawning sites and use of other habitats (e.g., juvenile rearing, migration) which are often associated with cold-water springs, glacial and snow melt, or groundwater upwelling (FWS, 2005). In addition to influencing spawning site selection, hyporheic flows from springs, seeps and subsurface water provide thermal refugia for bull trout when water temperatures exceed 59ºF. The importance of hyporheic flows and thermal refugia have been included as PCEs in defining bull trout critical habitat (see above and FWS, 2005).

As discussed above for Chinook salmon, the extent of the hyporheic zone adjacent to the Jim Creek system is unknown and it is likely to vary over time, depending on discharge and other properties of surface and groundwater flow (Tonina and Buffington, 2009). The action of pumping groundwater is expected to draw-down surface water in the Jim Creek system within some unknown distance from the trench and may affect hyporheic exchange to some extent locally with the NF Nooksack for the Project duration.

Pumps would continue removing groundwater while the trench is open but some water is expected to seep into the trench while open. Trench water would be pumped into a dewatering structure for controlled surface discharge and infiltration. The pumped well point water would be cold, clear groundwater that may be discharged directly or indirectly into the Jim Creek system or to the NF Nooksack. Water would be discharged at a rate to prevent scour, erosion and sedimentation.

Water required for hydrostatic testing of the newly installed 30-inch pipeline would be obtained from the dewatering wells and would be discharged to the surface for infiltration. Hydrostatic test water would be discharged at a rate to prevent scour, erosion and sediment migration to sensitive resources such as wetlands and waterbodies.

Turbidity Effects. At high levels, turbidity directly affects growth of salmonids and other species and their survival by interfering with gill function and adversely affecting substrate for egg development (reviewed by Bash et al., 2001) as discussed above for Chinook salmon.

As discussed in the previous section, groundwater would be continuously pumped prior to and during trench construction with substantial volumes of groundwater removed from an unknown area surrounding the trench. Also discussed was the Fish Exclusion and Relocation Plan (see attachment C) which includes blocking water flow from entering Jim Creek from the NF Nooksack before groundwater wells and pumps are installed and operational. Jim Creek is expected to not have any water flow at the time of construction.

To remedy the affected flows in Jim Creek, Northwest would direct some pumped groundwater to flow into Jim Creek downstream from the edge of the construction right-of-way; the rest would be pumped into the NF Nooksack. Discharge of pumped groundwater into Jim Creek could mobilize sediment and generate turbidity. Estimates of discharge (cfs) in Jim Creek are provided in Table 5.2-4 and discussed above for Chinook salmon.

In addition to discharge of pumped groundwater into Jim Creek, a portion of pumped water would be discharged into the NF Nooksack. Based on potential individual pump rates of 400 gpm, it seems reasonable that the amount of pumped groundwater discharged into Jim Creek would result in moderate instream flows, such as in the example under Chinook salmon. Water pumped into Jim Creek could generate some turbidity while flowing downstream through a dry channel but levels of turbidity are not expected to exceed usual levels that would occur with flows entering from the upper confluence with the NF Nooksack.

Newcombe and Jensen (1996) compiled research from many sources that demonstrate effects to anadromous and resident salmonids by various levels of suspended sediment and exposures over time. The modeling process was briefly described for Chinook salmon but also would apply to bull trout. Based on the severity of effects model, juvenile and/or adult salmonids in Jim Creek downstream from the pumped water release site might be exposed to more than 10 mg/l but less than 100 mg/l of suspended solids during initial flows but no additional turbidity pulse would be expected with continued pumping of groundwater. An initial pulse of suspended solids with concentration of 10 to 100 mg/l would likely last for less than one hour at any location in the Jim Creek channel (to flow a distance of 3,200 feet at a depth of 3 feet, with discharge of 26.26 cfs, and velocity of 1.1 feet per second, for example); the severity of effects

would be well below a SEV score of 8 (sub-lethal), more in the range of 2 to 6 with effects to behavior, probably avoidance.

From this analysis, it appears reasonable that the amount of pumped groundwater discharged into Jim Creek would result in moderate instream flows, certainly less than estimated bankfull flows. Water pumped into Jim Creek could generate some turbidity while flowing downstream through a dry channel but levels of turbidity are not expected to exceed usual levels that would occur with flows entering from the upper confluence with the NF Nooksack.

Similarly, groundwater pumped into the NF Nooksack might mobilize some sediments in stream channels but that effect would be short-lived and would not expose fish downstream to high concentrations of suspended sediment for prolonged periods. WDOE (2017) reported an average concentration of suspended solids of 37 mg/l from June through September 2015 for the Nooksack River downstream from the Project near North Cedarville (Station 01A120). Discharge of groundwater into the NF Nooksack is not expected to significantly contribute to background levels. By pumping groundwater into the NF Nooksack, Northwest would compensate for diminished hyporheic exchange with the surface water and minimize adverse effects to bull trout critical habitat (see above and FWS, 2005).

Northwest's EI would visually monitor the groundwater, hydrostatic test water and trench dewatering activities to ensure that no erosion occurs or sedimentation enters waterbodies and would ensure that turbid water is not discharged to Waters of the State. If the EI determines that a discharge is entering a waterbody, the receiving water would be visually monitored for turbidity. If turbidity is observed, the dewatering operations would be immediately adjusted/reinstalled/repaired to ensure that the discharge to surface water is halted until water quality standards are met as would be required by WDOE's Section 401 Water Quality Certification and General Construction Stormwater Permit, which Northwest must obtain prior to construction.

Accidental Releases. Aquatic habitats in the Project area could be adversely affected if petroleum products were accidentally discharged into groundwater and/or surface waters. Such materials are toxic to algae, invertebrates and fish, as discussed above for Chinook salmon.

According to our Procedures (Section IV.A.1.d and e) and the ECRP (see attachment A), 1) no equipment would be parked overnight or fueled within 100 feet from a waterbody or wetlands boundary, and 2) no hazardous materials, including chemicals, fuels, and lubricating oils, would be stored within 100 feet of a wetland, waterbody, or designated municipal watershed area, unless the location is designated for such use by an appropriate governmental authority. Adhering to these procedures would minimize any risk of accidental discharge of hazardous compounds, including petroleum products, into waterbodies and associated wetlands potentially utilized by bull trout.

Water Temperature Effects. As discussed above for Chinook salmon, water temperature can be affected by removal of riparian forested vegetation. Increased water temperatures can affect survival of fry and juvenile salmonids due to direct lethality, increased susceptibility to sediment toxicity (Richter and Kolmes, 2005), and to infectious disease and parasite loads (McCullough, 1999) although susceptibility to temperatures changes may depend on water temperatures to which juveniles have been acclimated (McCullough, 1999). Optimum water

temperatures for juvenile bull trout rearing range from 7°C to 8°C (44°F to 46°F) (FWS, 1999). WDOE (2017) reported seasonal maximum water temperatures measured between June/July through September indicating temperatures exceeding 60ºF during July and August and exceeding 65ºF most years during those months. Summer water temperatures in Jim Creek would likely be higher than in the Nooksack River due to the prevalence of shallow water with limited flow. Temperatures that high might preclude bull trout from that portion of the NF Nooksack and Jim Creek.

Shade trees would be removed within the riparian zone of Jim Creek with some potential to increase water temperatures. Areas of surface water exposed to increased solar loading would depend on heights of trees that would be removed and their shadows. The effect, if measurable, would be greatest when the sun's altitude from the horizon is highest, which is on the summer solstice. Available information discussed for Chinook salmon indicates that the small amounts of increased solar loading on water surfaces caused by pipeline construction do not measurably increase water temperatures.

The Project would not remove trees that cast shadows on water surfaces of the NF Nooksack; no effects to temperature in the NF Nooksack are expected from construction or operation of the Project.

Herbicides. Herbicides have the potential to cause toxic effects to different salmonid life stages and to other aquatic species, causing direct impacts, if used improperly. When herbicides are properly used according to label restrictions and BMPs to control noxious weeds, there is little to no chance of causing injury or mortality to fish or other aquatic organisms.

No herbicides would be used to control vegetation (i.e., brush and trees) on the permanent easement unless approved or required by the landowner. Vegetation would be periodically maintained using mowing, cutting, trimming and herbicides (selectively). Selective use of herbicides could be used to control noxious weed infestations along the permanent easement. All use of herbicides would be in accordance with state and local regulations and landowner approval and would be consistent with our Plan and Procedures. Considering the potential for limited use of herbicides within the Project area and precautions that would be in place to prevent entry into waters, meaningful negative effects to bull trout from herbicides would be unlikely to occur (e.g., Tu et al, 2001; WSDOT, 2011b).

Interrelated and Interdependent Effects. No interrelated or interdependent actions are associated with the Project.

Cumulative Effects. There are no actions by state or private entities known or reasonably certain to occur within the Action Area that would cumulatively affect bull trout.

Critical Habitat. There is no designated critical habitat in Jim Creek that would be affected by the Project. Critical habitat for bull trout has been designated in the NF Nooksack. Some groundwater removed by pumps would likely be discharged into Jim Creek and an initial pulse of suspended sediments (discussed above) would likely enter the NF Nooksack downstream. Also, some pumped groundwater may be discharged directly into the NF Nooksack. Both actions would likely increase local quantities of water that could increase flows within critical habitat during periods when high flows generally occur in the NF Nooksack and MF Nooksack

(June and July, see Figure 1.3-1 in Section 1.3). Additional flows would alter natural hydrography and hyporheic water exchange during that period that may affect PCE #1 listed above for bull trout critical habitat. To some degree, release of pumped ground water into the NF Nooksack is expected to compensate for reduction of hyporheic flow over the short term.

5.2.5.4 Conservation Measures

Northwest would adhere to conditions in our Plan and Procedures that are specifically designed to avoid or minimize effects to waterbodies and fisheries habitats. In addition, Northwest has prepared a Project-specific ECRP (see attachment A). These documents provide BMPs that would avoid, minimize and restore project-related effects to fisheries resources and are not reiterated here.

In addition, Northwest proposes the following mitigation measures that minimize impact, restore affected habitats, provide habitat enhancement and provide compensatory measures for adverse effects to federally listed salmonids and critical habitats.

1. Discharge a portion of groundwater into Jim Creek to provide instream flows downstream from the Project area, potentially providing spawning habitat for steelhead at the downstream confluence with NF Nooksack.

2. Discharge a portion of groundwater into the NF Nooksack to compensate for decreased hyporheic exchange during construction.

3. Install LWD in Jim Creek and on banks to provide shade and habitat complexity. The installation, placement and configuration of LWD in Jim Creek is described in the *Jim Creek Restoration and Habitat Enhancement Plan* (Golder, 2017) (available upon request).

4. Replant riparian areas up to 25 feet either side of waterbodies according to our Procedures.

5. Compensate for long-term wetland impacts to forested wetlands through the use of the Lummi Nation Mitigation Bank and/or by participating with the Nooksack Indian Tribe and Whatcom County to implement potential mitigation project(s) in the Project area, where appropriate and available.

6. Implement the Fish Exclusion and Relocation Plan (see attachment C) to salvage and relocate fish from aquatic habitats affected by groundwater removal.

7. Northwest offered the opportunity to provide the Nooksack Indian Tribe and Whatcom County some timber for their own purposes as an in-kind mitigation contribution.

8. The Nooksack Indian Tribe suggested that another form of mitigation (besides timber clearing topic discussed above) would be to lower the “sill” at the inlet of Jim Creek to allow more fish passage.

9. All equipment would be washed offsite prior to entering the construction right-of-way to avoid introduction of noxious weeds or nuisance aquatic organisms. Equipment would

be inspected for engine and hydraulic fluid leaks and confirmed to be "non-leaking" prior to entering a waterbody or working in the area.

10. To minimize the potential for spills and any impacts from such spills, Northwest's Spill Plan (see attachment B) would be implemented. In general, hazardous materials, chemicals, fuels, lubricating oils and concrete-coating activities would be not be stored or occur, nor would refueling operations be conducted within 100 feet of a wetland or waterbody in accordance with our Procedures and Northwest's Spill Plan.

11. Northwest's EI would visually monitor the groundwater, hydrostatic test water and trench dewatering activities to ensure that no erosion occurs or sedimentation enters waterbodies and would ensure that turbid water is not discharged to Waters of the State. If the EI determines that a discharge is entering a waterbody, the receiving water would be visually monitored for turbidity. If turbidity is observed, the dewatering operations would be immediately adjusted/reinstalled/repaired to ensure that the discharge to surface water is halted until water quality standards are met as would be required by WDOE's Section 401 Water Quality Certification and General Construction Stormwater Permit, which Northwest must obtain prior to construction.

12. After construction is complete, Northwest would disable the ELJs that were installed in 2015 by disconnecting metallic connections (removing all-thread rods, lag bolts, and chains) that are readily accessible from the surface by personnel working with hand tools. ELJ materials would become integrated in the Nooksack River Sub-basin by natural hydrologic forces over time.

5.2.5.5 Determination of Effects

Species. The Project **may affect** Coastal-Puget Sound DPS bull trout because:

- Bull trout may be present in Jim Creek during Project implementation; and
- Bull trout would be present in NF Nooksack during Project implementation.

The Project **is likely to adversely affect** Coastal-Puget Sound DPS bull trout for the following reasons:

- Juvenile bull trout may be present within the Action Area as surface water levels decline during construction and groundwater pumping.
- Juvenile bull trout may be salvaged from surface water in the Action Area with some risk of mortality or injury during capture and/or in storage containers or when released into alternative habitats.
- Mortality or injury of juvenile bull trout from dewatering and/or fish salvage operations would affect a small portion of the population present within the Nooksack River Sub-basin.
- The Project would temporarily restrict movements of bull trout in Jim Creek.

- The Project may temporarily alter hyporheic exchange with the NF Nooksack which could affect habitat suitability features that could include surface water temperatures, exchange of nutrients with groundwater, and amounts of habitats available in surface waters.

Critical Habitat. The Project **may affect** designated critical habitat for Coastal-Puget Sound DPS bull trout because:

- The Project is within the riparian zone of critical habitat associated with the NF Nooksack.

Project components are **likely to adversely affect** designated critical habitat for Coastal-Puget Sound DPS bull trout because:

- The Project would temporarily alter hyporheic exchange with the NF Nooksack which could affect PCE 1 (springs, seeps, groundwater sources, and subsurface water that contribute to water quality and quantity as a cold water source and provide thermal refugia).

- The Project could temporarily affect PCE 2 (migratory corridors with minimal physical, biological, or water quality impediments between spawning, rearing, overwintering, and foraging habitats, including intermittent or seasonal barriers induced by high water temperatures or low flows).

- The Project would require clearing 13.36 acres of native riparian vegetation (forest and wetlands) during construction within riparian zones associated with designated critical habitat in the NF Nooksack. Removal of riparian vegetation may affect components of PCE 4 (complex river, stream, lake, reservoir, and marine shoreline environments with multiple features including LWD, side channels, pools, and undercut banks that provide a variety of depths, gradients, velocities and structures).

- The Project would temporarily alter the local natural hydrography in the NF Nooksack by discharging pumped groundwater into Jim Creek and the NF Nooksack, affect PCE 7 (a natural hydrograph, including peak, high, low, and base flows within historic and seasonal ranges or, if flows are controlled, minimal flow departure from a natural hydrograph).

6.0 Essential Fish Habitat

The PFMC amended the Pacific Coast Salmon Plan to identify and describe Essential Fish Habitat (EFH) and adverse impacts and recommended conservation measures for Chinook salmon, coho salmon and Puget Sound pink salmon which are present in the Nooksack Hydrologic Unit 17110004 (PFMC, 1999). The Magnuson-Stevens Act describes EFH as waters and substrate necessary to fish for spawning, breeding, feeding or growth to maturity (NMFS, 1997). In freshwater, EFH for Chinook salmon, coho and pink salmon includes habitats for spawning and incubation, juvenile rearing, juvenile migration corridors and adult migration corridors (and adult holding habitat for Chinook salmon; PFMC, 1999).

The Sustainable Fisheries Act of 1996 amended the Magnuson-Stevens Act and requires federal agencies, in part, to consult with NMFS about activities that may adversely affect EFH (NMFS, 1997). The Magnuson-Stevens Act established guidelines for Regional Fishery Management Councils to identify and describe EFH in Fishery Management Plans (FMPs) to responsibly manage exploited fish and invertebrate species in federal waters. The Pacific Fishery Management Council (PFMC) developed a Fishery Management Plan (FMP) that addresses EFH for Pacific salmon. The PFMC has amended the Pacific Coast Salmon Plan (PFMC, 1997) to identify and describe EFH and adverse impacts and recommended conservation measures for Chinook salmon, coho salmon, and pink salmon (odd-year), which are present in the Nooksack Sub-basin (PFMC, 2016). Chinook salmon in the Nooksack Sub-basin were addressed above, and only coho and pink salmon are discussed below.

6.1 Other EFH Species

Coho Salmon. Coho in the Nooksack River are within the Puget Sound/Strait of Georgia ESU, and were designated as a species of concern (SOC) in 2004. Washington State includes coho salmon as a priority species under the WDFW Priority Habitats and Species Project (WDFW, 2017). Coho utilize the NF Nooksack mainstem for migration and for juvenile rearing; spawning occurs in small, accessible tributaries to the NF Nooksack in areas of mid-velocity water with small- to medium-sized gravel (WDFW, 2016a and 2016b; Sandercock, 1991).

Typically coho salmon begin their spawning migration as 3-year olds in late summer and fall and spawn by mid-winter. Adult coho salmon rarely migrate farther up freshwater streams greater than 150 miles and generally return to spawn at sites where they hatched. Returning to parental spawning grounds ensures repeated use of suitable redd sites (Sandercock, 1991). Eggs incubate for 1.5 to 4 months and then hatch and emerge from the gravel in the spring. Juveniles rear for about a year in freshwater before migrating in the spring to the ocean. Coho generally spend two growing seasons within the ocean before migrating back to their natal stream to spawn (Good et al., 2005). Approximate timing of life stages for coho in the Nooksack River population are summarized in Figure 6.1-1.

Life Stage/Activity	Jan	Feb	Mar	Apr	May	Jun	Jul	Aug	Sep	Oct	Nov	Dec
Upstream Adult Migration												
Adult Spawning		???										
Intragravel Development												
Juvenile Rearing												
Juvenile Out-Migration												

Source: WRIA 1 Salmon Recovery Board, 2005
??? = activity during this month is suspected, but not documented

Figure 6.1-1
Approximate Timing of Coho Salmon Use in the Nooksack Sub-basin

Preferred water temperatures during adult coho salmon upstream migration range between 45°F to 60°F (Laufle et al., 1986). Coho migrating upstream to spawning grounds begin in July

and continue through February, coinciding with cooler water temperatures in the Nooksack River basin (see Figure 3.2-2, above). The preferred temperature range for juvenile survival is between 53ºF to 58ºF (Laufle et al., 1986). Juvenile rearing has been documented in the Project area (WDFW, 2016b) and would be expected in the low velocity pools, riffles, sloughs, wetlands and side channels that would likely have warmer temperatures preferred for rearing (Hyatt, 2007).

The Nooksack River coho population that occurs in the Project area is a mixed composition of non-native hatchery-origin stock, and possibly a native population that spawns north of Kendall Creek Hatchery (WDFW, 2016c). The 1995 status review of coho salmon in Washington indicated that the status of the Nooksack River coho was unknown (Weitkamp et al., 1995).

StreamNet (2012) has mapped Jim Creek as coho salmon migration habitat, extending for a length of 1.02 stream miles upstream from the lower confluence with the NF Nooksack. It is assumed that Jim Creek may be utilized as quiet off-channel habitat for juvenile rearing by various species (discussed by Smith, 2002), even though not documented. StreamNet (2012) provides maps of streams occupied by species utilizing various stream lengths as functional habitat: 1) migration only, 2) rearing and migration, and 3) spawning and rearing. Table 6.1-1 provides the total linear distances, in stream miles, of those habitats for coho salmon within the Nooksack Sub-basin (HUC 17110004). Table 6.1-1 also shows the relative importance of Jim Creek, if it was used by coho for the specific functional habitat. The relative importance of Jim Creek as specified habitat and total habitat for coho is small in comparison with the Nooksack Sub-basin (HUC 17110004).

Table 6.1-1
The Extent (stream miles) of Coho Salmon Migration, Spawning, and/or Rearing Habitats in the Nooksack Sub-basin (HUC 17110004) in Comparison to Assumed Extent of Habitats in Jim Creek [1]

Coho Salmon Habitat Use	Extent of Habitats	
	Nooksack Sub-basin (Stream miles)	Total Habitat Assumed in Jim Creek [1]
Migration Only	269.20	0.38%
Rearing and Migration	166.82	0.61%
Spawning and Rearing	28.91	3.53%
Total Mapped Habitat	464.93	0.22%

Source: StreamNet, 2012.
Notes:
[1] StreamNet has mapped 1.02 miles of coho migration-only habitat which is assumed to be potential migration and/or rearing habitat for other anadromous species.

Although historical annual escapement estimates are available for coho in the Nooksack River system (see Figure 6.1-2), the escapement number of coho in the Nooksack River fluctuates, and is likely a result of methodologies for annual escapement estimations with unknown precision and accuracy, as well as fluctuation in hatchery releases and natural

production. WDFW cautions that the utility of the estimates as absolute escapement values or relative indices of escapement is currently unknown (WDFW, 2016c).

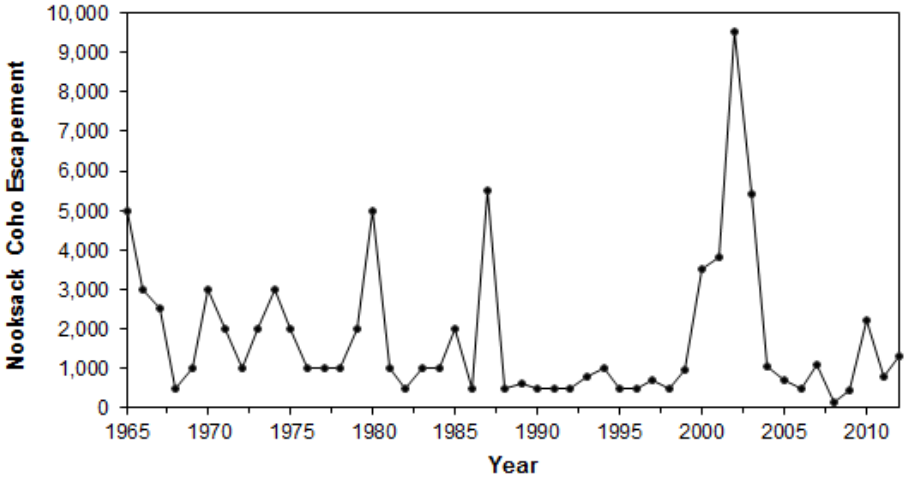

Figure 6.1-2
Estimates of Coho Escapement for the Nooksack River Basin from 1965 through 2012

WDFW's SalmonScape (http://apps.wdfw.wa.gov/salmonscape/) shows that coho utilize the NF Nooksack for juvenile rearing in the immediate vicinity of the Project area as well as upstream and downstream. Coho are also present in Jim Creek and are presumed to occur in the upper-most reaches of Jim Creek including segments north of Truck Road and SR 542.

Pink Salmon. Pink salmon do not have Federal or State status; however, pink salmon are included as a priority species under the WDFW Priority Habitats and Species Project (WDFW, 2017). Puget Sound pink salmon return to spawn in natal streams only on the odd-numbered years. Pinks in the Nooksack Sub-basin are a native stock with wild production and are known to spawn in the mainstems of the three forks of the Nooksack River, as well as accessible tributaries (WDFW, 2016d; StreamNet, 2012). Shaklee et al. (1995) identified the pink salmon spawning in the Nooksack River system as a distinct stock from other Puget Sound pink salmon based on their spawning distribution, early return timing, small size, and distinct genetic profile (WDFW, 2016d). Spawning generally occurs from RM 44 to RM 65 (a natural falls) in the NF Nooksack and in most year-round tributaries, upstream from the Project area (WDFW, 2016b and 2016d; StreamNet, 2012).

Pink salmon are the smallest of the fall-spawning Pacific salmon and begin migrating to natal spawning sites in July, and possibly June. Pink salmon spawn in shallow pools and riffles with clean, coarse gravel and moderately fast currents. After intravel development, their fry move directly to the sea after emerging and therefore no juvenile rearing occurs in freshwater. Pink salmon live for two years in salt water before returning to freshwater natal grounds to spawn. Approximate timing of life stages for pink salmon (odd-year) in the Nooksack River population are summarized in Figure 6.1-3.

Life Stage/Activity	Jan	Feb	Mar	Apr	May	Jun	Jul	Aug	Sep	Oct	Nov	Dec
Upstream Adult Migration						???						
Adult Spawning												
Intragravel Development												
Juvenile Rearing (N/A)												
Juvenile Out-Migration												
Source: WRIA1 Salmon Recovery Board, 2005												

Figure 6.1-3
Approximate Timing of Pink Salmon (Odd Year) Use in the Nooksack River Sub-basin

Estimates of pink salmon in the Nooksack River system are based on live spawner counts from 10 creeks in the Nooksack Sub-basin (WDFW, 2016c). Pink salmon counts have fluctuated since 1967 (see Figure 6.1-4), but are generally around 50,000 or greater (StreamNet, 2012).

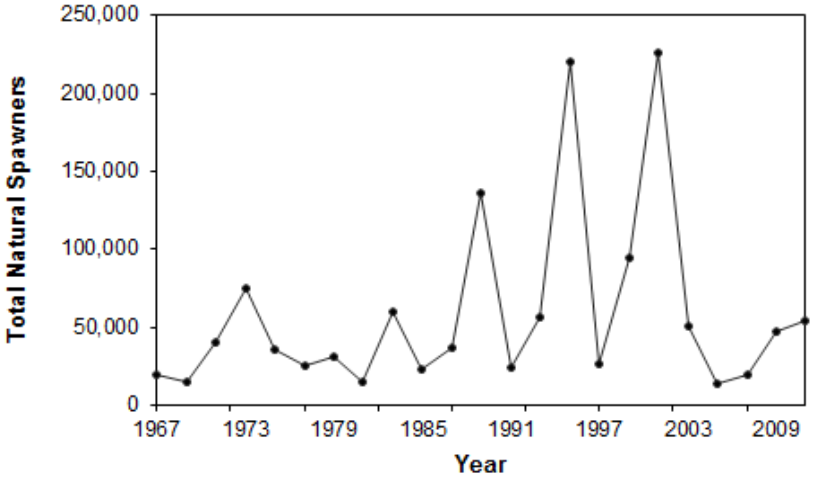

Figure 6.1-4
Estimates of Pink Salmon (odd-year) Spawner Abundance in the Nooksack River from 1967 through 2011

Analysis of mapped distributions of pink salmon (StreamNet, 2012) in the Nooksack River-Frontal Bellingham Bay 5th Field watershed indicates they mostly migrate through the watershed (40 stream miles, migration only habitat) with 11 stream miles utilized as spawning and rearing habitat. However, WDFW's SalmonScape (WDFW, 2016b) shows that odd-year pink salmon may also utilize the NF Nooksack for spawning in the immediate vicinity of the Project area, as well as upstream and downstream. SalmonScape also indicates that odd-year pink salmon are present in Jim Creek.

6.2 Effects to Essential Fish Habitat

Direct and Indirect Effects. In the Action Area, available data indicate that EFH is present in Jim Creek which supports migration habitat for coho salmon. Coho juvenile rearing is assumed as well as juvenile rearing by Chinook salmon, although use as rearing habitat in Jim

Creek has not been specified. As discussed above, pink salmon may be present in Jim Creek but actual utilization as EFH by the three species is unknown.

Effects to Pacific Salmon EFH includes the effects to habitat required to support a species' spawning, breeding, feeding or growth to maturity during the full life cycle. As discussed above for Chinook salmon, steelhead and bull trout, the Project may:

- interfere with key life history functions of EFH species,
- cause mortality and/or injury of fish from stranding in surface waters drawn down during pumping groundwater and during fish salvage,
- disrupt hyporheic exchange of groundwater in the Jim Creek system with the NF Nooksack,
- generate turbidity during water discharged into Jim Creek and NF Nooksack from pumped groundwater.
- remove riparian vegetation that could reduce shade and increase water temperatures in Jim Creek,
- result in accidental release of fuels and entry of other petroleum products into surface waters, and
- apply herbicides to control noxious weeds near waterbodies

The same conservation measures described in the BA for listed fish species apply to mitigate effects to EFH:

1. Discharge a portion of groundwater into Jim Creek to provide instream flows downstream from the Project area, potentially providing spawning habitat for steelhead at the downstream confluence with NF Nooksack.
2. Discharge a portion of groundwater into the NF Nooksack to compensate for decreased hyporheic exchange during construction.
3. Install LWD in Jim Creek and on banks to provide shade and habitat complexity. The installation, placement and configuration of LWD in Jim Creek is described in the *Jim Creek Restoration and Habitat Enhancement Plan* (Golder, 2017) (available upon request).
4. Replant riparian areas up to 25 feet either side of waterbodies according to our Procedures.
5. Compensate for long-term wetland impacts to forested wetlands through the use of the Lummi Nation Mitigation Bank and/or by participating with the Nooksack Indian Tribe and Whatcom County to implement potential mitigation project(s) in the Project area, where appropriate and available.

6. Implement the Fish Exclusion and Relocation Plan (see attachment C) to salvage and relocate fish from aquatic habitats affected by groundwater removal.

7. Northwest offered the opportunity to provide the Nooksack Indian Tribe and Whatcom County some timber for their own purposes as an in-kind mitigation contribution.

8. The Nooksack Indian Tribe suggested that another form of mitigation (besides timber clearing topic discussed above) would be to lower the "sill" at the inlet of Jim Creek to allow more fish passage.

9. All equipment would be washed offsite prior to entering the construction right-of-way to avoid introduction of noxious weeds or nuisance aquatic organisms. Equipment would be inspected for engine and hydraulic fluid leaks and confirmed to be "non-leaking" prior to entering a waterbody or working in the area.

10. To minimize the potential for spills and any impacts from such spills, Northwest's Spill Plan (attachment B) would be implemented. In general, hazardous materials, chemicals, fuels, lubricating oils and concrete-coating activities would be not be stored or occur, nor would refueling operations be conducted within 100 feet of a wetland or waterbody in accordance with our Procedures and Northwest's Spill Plan.

11. Northwest's EI would visually monitor the groundwater, hydrostatic test water and trench dewatering activities to ensure that no erosion occurs or sedimentation enters waterbodies and would ensure that turbid water is not discharged to Waters of the State. If the EI determines that a discharge is entering a waterbody, the receiving water would be visually monitored for turbidity. If turbidity is observed, the dewatering operations would be immediately adjusted/reinstalled/repaired to ensure that the discharge to surface water is halted until water quality standards are met as would be required by WDOE's Section 401 Water Quality Certification and General Construction Stormwater Permit, which Northwest must obtain prior to construction.

12. After construction is complete, Northwest would disable the ELJs that were installed in 2015 by disconnecting metallic connections (removing all-thread rods, lag bolts, and chains) that are readily accessible from the surface by personnel working with hand tools. ELJ materials would become integrated in the Nooksack River Sub-basin by natural hydrologic forces over time.

Cumulative Effects. Cumulative effects associated with the Project are unlikely to affect EFH. Any cumulative impacts associated with other projects planned in the vicinity of the Project would be required to comply with existing or emerging development standards required to protect habitat for fish species. These standards are intended to protect water quality, hydrologic conditions, estuarine shallow water and deepwater habitat conditions.

6.3 EFH Effects Determination

Adverse effects to Pacific Coast Salmon EFH include the direct or indirect physical, chemical or biological alterations of the waters or substrate and loss of, or injury to, benthic organisms, prey species and their habitat, and other ecosystem components, if such modifications

reduce the quality or quantity of EFH. As determined for ESA fish species in the BA, the Project "**may adversely affect**" freshwater Pacific Coast Salmon EFH.

7.0 References

Allen, M., and S. Riley. 2012. Effects of Electrofishing on Adult Frogs. Normandeau Associates, Inc. Arcata, CA.

Anderson, J.W., J.M. Neff, B.A. Cox, H.E. Tatem, and G.M. Hightower. 1974. Characteristics of Dispersions and Water-soluble Extracts of Crude and Refined Oils and their Toxicity to Estuarine Crustaceans and Fish. Marine Biology. 27:75–88.

Antunes-Kenyon, S.E. and G. Kennedy. 2004. A Review of the Toxicity and Environmental Fate of Triclopyr. Massachusetts Department of Agricultural Resources. Website: http://www.mass.gov/agr/pesticides/water/Aquatic/triclopyr_final.pdf.

Arcement, G.J., and V.R. Schneider. 1989. Guide for Selecting Manning's Roughness Coefficients for Natural Channels and Flood Plains. U.S Geological Survey Water-Supply Paper 2339. Website: http://www.fhwa.dot.gov/bridge/wsp2339.pdf.

Bash, J., C. Berman, and S. Bolton, S. 2001. Effects Of Turbidity and Suspended Solids on Salmonids . Report No. WA-RD 526.1, Washington State Department of Transportation, Seattle, Washington.

Beauchamp, D.A., M.F. Shepard, and G.B. Pauley. 1983. Species profiles: life histories and environmental requirements of coastal fishes and invertebrates (Pacific Northwest)—Chinook salmon. U.S. Fish and Wildlife Service, Division of Biological Services, FWS/OBS-82/11.6. U.S. Army Corps of Engineers, TR EL-82-4. 15pp.

Becker, B.H. 2001. Effects of Oceanographic Variation on Marbled Murrelet Diet and Habitat Selection. Ph.D Dissertation. University of California, Berkeley, CA.

Becker, S.A., T. Roussin, W. Jones, E. Krausz, S. Walker, S. Simek, D. Martorello, and A. Aoude. 2016. Washington Gray Wolf Conservation and Management 2015 Annual Report. Pages WA-1 to WA-24 in U.S. Fish and Wildlife Service Rocky Mountain Wolf Program 2015 Annual Report. USFWS, Ecological Services, Helena, Montana.

Bennett, A.F. 1991. Roads, Roadsides, and Wildlife Conservation: A Review. Pages 99-117 in D.A. Saunders and R.J. Hobbs (editors). Nature Conservation 2: The Role of Corridors. Surrey Beatty & Sons, Chipping Norton, Australia.

Berg, L. and T.G. Northcote. 1985. Changes in Territorial, Gill-Flaring, and Feeding Behavior in Juvenile Coho Salmon (*Oncorhynchus kisutch*) Following Short-term Pulses of Suspended Sediment. Canadian Journal of Fisheries and Aquatic Science 42:1410-1417.

Berger, R., L. Bergstrom, E. Graneli, and L. Kautsky. 2004. How Does Eutrophication Affect Different Life Stages of *Fucus vesiculosus* in the Baltic Sea? A Conceptual Model. Hydrobiologia 514:243-248.

Binford, L.C., B.G. Elliott, and S.W. Singer. 1975. Discovery of a Nest and the Downy Young of the Marbled Murrelet. *The Wilson Bulletin* 87:303–440.

Blais, D.P. and D.L. Simpson. 1997. The Effects of a Buried Natural Gas Pipeline on Water Quality, Stream Habitat, and Biotic Populations within High Quality Cold Water Streams in Upstate New York. Pages 433- 441 in J.R. Williams, J.W. Goodrich-Mahoney, J.R. Wisniewski and J. Wisniewski (editors). The Sixth International Symposium on Environmental Concerns in Rights-of-Way Management. Elsevier Science, Ltd., New York, NY.

Bohannon, J.S., D.R. Gay, M.P. Hayes, C.D. Danilson and K.I. Warheit. 2016. Discovery of the Oregon Spotted Frog in the Northern Puget Sound Basin, Washington State. Northwestern Naturalist 97:82-97.

Brown, C.M., R.D. Revel, and J.R. Post. 2002. Effects of Pipeline Rights-of-Way on Fish Habitat at Two Alberta Stream Crossings. Pages 705- 715 in J.W. Goodrich-Mahoney, D.F. Mutrie, and C.A. Guild (editors). The Seventh International Symposium on Environmental Concerns in Rights-of-Way Management. Elsevier Science, Ltd., Boston, MA.

Burger, A.E. 2001. Using radar to estimate populations and assess habitat associations of marbled murrelets. Journal of Wildlife Management 65: 696–715.

Cassidy, K.M. 1991. Washington Gap Project. Land Cover for Washington State. Washington Cooperative Fish and Wildlife Research Unit, University of Washington, Seattle, WA.

Chow, V.T. 1959. Open-Channel Hydraulics. Blackburn Press, Caldwell, New Jersey.

Conservation Northwest. 2016. Wolverine. *Gulo gulo*. Conservation Northwest. Online http://www.conservationnw.org/what-we-do/wildlife-habitat/wolverine

Cushman, K.A., and C.A. Pearl. 2007. A Conservation Assessment for the Oregon Spotted Frog (Rana pretiosa). USDA Forest Service Region 6 and USDI Bureau of Land Management, Oregon and Washington.

Durkin, P. and M. Follansbee. 2003. Picloram - Revised Human Health and Ecological Risk Assessment – Final Report. USDA Forest Service, Arlington, VA.

Durkin, P. and M. Follansbee. 2004. Imazapyr- Human Health and Ecological Risk Assessment – Final Report. USDA Forest Service, Arlington, VA.

Falxa, G.A., M.G. Raphael, C. Strong, J.Baldwin, M. Lance, D. Lynch, S.F. Pearson, and R.D. Young. 2016. Chapter 1: Status and Trend of Marbled Murrelet Population in the Northwest Forest Plan Area. Pages 1-36 in G.A. Falxa and M.G. Raphael (Technical Coordinators). Northwest Forest Plan-The First 20 Years (1994-2013): Status and Trend of Marbled Murrelet Populations and Nesting Habitat. USDA-Forest Service General Technical Report PNW-GTR-933, Portland, Oregon.

Findlay, S. D. Strayer, C. Goumbal, and K. Gould. 1993. Metabolism of Streamwater Dissolved Organic Carbon in the Shallow Hyporheic Zone. Limnology and Oceanography 38(7):1493-1499.

Forman R.T., and L.E. Alexander. 1998. Roads and Their Major Ecological Effects. Annual Review of Ecology and Systematics 29:207-231.

Gallaugher, P. and A.P. Farrel. 1999. Physiological Indicators of Stress of Capture and Mortality Risk in Commercial Non-retention Salmon Fisheries. Unpublished report to Fisheries and Oceans Canada, Simon Fraser University, Burnaby, B.C. Online at: http://www.sfu.ca/cstudies/science/selective/selectivefishing.pdf.

Germaine, S. S. and B. L. Cosentino. 2004. Screening Model for Determining Likelihood of Site Occupancy by Oregon Spotted Frogs (*Rana pretiosa*) in Washington State. Final Report. Washington Department of Fish and Wildlife, Olympia, WA.

Golder Associates. 2017. Jim Creek Restoration and Habitat Enhancement Plan – Basis of Design. Technical Memorandum to Northwest Pipeline LLC. June 29.

Good, T.P., R.S. Waples, and P. Adams (editors). 2005. Updated Status of Federally Listed ESUs of West Coast Salmon and Steelhead. NOAA Technical Meomorandum NMFS-NWFSC-66.

Goldsborough, W.J., and W.M Kemp. 1988. Light Responses of a Submersed Macrophyte - Implications for Survival in Turbid Tidal Waters. Ecology 69: 1775-1786.

Gregory, R.S.. and T.G. Northcote. 1993. Surface, Planktonic, and Benthic Foraging by Juvenile Chinook Salmon (*Oncorhynchus tshawytscha*) in Turbid Laboratory Conditions. Canadian Journal of Fisheries and Aquatic Sciences 50: 233-240.

Hallock, L.. 2013. Draft State of Washington Oregon Spotted Frog Recovery Plan. Washington Department of Fish and Wildlife, Olympia.

Hamer Environmental. 2017 Marbled Murrelet Habitat Assessment for the North Fork Nooksack Project. Unpubished Report for Edge Environmental, Inc. Lakewood, CO.

Harper, K.A., and S.E. Macdonald. 2002. Structure and Composition of Edges Next to Regenerating Clear-cuts in Mixed-wood Boreal Forest. Journal of Vegetation Science 13: 535–546.

Haycock, R.D. 2000. COSEWIC Status Report on the Oregon Spotted Frog *Rana pretiosa* in Canada, in COSEWIC Assessment and Status Report on the Oregon Spotted Frog *Rana pretiosa* in Canada. Committee on the Status of Endangered Wildlife in Canada. Ottawa.

Healey, M.C. 1991. Life History of Chinook Salmon (*Oncorhynchus* tshawytscha). In Pacific *Salmon Life Histories*. British Columbia: UBC Press

Heithecker, T.D. and C.B. Halpern. 2007. Edge-related Gradients in Microclimate in Forest Aggregates Following Structural Retention Harvests in Western Washington. Forest Ecology and Management 248: 163–173.

Howe, C.M., M. Berril, B.D. Pauli, C.C. Helbing, K. Werry, and N. Veldhoen. 2004. Toxicity of Glyphosate-based Pesticides to Four North American Frog Species. *Environmental Toxicology and Chemistry* 23(8): 1928–1938.

Hyatt, T. 2007. Lower North Fork Nooksack River: Reach Assessment and Restoration Recommendations. Nooksack Tribe Natural Resources Department, Deming, WA.

Ingram, J. 2017. Washington Department of Fish and Wildlife, Personal Communication with Northwest Pipeline. February 14, 2017.

Johnson, C.R. 1976. Herbicide Toxicities in Some Australian Anurans and the Effect of Subacute Dosages on Temperature Tolerance. Zool. *Botanical Journal of the Linnean Society* 59 (1): 79–83.

Johnson, D.H., and T.A. O'Neil (managing directors). 2001. Wildlife-Habitat Relationships in Oregon and Washington. Oregon State University Press, Corvallis, Oregon.

Kahlo, R. 2016. Ecologist, The Watershed Company, Kirkland, WA written communication to Edge Environmental, Inc. December 14, 2016.

Kapust, H.Q.W., K.R. McAllister, and M.P. Hayes. 2012. Oregon Spotted Frog (*Rana pretiosa*) Response to Enhancement of Oviposition Habitat Degraded by Invasive Reed Canary Grass (*Phalaris arundinacea*). Herpetological Conservation and Biology 7(3):358-366.

Larsen, T. and W.J. Ripple. 2006. Modeling Gray Wolf (*Canis lupus*) Habitat in the Pacific Northwest, USA. Journal of Conservation Planning 17–33.

Laufle, J.C., G.B. Pauley, and M.F. Shepard. 1986. Species Profiles: Life Histories and Environmental Requirements of Coastal Fishes and Invertebrates (Pacific Northwest) – Coho Salmon. U.S. Fish and Wildlife Service Biological Report 82(11.48), U.S. Army Corps of Engineers, TR EL-82-4.

Leedy, D.L. 1975. Highway-Wildlife Relationships. Volume 1; A State-of-the-Art Report. Report Number FHWA-RD-76-4. Federal Highway Administration, Washington D.C

Leonard, W.P., H.A. Brown, L.L.C. Jones, K.R. McAllister, and R.M Storm. 1993. Amphibians of Washington and Oregon. Seattle Audubon Society, Seattle, Washington.

Limerinos, J.T. 1970. Determination of the Manning Coefficient from Measured Bed Roughness in Natural Channels. Geological Survey Water-Supply Paper 1898-B. U.S. Geological Survey, Washington, D.C.

Lytle, D.A. and B.L. Peckarsky. 2001. Spatial and Temporal Impacts of a Diesel Fuel Spill on Stream Invertebrates. *Freshwater Biology* 46: 693–704.

Mack, E.D., W.P. Ritchie, S.K. Nelson, E. Kuo-Harrison, P. Harrison, and T.E. Hamer. 2003. Methods for Surveying Marbled Murrelets in Forests: a Revised Protocol for Land Management and Research. Pacific Seabird Group Technical Publication Number 2.

Manley, I., R. Shortt, and A.E. Burger. 1992. Marbled Murrelet Activity Patterns in the Carmanah Valley on the southwest coast of Vancouver Island. Pages 71–75 in K. Vermeer, R.W. Butler, and K.H. Morgan (eds.). The Ecology, Status, and Conservation of Marine and Shoreline Birds on the West Coast of Vancouver Island. Occasional Paper No. 75, Canadian Wildlife Service, Pacific and Yukon Region, Delta, British Columbia.

Markarian, R.K., J.P. Nicolette, T. Barber, and L. Giese. 1994. A Critical Review of Toxicity Values and an Evaluation of the Persistence of Petroleum Products for Use in Natural Resource Damage Assessments. American Petroleum Institute Publication Number 4594.

Marshall, D.B. 1988a. The Marbled Murrelet Joins the Old-Growth Forest Conflict. American Birds 42: 202-212.

Marshall, D.B. 1988b. Status of the Marbled Murrelet in North America with a Special Emphasis on Populations in California, Oregon, and Washington. U.S. Fish and Wildlife Service Biological Report 88(30).

Marshall, D.B. 1989. The Marbled Murrelet. Pages 435-455 in Audubon Wildlife Report 1989/1990. Academic Press, Inc. San Diego, CA.

McAllister, K.R. and W.P. Leonard. 1997. Washington State status report of the Oregon spotted frog. Washington Department of Fish and Wildlife. Olympia, Washington.

McCullough, D.A. 1999. A Review and Synthesis of Effects of Alterations to the Water Temperature Regime on Freshwater Life Stages of Salmonids, with Special Reference to Chinook Salmon. Environmental Protection Agency, Region 10. Seattle, WA.

McShane, C., T. Hamer, H. Carter, G. Swartzman, V. Frisen, D. Ainley, R. Tressler, K. Nelson, A. Burger, L. Spear, T. Mohagen, R. Martin, L. Henkel, K. Prindle, C. Strong, and J. Keany. 2004. Evaluation Report for the 5-Year Status Review of the Marbled Murrelet in Washington, Oregon, and California. U.S. Fish and Wildlife Service, Region 1, Portland, OR.

Meager, J.J., P. Domenici, A. Shingles, and A.C. Utne-Palm. 2006. Escape Responses in Juvenile Atlantic Cod (*Gadus morhua*): the Effect of Turbidity and Predator Velocity. Journal of Experimental Biology 209:4174-4184.

Meyer, C.B., S.L. Miller, and C.J. Ralph. In Review (2008). Delay in Response to Forest Fragmentation by the Marbled Murrelet. *Journal of Wildlife Management.*

Miner, J.G., and R.A. Stein. 1996. Detection of Predators and Habitat Choice by Small Bluegills: Effects of Turbidity and Alternative Prey. Transactions of the American Fisheries Society 125: 97-103.

Naslund, N.L. 1993. Why Do Marbled Murrelets Attend Old-Growth Forest Nesting Areas Year-Round? The Auk 110: 594–602.

National Marine Fisheries Service (NMFS). 1997. Magnuson-Stevens Act Provision: Essential Fish Habitat (EFH). Federal Register 62(244):66531-66559.

National Marine Fisheries Service. 1998. Endangered and Threatened Species: Threatened Status for Two ESUs of Steelhead in Washington, Oregon, and California. Federal Register 63(53):13347-13371.

National Marine Fisheries Service. 1999. Endangered and Threatened Species; Threatened Status for Three Chinook Salmon Evolutionarily Significant Units (ESUs) in Washington and Oregon, and Endangered Status for One Chinook Salmon ESU in Washington; Final Rule. Federal Register 64(56):14308-14328.

National Marin Fisheries Service. 2000. Designated Critical Habitat: Critical Habitat for 19 Evolutionarily Significant Units of Salmon and Steelhead in Washington, Oregon, Idaho, and California. Federal Register 65(32):7764-7787.

National Marine Fisheries Service. 2005a. Endangered and Threatened Species; Designation of Critical Habitat for 13 Evolutionarily Significant Units (ESUs) of salmon and steelhead (Onchorhynchus spp.) in Washington, Oregon, and Idaho; Final Rule. Federal Register 70(170): 52630-52858. September.

National Marine Fisheries Service. 2005b. Habitat Areas for the Puget Sound Chinook Salmon ESU; GIS files. August

National Marine Fisheries Service. 2005c. Status Review Update for Puget Sound Steelhead. Northwest Fisheries Science Center, Seattle, Washington.

National Marine Fisheries Service. 2006. Final Supplement to the Shared Strategy's Puget Sound Salmon Recovery Plan. National Marine Fisheries Service, Northwest Region. Seattle, Washington.

National Marine Fisheries Service. 2007a. Puget Sound Salmon Recovery Plan. Submitted by Shared Strategy for Puget Sound, Adopted by National Marine Fisheries Service, January 19, 2007.

National Marine Fisheries Service. 2007b. Endangered and Threatened Species: Final Listing Determination for Puget Sound Steelhead. Federal Register 72(91):26722-26735.

National Marine Fisheries Service. 2011a. 5-Year Review: Summary & Evaluation of Puget Sound Chinook, Hood Canal Summer Chum, Puget Sound Steelhead. National Marine Fisheries Service, Northwest Region, Portland, OR.

National Marine Fisheries Service. 2013. Endangered and Threatened Species; Designation of Critical Habitat for Lower Columbia River Coho Salmon and Puget Sound Steelhead; Proposed Rule. Federal Register 78(9): 2726-2796.

National Marine Fisheries Service. 2014a. Endangered and Threatened Wildlife; Final Rule to Revise the Code of Federal Regulations for Species Under the Jurisdiction of the National Marine Fisheries Service. Federal Register (79) 71: 20802-20817.

National Marine Fisheries. 2014b. Endangered and Threatened Wildlife; Final Rule to Revise the Code of Federal Regulations for Species Under the Jurisdiction of the National Marine Fisheries Service. Federal Register (79) 71: 20802-20817.

National Marine Fisheries Service. 2014c. Endangered and Threatened Species; Designation of Critical Habitat for Lower Columbia River Coho Salmon and Puget Sound Steelhead. Proposed Rule. Federal Register 78(9):2726-2796.

National Marine Fisheries Service. 2016a. Endangered and Threatened Species; Designation of Critical Habitat for Lower Columbia River Coho Salmon and Puget Sound Steelhead; Final Rule. Federal Register 81(36):9252-9325.

National Marine Fisheries Service. 2016b. Endangered and Threatened Species; Designation of Critical Habitat for Lower Columbia River Coho Salmon and Puget Sound Steelhead; Final Rule. Federal Register 81(36): 9252-9325. February

National Marine Fisheries. 2016c. NMFS GIS Data for the 2/14/16 Final Critical Habitat Designation for Puget Sound Steelhead – Designated Areas Only.

Nelson, S.K. and T.E. Hamer. 1995. Nesting success and the effects of predation on marbled murrelets. Pages 89–98 in C.J. Ralph, G.L. Hunt, Jr., M.G. Raphael, and J.F. Piatt (technical editors), *Ecology and Conservation of the Marbled Murrelet*, General Technical Report PSW-GTR-152. Albany, CA. Pacific Northwest Research Station, Forest Service, U.S. Department of Agriculture.

Newcombe, C.P. and J.O.T. Jensen. 1996. Channel Suspended Sediment and Fisheries: A synthesis for Quantitative Assessment of Risk and Impact. *North American Journal of Fisheries Management* 16(4): 693–727.

Nooksack Indian Tribe. 2016. 2016 State of Our Watersheds Report, Nooksack River Basin. Available online: https://geo.nwifc.org/SOW/SOW2016_Report/Nooksack.pdf.

Pacific Fishery Management Council. 1999. Amendment 14 to the Pacific Coast Salmon Plan Appendix A. Identification and Description of Essential Fish Habitat, Adverse Impacts, and Recommended Conservation Measures for Salmon. Pacific Fishery Management Council. Portland, OR.

Pacific Fishery management Council (PFMC). 2016. Pacific Coast Salmon Fishery Management Plan for Commercial and Recreational Salmon Fisheries off the Coasts of Washington, Oregon, and California as Amended through Amendment 19. PFMC, Portland, OR. March. 91 p.

Padgett-Flohr, G.E., and M.P. Hayes. 2011. Assessment of the Vulnerability of the Oregon Spotted Frog (*Rana pretiosa*) to the Amphibian Chytrid Fungus (*Batrachochytrium dendrobatidis*). *Herpetological Conservation and Biology* 6(2): 99–106.

Pauley, G.B., B.M. Bortz, and M.F. Shepard. 1986. Species profiles, Life Histories and Environmental Requirements of Coastal Fishes and Invertebrates (Pacific Northwest) – Steelhead Trout. U.S. Fish and Wildlife Service Biological Report 82(11.62).

Peachey, E., D. Ball, R. Parker, J.P. Yenish, T.W. Miller, D.W. Morishita, and P.J.S. Hutchinson (Compilers). 2007. Pacific Northwest Weed Management Handbook. Oregon State University, Corvallis, Oregon.

Pearl, C.A., J. Bowerman, M.J. Adams, and N.D. Chelgren. 2009. Widespread Occurrence of the Chytrid Fungus *Batrachochytrium dendrobatidis* on Oregon spotted frogs (*Rana pretiosa*). *EcoHealth* 6: 209–218

Pearson, S.F., M..M. Lance, and M.G. Raphael. 2014. Washington 2013 at-sea marbled murrelet population monitoring: Research Progress Report. Washington Department of Fish and Wildlife, Wildlife Science Division and U.S.D.A. Forest Service. Pacific Northwest Research Station, Olympia, Washington.

Puget Sound Indian Tribes and The Washington Department of Fish and Wildlife. 2004. Comprehensive Management Plan for Puget Sound Chinook: Harvest Management Component. March.

Raleigh, R.F., W.J. Miller, and P.C. Nelson. 1986. Habitat suitability index models and instream flow suitability curves: Chinook salmon. U.S. Fish and Wildlife Service Biological Report 82(10.122).

Ralph, C. J., G.L. Hunt Jr. M.G. Raphael, J.F. Piatt. 1995. Overview of the Ecology and Conservation of the Marbled Murrelet in North America. Ecology and Conservation of the Marbled Murrelet. USDA Forest Service, Pacific Southwest Research Station, General Technical Report, PSW-GTR-152.

Rice, S.D., J.W. Short, C.C. Brodersen, T.A. Mecklenburg, D.A. Moles, C.J. Misch, D.L. Cheatham, and J.F. Karinen. 1976. Acute Toxicity and Uptake–Depuration Studies with Cook Inlet Crude Oil, Prudhoe Bay Crude Oil, No. 2 Fuel Oil, and Several Subarctic Marine Organisms. Northwest Fisheries Center Auke Bay Fisheries Laboratory.

Richter, A., and S.A. Kolmes. 2005. Maximum Temperature Limits for Chinook, Coho, and Chum Salmon, and Steelhead Trout in the Pacific Northwest. Reviews in Fisheries Science 13:23-49.

Richter, K.O. and A.L. Azous. 1995. Amphibian occurrence and wetland characteristics in the Puget Sound Basin. Wetlands. Volume 15 (3): 305-312. September.

Ripple, W.J., S.K. Nelson, and E.M. Glenn. 2003. Forest Landscape Patterns around Marbled Murrelet Nest Sites in the Oregon Coast Range. *Northwestern Naturalist* 84: 80–89.

Ruckelshaus, M.H., and N.J. Sands. 2005. Puget Sound Chinook Salmon ESU. Pages 65 to 98 *in* T.P. Good, T.P., R.S. Waples, and P. Adams (editors). Updated Status of Federally Listed ESUs of West Coast Salmon and Steelhead. NOAA Technical Meomorandum NMFS-NWFSC-66.

Ryan, T.J., C.M. Scott, and B.A. Douthitt. 2005. Sub-lethal Effects of 2,4-D Exposure on Golf Course Amphibians. *USGA Turfgrass and Environmental Research Online* 5(16): 1–14.

Sandercock, F.K. 1998. Life History of Coho Salmon (*Oncorhynchus kisutch*). Pages 395 to 445 in C. Groot and L. Margolis (editors). Pacific Salmon Life Histories, University of British Columbia Press. Vancouver.

Shaklee, J. B., J. Ames, and D. Hendrick. 1995. Genetic diversity units and major ancestral lineages for pink salmon in Washington. In C. Busack and J. B. Shaklee (editors), Genetic diversity units and major ancestral lineages of salmonid fishes in Washington. Wash. Dep. Fish Wild. Tech. Rep. RAD 95-02, p. Bl-B37. (Available from Washington Department of Fish and Wildlife, P.O. Box 43151, Olympia, WA 98501.)

Shared Strategy Development Committee. 2007. Puget Sound Salmon Recovery Plan. Shared Strategy for Puget Sound, Seattle, Washington.

Smith, C.J. 2002. Salmon and Steelhead Habitat Limiting Factors in WRIA 1, the Nooksack Basin. Washington State Conservation Commission, Lacey, Washington.

Snyder, D.E. 2003. Electrofishing and Its Harmful Effects on Fish. Information and Technology Report USGS/BRD/ITR-2003-0002. U.S. Government Printing Office. Denver, CO.

Snyder, D.E. 2004. Invited Overview: Conclusions from a Review of Electrofishing and its Harmful Effects on Fish. Reviews in Fish Biology and Fisheries 13:445-453.

Stinson, D. W. 2005. Draft Washington State Status Report for the Mazama Pocket Gopher, Streaked Horned Lark, and Taylor's Checkerspot. Washington Department of Fish and Wildlife, Olympia, Washington. 138+ xii pp.

Stinson, D. W. 2016. Periodic status review for the Streaked Horned Lark in Washington. Washington Department of Fish and Wildlife, Olympia, Washington.

StreamNet. 2012. Fish data for the Northwest. Available online: http://www.streamnet.org/data/interactive-maps-and-gis-data/.

Tonina, D. and J.M. Buffington. 2009. Hyporheic Exchange in Mountain Rivers I: Mechancs and Environmental Effects. Geography Compass 3(3):1063-1086.

Trombulak, S.C., and C.A. Frissell. 2000. Review of Ecological Effects of Roads on Terrestrial and Aquatic Communities. Conservation Biology 14:18-30

Tu, M., C. Hurd, and J.M. Randall. 2001. Weed Control Methods Handbook: Tools and Techniques for Use in Natural Areas. The Nature Conservancy. Davis, California.

U.S. Department of Health and Human Services. 1997. Toxicological Profile for Hydraulic Fluids. U.S. epartment of Health and Human Services, Agency for Toxic Substances and Disease Registry. Atlanta, Georgia.

U.S. Fish and Wildlife Service. 1974. Part – 17 -Endangered Wildlife. Federal Register 39(3):1171–1176.

U.S. Fish and Wildlife Service. 1992. Endangered and Threatened Wildlife and Plants; Determination of Threatened Status for the Washington, Oregon and California Population of the Marbled Murrelet. Federal Register 57(191): 45328-4533.

U.S. Fish and Wildlife Service. 1996. Endangered and Threatened Wildlife and Plants; Final Designation of Critical Habitat for the Marbled Murrelet; Final Rule. Federal Register 61(102): 26256-26320.

U.S. Fish and Wildlife Service. 1997a. Recovery Plan for the Threatened Marbled Murrelet (*Brachyramphus marmoratus*) in Washington, Oregon, and California. Portland, OR.

U.S. Fish and Wildlife Service. 1999. Endangered and Threatened Wildlife and Plants; Determination of Threatened Status for Bull Trout in the Coterminous United States. Final Rule. Federal Register 64(210):58910-58933.

U.S. Fish and Wildlife Service. 2001a. Endangered and Threatened Wildlife and Plants; 12-Month Finding for a Petition to List the Yellow-billed Cuckoo (Coccyzus americanus) in the Western Continental United States. Federal Register 66(143):38611-38626.

U.S. Fish and Wildlife Service. 2001b. Endangered and Threatened Wildlife and Plants; Proposed Rule To List the Dolly Varden as Threatened in Washington Due to Similarity of Appearance to Bull Trout. Federal Register 66(6):1629-1632.

U.S. Fish and Wildlife Service. 2003. Estimates of Distances at Which Incidental Take of Murrelets and Spotted Owls due to Harassment are Anticipated from Sound-Generating, Forest-Management Activities in Olympia National Forest. Lacey, WA.

U.S. Fish and Wildlife Service. 2004. Draft Recovery Plan for the Coastal-Puget Sound Distinct Population Segment of Bull Trout (*Salvelinus confluentus*). Volume I. Puget Sound Management Unit. Portland, Oregon.

U.S. Fish and Wildlife Service. 2005. Endangered and Threatened Wildlife Plants; Designation of Critical Habitat for the Bull Trout; Final Rule. Federal Register 70(185): 56212-56311.

U.S. Fish and Wildlife Service. 2006a. Endangered and Threatened Wildlife and Plants; Designation of Critical Habitat for the Marbled Murrelet; Proposed Rule. Federal Register 71(176):53838-53951

U.S. Fish and Wildlife Service. 2006b. Estimating the Effects of Auditory and Visual Disturbance to Northern Spotted Owls and Marbled Murrelets in Northwestern California. Memorandum 8-14-2006-2887, U.S. Fish and Wildlife Service, Arcata Office, Arcata, California.

U.S. Fish and Wildlife Service. 2007. Yellow-billed Cuckoo, Western Distinct Population Segment. U.S. ish and Wildlife Service, Species Assessment and Listing Priority Assignment Form, Sacramento Field Office, Sacramento, California.

U.S. Fish and Wildlife Service. 2010a. Species Assessment and Listing Priority Assignment Form. *Eremophila alpestris strigata*. U.S. Fish and Wildlife Service, Region 1, Washington Fish and Wildlife Office, Lacey, Washington.

U.S. Fish and Wildlife Service. 2010b. Endangered and Threatened Wildlife and Plants; Revised Designation of Critical Habitat for Bull Trout in the Coterminous United States; Final Rule. Federal Register 75(200): 63898-64070.

U.S. Fish and Wildlife Service. 2011a. Endangered and Threatened Wildlife and Plants; Reissuance of Final Rule To Identify the Northern Rocky Mountain Population of Gray Wolf as a Distinct Population Segment and To Revise the List of Endangered and Threatened Wildlife. Federal Register 76(87):25590–25592.

U.S. Fish and Wilslife Service. 2011b. Yellow-billed Cuckoo. U.S. Fish and Wildlife Service Species Assessment and Listing Priority Assignment Form. Region 8 (California/Nevada Region).

U.S. Fish and Wilslife Service. 2011c. North American Wolverine. U.S. Fish and Wildlife Service Species Assessment and Listing Priority Assignment Form. Region 6 (Mountain-Prairie Region).

U.S. Fish and Wildlife Service. 2011d. Endangered and Threatened Wildlife and Plants; Revised Critical Habitat for the Marbled Murrelet; Final Rule. Federal Register 76(193): 61599–61621.

U.S. Fish and Wildlife Service. 2011e. Oregon Spotted Frog - Species Assessment and Listing Priority Form. U.S. Fish and Wildlife Service, Pacific Region 1

U.S. Fish and Wildlife Service. 2012. Guidance for Identifying Marbled Murrelet Nest Trees in Washington State. U.S. Fish and Wildlife Service, Washington Fish and Wildlife Office (WFWO). Lacey, Washington. April.

U.S. Fish and Wildlife Service. 2013a. ECOS Species Profile: Gray Wolf (*Canis lupus*). Updated December 2013. Website: http://ecos.fws.gov/speciesProfile/profile/speciesProfile.action?spcode=A00D

U.S. Fish and Wildlife Service. 2013b. Endangered and Threatened Wildlife and Plants; Determination of Endangered Status for the Taylor's Checkerspot Butterfly and Threatened Status for the Streaked Horned Lark. Final Rule. Federal Register 78(192):61452–61503.

U.S. Fish and Wildlife Service. 2013c. Endangered and Threatened Wildlife and Plants; Threatened Status for the Distinct Population Segment of the North American Wolverine Occurring in the Contiguous United States; Establishment of a Nonessential Experimental Population of the North American Wolverine in Colorado, Wyoming, and New Mexico; Proposed Rules. Federal Register 78(23):7864-7890.

U.S. Fish and Wildlife Service.. 2013d. Endangered and Threatened Wildlife and Plants; Threatened Status for Oregon Spotted Frog. Proposed Rule. Federal Register 78(168): 53582–53623.

U.S. Fish and Wildlife Service. 2014a. Endangered and Threatened Wildlife and Plants; Determination of Threatened Status for the Western Distinct Population Segment of the Yellow-billed Cuckoo *(Coccyzus americanus);* Final Rule. Federal Register 79(192):59992-60038.

U.S. Fish and Wildlife Service. 2014b. Endangered and Threatened Wildlife and Plants; Designation of Critical Habitat for the Western Distinct Population Segment of the Yellow-Billed Cuckoo; Proposed Rule. Federal Register 79(158):48548-48652.

U.S. Fish and Wildlife Service. 2014c. Endangered and Threatened Wildlife and Plants; Threatened Status for the Distinct Population Segment of the North American Wolverine Occurring in the Contiguous United States; Establishment of a Nonessential Experimental Population of the North American Wolverine in Colorado, Wyoming, and New Mexico. Federal Register 79(156):47522-47545.

U.S. Fish and Wildlife Service. 2014d. Endangered and Threatened Wildlife and Plants; Threatened Status for Oregon Spotted Frog. Final Rule. Federal Register 79(168):51657 -51710

U.S. Fish and Wildlife Service. 2015a. Recovery plan for the coterminous United States population of bull trout (*Salvelinus confluentus*). Portland, Oregon. Available online: https://ecos.fws.gov/docs/recovery_plan/Final_Bull_Trout_Recovery_Plan_092915-corrected.pdf

U.S. Fish and Wildlife Service. 2015b. Coastal Recovery Unit Implementation Plan for Bull Trout (*Salvelinus confluentus*). Prepared by U.S. Fish and Wildlife Service: Washington Fish and Wildlife Office, Lacey, Washington and Oregon Fish and Wildlife Office, Portland, Oregon.

September. Available online: https://ecos.fws.gov/docs/recovery_plan/Final_Coastal_RUIP_092915_1.pdf.

U.S. Fish and Wildlife Service. 2016a. Information for Planning and Conservation. Species List for the North Fork Nooksack Project, Whatcom County, Washington. Generated November 2. 2016.

U.S. Fish and Wildlife Service. 2016b. Endangered and Threatened Wildlife and Plants; Proposed Rule for the North American Wolverine. Federal Register 81(201):71670-71671.

U.S. Fish and Wildlife Service. 2016c. Endangered and Threatened Wildlife and Plants; Designation of Critical Habitat for the Oregon Spotted Frog; Final Rule. Federal Register 81(91):29336-29396.

Valett, H.M., S.G. Fisher, and E.H. Stanley. 1990. Physical and Chemical Characteristics of the Hyporheic Zone of a Sonoran Desert Stream. Journal of the North American Benthological Society 9(3):201-215.

Vogel, J.L., and D.A. Beauchamp. 1999. Effects of Light, Prey Size, and Turbidity on Reaction Distances of Lake Trout (*Salvelinus namaycush*) to Salmonid Prey. Canadian Journal of Fisheries and Aquatic Sciences 56:1293-1297.

Washington Department of Ecology. 2011. Waters Requiring Supplemental Spawning and Incubation Protection for Salmonid Species. Washington State Department of Ecology, Water Quality Program. Publication Number 06-10-038. January.

Washington Department of Ecology. 2016. Washington State's Water Quality Assessment and 303(d) list. http://www.ecy.wa.gov/programs/wq/303d/currentassessmt.html. Accessed in February 2017.

Washington Department of Ecology. 2017. Water Quality Monitoring Station 01A120 – Nooksack R @ No Cedarville. River and Stream Water Quality Monitoring. data available at https://fortress.wa.gov/ecy/eap/riverwq/station.asp?theyear=&tab=temperature&scrolly=535&wria=01&sta=01A120

Washington Department of Fish and Wildlife. 2000. Bull Trout and Dolly Varden Management Plan. Washington Department of Fish Wildlife, Fish Program., Olympia, WA.

Washington Department of Fish and Wildlife. 2009. Draft Environmental Impact Statement for the Wolf Conservation and Management Plan for Washington. Washington Department of Fish and Wildlife, Olympia, WA.

Washington Department of Fish and Wildlife. 2010a. Priority Habitats and Species Program. Fish and Wildlife Geographic Information System Standard Digital Data. Database Output for Northwest Pipeline, GP. Battleground, Washington.

Washington Department of Fish and Wildlife. 2012. Wolverine (*Gulo gulo*). Candidate Species 2012 Annual Report. Washington Department of Fish and Wildlife, Olympia, WA.

Washington Department of Fish and Wildlife. 2014. Hatchery and Genetic Management Plan (HGMP), Kendall Creek Winter Steelhead. Washington Department of Fish and Wildlife, Olympia, WA. Available online: http://wdfw.wa.gov/hatcheries/hgmp/pdf/puget_sound/kendall_early_winter_steelhead__for_re-submission_7_28_2014.pdf. July.

Washington Department of Fish and Wildlife. 2015. 2015 Game status and trend report.Wildlife Program, Washington Department of Fish and Wildlife, Olympia, Washington.

Washington Department of Fish and Wildlife. 2016a. Wolf Observations. Online at http://wdfw.wa.gov/conservation/gray_wolf/reporting/sightings.html

Washington Department of Fish and Wildlife. 2016b. Periodic Status Review for the Marbled Murrelet in Washington. October. Available online: http://wdfw.wa.gov/commission/meetings/2016/11/nov0416_5_summary_murrelet.pdf.

Washington Department of Fish and Wildlife. 2016c. Salmon Conservation and Reporting Engine (SCoRE). Available online: https://fortress.wa.gov/dfw/score/score/

Washington Department of Fish and Wildlife. 2016d. SalmonScape. Available online: http://apps.wdfw.wa.gov/salmonscape/. Accessed October 3, 2016.

Washington Department of Fish and Wildlife. 2017. State Listed Species: Revised February 2017. Available online: wdfw.wa.gov/conservation/endangered/state_listed_species.pdf.

Washington Department of Natural Resources. 1997. Final Habitat Conservation Plan. Washington Department of Natural Resources, Olympia, Washington.

Washington State Department of Transportation. 2011a. Chapter 7.0-Construction Noise Impact Assessment. Pages 7.1 - 7.62 in Biological Assessment Preparation for Transportation Projects, Advanced Training Manual Version 02-2011. Environmental Services, Washington State Department of Transportation, Olympia, WA.

Washington State Department of Transportation. 2011b. Herbicide Use. Roadside Maintenance. Accessed online: http://www.wsdot.wa.gov/Maintenance/Roadside/

Washington State Department of Transportation. 2015. 2015 Annual Traffic Report. Available online: http://www.wsdot.wa.gov/mapsdata/travel/pdf/Annual_Traffic_Report_2015.pdf.

Watershed Company, The. 2016a. Northwest Pipeline, LLC North Fork Nooksack River Line Lowering Project – Habitat Assessment Report. The Watershed Company, Kirkland, WA.

Watershed Company, The. 2016b. Northwest Pipeline, LLC North Fork Nooksack River Line Lowering Project – Delineation Report. The Watershed Company, Kirkland, WA.

Watershed Company, The. 2017. Oregon Spotted Frog Habitat Analysis. The Watershed Company, Kirkland, WA.

Weitkamp, L.A., T.C. Wainwright, G.J. Bryant, G.B. Milner, D.J. Teel, R.G. Kope, and R.S. Waples. 1995. Status Review of Coho Salmon from Washington, Oregon, and California. NOAA Technical Memorandum NMFS-NWFSC-24.

Williams, R.W., R.M. Laramie, J.J. Ames. 1975. A Catalog of Washington Streams and Salmon Utilization. Volume 1, Puget Sound Region. Washington Department of Fisheries, Olympia, WA

World Health Organization. 1996. Environmental Health Criteria 171 – Diesel Fuel And Exhaust Emissions. United Nations Environment Programme, International Labour Organisation, World Health Organization. Available Online at: http://www.inchem.org/documents/ehc/ehc/ehc171.htm

WRIA 1 Salmon Recovery Board. 2005. Appendix D – WRIA 1Salmonid Periodicity Chart, WRIA 1 Salmonid Recovery Plan. Adopted from Anchor Environmental, LLC 2003. Fish Periodicity in WRIA 1. January 2003 draft. Prepared for City of Bellingham Public Works Department. Available online: http://salmon.wria1.org/webfm_send/27

Wydoski, R.S., and R.R. Whitney. 1979. Inland Fishes of Washington. University of Washington Press, Seattle, Washington.

ATTACHMENT A

EROSION CONTROL AND REVEGETATION PLAN

Northwest Pipeline LLC

Erosion Control and Revegetation Plan (ECRP)

North Fork Nooksack Line Lowering Project

April 2017

Table of Contents

1.0 Introduction ... 1
1.1 Project Components ... 1
1.2 Schedule ... 1
2.0 Site Description ... 1
2.1 Existing Site Conditions ... 1
2.2 Proposed Pipeline Construction Activities ... 2
2.2.1 Pre-Construction Survey ... 2
2.2.2 Clearing and Grading ... 3
2.2.3 Installation of Erosion Control BMPs ... 3
2.2.4 Topsoil Segregation ... 3
2.2.5 Installation of the Groundwater Management/Dewatering Program; ... 4
2.2.6 Trenching, 26-inch and 30-inch Pipeline Removal and Installation of 30-inch Replacement Pipeline ... 4
2.2.7 Hydrostatic Testing ... 4
2.2.8 Restoration ... 5
3.0 Best Management Practices ... 5
3.1 Temporary Erosion Control Procedures ... 6
3.1.1 Construction Ingress and Egress ... 6
3.1.2 Sediment Barriers ... 6
3.1.3 Temporary Run-off Controls ... 7
3.1.4 Mulch ... 7
3.1.5 Erosion Control Fabric ... 8
3.1.6 Waterbody Crossings ... 8
3.1.7 Wetland Crossings ... 9
3.1.8 Spill Prevention and Equipment Fueling and Maintenance ... 9
3.1.9 Material Delivery and Storage ... 10
3.2 Permanent Erosion Control Measures ... 10
3.2.1 Trench Breakers ... 10
3.2.2 Permanent Slope Breakers, Interceptor Dikes or Swales ... 10
4.0 Maintenance and Periodic Evaluation ... 10
5.0 Groundwater Management/Dewatering Program and Hydrostatic Test Water and Dewatering ... 11
5.1 Groundwater Management/Dewatering Program ... 11
5.2 Hydrostatic Testing ... 11
5.3 Trench Dewatering ... 11
5.4 Hydrostatic and Trench Water Discharge ... 11
6.0 Non-Stormwater Discharges ... 12
7.0 Restoration and Revegetation ... 12
7.1 Recontouring ... 12
7.2 Construction Debris Disposal ... 12
7.3 Soil Compaction ... 12
7.4 Scarification ... 12
7.5 Soil Replacement ... 13
7.6 Rock Removal ... 13
7.7 Seedbed Preparation ... 13
7.8 Fertilization ... 14
7.9 Seed Mixtures and Supplemental Plantings ... 14
7.10 Seeding Timing ... 15
7.11 Seeding Methods ... 15
7.12 Supplemental Wetland and Riparian Plantings ... 16
7.13 Mulch ... 17
7.14 Noxious Weeds ... 17
7.15 Maintenance ... 18
8.0 References ... 19

List of Tables

Table 7.9-1 Recommended Seed Mixtures....14
Table 7.12-1 Native Shrub and Tree Plantings for Restoring Riparian Areas 16

List of Attachments

Attachment A FERC's Upland Erosion Control, Revegetation, and Maintenance Plan
Attachment B FERC's Wetland and Waterbody Construction and Mitigation Procedures
Attachment C BMP Typicals

List of Acronyms and Abbreviations

AIP	abandoned in place
AMSL	above mean sea level
BMP	best management practice
CWF	certified weed free
DOT	U.S. Department of Transportation
ECRP	Erosion Control and Revegetation Plan
EI	Environmental Inspector
FERC	Federal Energy Regulatory Commission
HPA	Hydraulic Project Approval
MP	milepost
NF Nooksack	North Fork of the Nooksack River
Northwest	Northwest Pipeline LLC
NRCS	Natural Resource Conservation Service
OHWM	ordinary high water mark
Project	North Fork Nooksack Line Lowering Project
Spill Plan	Spill Plan for Oil and Hazardous Materials
TEWA	temporary extra work area
WDFW	Washington Department of Fish and Wildlife
WDNR	Washington Department of Natural Resources
WRCC	Western Regional Climate Center

1.0 INTRODUCTION

This Erosion Control and Revegetation Plan (ECRP or Plan) outlines the erosion control and revegetation procedures that Northwest Pipeline LLC (Northwest) will utilize during construction of the North Fork Nooksack Line Lowering Project (Project) in Whatcom County, Washington to minimize erosion and sedimentation and enhance revegetation success on all lands affected by the Project. The revegetation measures outlined in this ECRP have been prescribed to stabilize disturbed areas and to revegetate the right-of-way to a condition which supports the preconstruction land uses as quickly as possible following construction.

This Plan was developed using the Federal Energy Regulatory Commission's (FERC's) Upland Erosion Control, Revegetation, and Maintenance Plan (Upland Plan) and FERC's Wetland and Waterbody Construction and Mitigation Procedures (Wetland and Waterbody Procedures) (see Attachments A and B). FERC's Upland Plan and Wetland and Waterbody Procedures have been developed specifically for linear pipeline projects with the intent to minimize the extent and duration of project-related disturbance and to minimize erosion and enhance revegetation success. The Upland Plan and Wetland and Waterbody Procedures were developed through a public process which included input from state, federal, and local agencies, industry, and the general public. In addition, the ECRP incorporates recommendations provided by the Natural Resource Conservation Service (NRCS) to prevent, to the maximum extent practical, the transport of sediment from the Project site to drainage facilities, water resources, and adjacent properties.

1.1 Project Components

Pipeline activities proposed for the Project include the lowering by replacement of approximately 1,700 feet of 30-inch pipeline and the removal of approximately 1,550 feet of previously abandoned in place (AIP) 26-inch pipeline, which will become exposed during the replacement of the 30-inch pipeline. The 30-inch pipeline will be replaced in the north floodplain of the North Fork of the Nooksack River (NF Nooksack) between milepost (MPs) 1468.46 and 1468.78.

1.2 Schedule

Northwest proposes to conduct clearing activities as early as fall of 2018 and construct in 2019 during the driest months of the year (May to late-September), followed by restoration. The Project is expected to take 14 to 17 weeks to complete. The proposed schedule will minimize environmental effects and facilitate construction. The schedule will allow most surface-disturbing construction activities (i.e., clearing, grading, trenching and pipe removal/replacement operations) and most restoration to occur primarily within the dry season.

2.0 SITE DESCRIPTION

2.1 Existing Site Conditions

The Project is located on the northwestern edge of the North Cascades Lowland Forests Ecoregion. This ecoregion is composed of low mountains, broad glaciated valleys and glacial-fed rivers that receive, on average, 60 to 90 inches of precipitation per year. The Project is situated in a nearly level glacial terrace of the NF Nooksack floodplain, surrounded by forested riparian lowlands and pastures.

The climate of the Project area is greatly tempered by air masses from the Pacific Ocean which influence the climate throughout the year. Summers are fairly warm with average temperatures

around 60°F; hot days are rare (maximum temperature is approximately 73°F). Winters are cool with average temperatures around 40°F; snow and freezing temperatures are not common. During summer, rainfall is light and several weeks often pass without precipitation. During the rest of the year rains are frequent, especially in late fall and winter (Western Regional Climate Center [WRCC], 2016a). According to the WRCC, the prevailing wind is from the south. Average wind speed is highest (eight to ten miles per hour) in the winter (WRCC, 2016b).

The Project will affect 8 waterbody and 4 jurisdictional wetland systems. Of the 8 waterbodies affected, 6 are intermittent. All of the intermittent waterbodies are expected to be dry at the time of construction. Construction will occur immediately adjacent to the NF Nooksack.

2.2 Proposed Pipeline Construction Activities

The Project will be designed, constructed, operated, and maintained in accordance with the U.S. Department of Transportation (DOT) regulations in 49 CFR Part 192, *"Transportation of Natural and Other Gas by Pipeline: Minimum Federal Safety Standards;*" 18 CFR Part 2.6, "*Guidelines to be Followed by Natural Gas Pipeline Companies in the Planning, Clearing, and Maintenance of Rights-of-Way and the Construction of Aboveground Facilities;*" and other applicable federal, state and local regulations. In addition to the DOT requirements, Northwest will also construct and reclaim the Project area in accordance with FERC's Upland Plan (see Attachment A) and FERC's Wetland and Waterbody Procedures (see Attachment B).

Pipeline construction and restoration are primarily scheduled during an approximate 14- to 17-week period between June and September. Northwest will prepare to receive construction related materials and pipe in the spring of 2019. Reclamation will occur during the late summer or early fall of 2019. The general construction sequence is as follows, with each sequence described in more detail in the following sections:

- Pre-Construction Survey;
- Clearing and Grading;
- Installation of Erosion Control Best Management Practices (BMPs);
- Topsoil Segregation;
- Groundwater Management/Dewatering Program;
- Trenching, 26-inch and 30-inch Pipeline Removal and Installation of 30-inch Replacement Pipeline and Backfilling;
- Hydrostatic Testing; and
- Restoration.

2.2.1 Pre-Construction Survey

The limits of disturbance will be clearly marked/staked prior to construction (i.e., the construction right-of-way, temporary extra work areas [TEWAs] and the access road). Sensitive areas to be protected from disturbance will be marked with brightly colored flagging or construction fence for equipment operators. These areas will also be shown on the Environmental Alignment Sheet and presented during pre-construction environmental training. Equipment will only be allowed to enter and operate within the delineated limits of disturbance and along the designated access road. Flagging, signs and other markings identifying the limits of disturbance will be maintained throughout all phases of construction and routinely checked by Northwest's Environmental Inspector (EI) (see Section 3.0 for the EI's responsibilities). The 75-85-foot wide existing permanent easement will be the construction right-of-way. TEWAs will also be required for equipment and material staging, topsoil and subsoil storage (including timber and slash), and to install and maintain the groundwater management/dewatering system. The location of the

Project area within the NF Nooksack floodplain, which supports extensive wetland and waterbody features, together with the Project's engineering and construction requirements, limits Northwest's ability to comply with FERC's Upland Plan and FERC's Wetland and Waterbody Procedures. Consequently, Northwest is requesting FERC's approval of the modifications described in Resource Report 1.

2.2.2 Clearing and Grading

The flagged limits of disturbance will be maintained throughout all construction phases and will be monitored by Northwest's EI. Brush and trees within the construction right-of-way and TEWAs will be felled or sheared so as to prevent damage to adjacent trees and structures and in upland areas will be felled away from wetlands and waterbodies, to the maximum extent practical. Any debris entering a waterbody as a result of felling and yarding of timber will be removed as soon as practical after entry into the waterbody. Any logs firmly embedded in the bed or bank of waterbodies that are in place prior to felling and yarding of timber will not be disturbed, unless they prevent construction activities. Any existing logs that are required to be removed from waterbodies will be returned to the waterbody after construction. Logs and slash will not be yarded across Washington Department of Natural Resources (WDNR) Type F streams (all waterbodies affected by the Project). Logs and slash will not be stored in wetlands and, where feasible, logs will be yarded out of wetlands or riparian areas. The logs will be transported to minimize damage to adjacent trees and vegetation, where possible. All clearing operations near waterbodies will follow conditions specified in the Project's Hydraulic Project Approval (HPA) issued by the Washington Department of Fish and Wildlife (WDFW) and the Forest Practices approvals issued by WDNR.

No vegetation will be cleared outside the certificated construction right-of-way and TEWAs. Grading of the construction right-of-way in upland areas will be limited to the minimum required to provide a safe working area necessary to construct the Project. Vegetation in wetlands outside of the trench will be cut off at ground level, leaving existing root systems in place. Pulling of tree stumps and grading activities will be limited to directly over the trench. Northwest will not grade or remove stumps or root systems from the rest of the construction right-of-way or TEWAs in wetlands unless it is determined that safety-related construction constraints require removal of tree stumps from under the working side of the construction right-of-way. Minimizing stump and root system removal will accelerate restoration efforts by allowing sprouting species to reestablish from existing root systems.

2.2.3 Installation of Erosion Control BMPs

On recent Northwest projects, temporary erosion control measures have been installed immediately after clearing and prior to grading (initial soil disturbance). Installation of temporary erosion control measures prior to clearing is ineffective because the brush must be cleared to allow installation and because the BMPs are frequently damaged or removed by the clearing activities and must be re-installed. All erosion control devices will be routinely inspected and any damaged or temporarily removed structures will be replaced at the end of each working day. Temporary erosion control measures will be maintained until successful revegetation has been achieved. Section 3.1 describes in detail the temporary erosion control procedures that will be implemented during Project construction to minimize potential impacts from erosion and sedimentation.

2.2.4 Topsoil Segregation

The potential mixing of topsoil with subsoil from construction activities could result in a loss of fertility of the soil. To prevent mixing of the soil horizons or incorporation of excess rock into the

topsoil, topsoil segregation will be performed. FERC's Upland Plan requires topsoil segregation in 1) all residential areas; 2) actively cultivated or rotated agricultural lands; 3) pastures and hayfields; and 4) other areas at the landowner's request. In these areas, FERC's Upland Plan requires either full construction right-of-way or trench and subsoil storage area stripping. Although the pipeline replacement activities in upland areas will not occur within the land use types that require topsoil segregation, Northwest will salvage topsoil over the trench, where possible, to facilitate revegetation success. Topsoil will not be salvaged from the spoil storage area to avoid cutting additional riparian and forested wetland vegetation. Segregated topsoil will be stockpiled separately from subsoil in accordance with FERC's Upland Plan. In deep soils (more than 12 inches of topsoil), Northwest will segregate at least 12 inches of topsoil. In soils with less than 12 inches of topsoil, Northwest will make every reasonable effort to segregate the entire topsoil layer, as determined by Northwest's EI.

FERC's Wetland and Waterbody Procedures address topsoiling in wetlands. In wetland areas, FERC generally requires 12 inches over the trench to be salvaged, except in areas where standing water or saturated soils are present. Areas where topsoil segregation will occur are shown on the Environmental Alignment Sheet.

2.2.5 Groundwater Management/Dewatering Program

As described in Section 5.0, to allow for a safe and efficient trenching operation within the NF Nooksack floodplain, where shallow groundwater levels exist, a significant dewatering program will be required. This program is considered an important BMP to minimize potential sedimentation by allowing Jim Creek to be crossed in the dry. In addition, by temporarily lowering groundwater levels in the immediate Project area, soil saturation should be reduced, minimizing potential soil impacts associated with rutting, mixing and soil compaction (see Section 5.0 for more details).

2.2.6 Trenching, 26-inch and 30-inch Pipeline Removal and Installation of 30-inch Replacement Pipeline and Backfilling

Northwest will excavate a single trench to allow removal of the existing pipelines and installation of the new pipe. After installation of the 30-inch replacement pipeline and prior to backfilling, Northwest will not install trench plugs because of the presence of high groundwater levels in the NF Nooksack floodplain and the coarse, pervious substrate characteristics. Installation of trench plugs in the trench is not necessary to maintain wetland hydrology nor to avoid draining wetlands in the Project area. As specified in Resource Report 1, Northwest has requested a modification from FERC's Wetland and Waterbody Procedures regarding installation of trench plugs (see Section VI.C.1). The pipeline will be backfilled with the native materials excavated from the trench. Care will be taken to prevent any large rocks from rolling down on/against the concrete coated pipe prior to its being bedded with appropriate material. No foreign substance, including skids, welding rods, containers, brush, trees or refuse of any kind will be permitted in the backfill.

2.2.7 Hydrostatic Testing

The pipeline will be hydrostatically tested in accordance with DOT regulations to ensure that the system is capable of operating at the design pressure as described in Section 5.0 of this Plan. Should a leak occur, the line would be repaired and retested until the pressure test specifications are achieved. Hydrostatic test water will be discharged in a manner to prevent erosion from scour and to prevent sedimentation of adjacent wetlands or waterbodies. The test water will be discharged into a structure to dissipate energy and to allow sheet flow as described in Section 5.0.

2.2.8 Restoration

After the pipeline is backfilled and tested, disturbed areas will be restored, as closely as possible, to their original contours. Permanent erosion control measures will be installed as discussed in Section 3.2 of this Plan and revegetation will be performed as outlined in Section 7.0.

3.0 BEST MANAGEMENT PRACTICES

This Plan will be used by contractors as a primary construction reference for the Project. It provides site-specific directions for installing temporary and permanent erosion control measures (e.g., BMPs) to prevent or minimize erosion. Attachment C provides drawings of typical BMPs that may be used during construction. BMP materials will be stored on-site.

Northwest will employ one EI for the Project. The EI will be on site during active construction and will have peer status with all other activity inspectors. The EI will have authority to stop activities that violate the measures set forth in this Plan or that fail to comply with conditions of other authorizations and will have the authority to order corrective action. At a minimum, the EI will be responsible for:

- Ensuring compliance with the measures set forth in this Plan, the requirements of FERC's Upland Plan and Wetland and Waterbody Procedures, and all other environmental permits and approvals, as well as environmental requirements in landowner agreements;
- Identifying, documenting and overseeing corrective actions, as necessary to bring an activity back into compliance;
- Verifying that the limits of authorized construction work areas and locations of access roads are properly marked before clearing and grading;
- Verifying the location of signs and highly visible flagging marking the boundaries of sensitive resource areas, waterbodies, wetlands or areas with special requirements within the construction work area;
- Identifying erosion/sediment control and stabilization needs in all areas;
- Locating dewatering structures and devices to ensure they will not direct water into unauthorized areas;
- Verifying that trench dewatering activities are located such that water is allowed to infiltrate whenever possible, turbid water does not reach waters of the State and dewatering does not result in the deposition of sand, silt and/or sediment in these waters. If such deposition is occurring, the dewatering activity will be adjusted and corrective action taken to prevent reoccurrence;
- Testing subsoil and topsoil in pastures to measure compaction and determining the need for corrective action;
- Advising the Chief Inspector when conditions (such as wet weather) make it advisable to restrict construction activities to avoid excessive rutting;

- Ensuring restoration of contours and topsoil;
- Determining the need for and ensuring that erosion controls are properly installed, as necessary, to prevent sediment flow into wetlands, waterbodies, sensitive areas and onto roads. This would include evaluating controls prior to a predicted storm event whenever possible and installing additional measures as needed to control stormwater and sediment;
- Inspecting and ensuring the maintenance of temporary erosion control measures at least daily in areas of active construction or equipment operation, on a weekly basis in areas with no construction or equipment operation, and within 24 hours of each 0.5 inch or greater of rainfall. Inspections will be recorded and records maintained for review upon request.
- Ensuring the repair of all ineffective temporary erosion control measures as soon as possible but not longer than 24 hours of identification;
- Keeping records of compliance with conditions of all environmental permits and approvals (including the measures set forth in this Plan) during active construction and restoration; and
- Identifying areas that should be given special attention to ensure stabilization and restoration after the construction phase.

3.1 Temporary Erosion Control Procedures

Temporary erosion controls will be installed immediately after initial disturbance (clearing) and will be properly maintained throughout construction and reinstalled as necessary until replaced by permanent erosion controls or until restoration is complete. Near waterbodies and wetlands, it will be determined in the field by the EI if it is necessary to install temporary erosion control measures (i.e., sediment barriers) prior to initial disturbance to minimize the potential for sediment to enter a wetland or waterbody.

3.1.1 Construction Ingress and Egress

Construction traffic will move up and down the construction right-of-way and between TEWAs as necessary. Northwest has identified one private road to provide access for light duty vehicles to the south end of the construction right-of-way. This road is shown on the Environmental Alignment Sheet.

In designated areas, as determined by the EI, Northwest will install construction entrances at access points to TEWAs that intersect paved roads to reduce sediment transport onto the roadway. A typical drawing of a construction entrance access pad is provided on Figure 1 in Attachment C.

3.1.2 Sediment Barriers

Sediment barriers will be used to confine sediment to the construction right-of-way and TEWAs and will be constructed of silt fence, certified weed free (CWF) straw bales or CWF straw wattles (see Figure 2 in Attachment C). Generally, silt fence will be used where sediment barriers are required parallel to the construction right-of-way and TEWAs. Straw bales will generally be used in locations where sediment barriers are required to cross the construction right-of-way along the travel lane such as at waterbody and wetland crossings. Straw wattles may be used in appropriate areas as determined by the EI to reduce run-off velocity and confine sediment to the construction right-of-way and TEWAs (see Figure 3). Northwest may also use

slash generated during clearing operations as slash-filter windrows along the edge of the TEWAs to filter run-off and to minimize potential offsite sedimentation (see Figure 4). Sediment barriers would generally be placed as follows:

- at wetland and waterbody crossings where sediment could flow from the construction right-of-way or TEWAs into a wetland or waterbody;
- adjacent to wetland and waterbody crossings, as necessary, to prevent sediment flow in the wetland consistent with the requirements of FERC's Wetland and Waterbody Procedures.

An example of sediment control in ditches and swales is shown on Figures 5 and 6 in Attachment C. An example of sediment barrier installations during construction at wetlands is shown on Figure 7 in Attachment C. Northwest's EI will determine where it may be necessary to provide added protection using sediment barriers to ensure that run-off is properly treated and that sediment is properly contained on the construction right-of-way and TEWAs.

The EI will inspect temporary erosion control structures at least on a daily basis. The EI will be responsible for ensuring that ineffective temporary erosion control measures are repaired as soon as possible but no more than 24 hours after discovery. Whenever possible, the EI will inspect erosion control measures in advance of predicted storm events and take preventative measures to minimize the potential for off right-of-way sedimentation.

Temporary sediment barriers will be maintained in place until permanent revegetation measures are successful or until the upland areas adjacent to wetlands, waterbodies or roads are stabilized. The structures will be removed once the area has been successfully stabilized.

3.1.3 Temporary Run-off Controls

Interception of surface water reduces the possibility of run-on and run-off. Interceptor dikes and swales may be used to intercept storm run-off from undisturbed areas above disturbed areas or slopes and convey the run-off to stable points away from exposed soils. Stormwater run-off entering the construction right-of-way or TEWAs will be controlled to minimize erosion of disturbed areas and exposed cuts and fills. The EI will determine appropriate run-off control measures depending on site-specific and anticipated weather conditions. Potential control measures may include berms or interceptor dikes, swales and piped slope drains as shown on Figure 8 (see Attachment C).

3.1.4 Mulch

Although not expected, if it becomes necessary to delay final cleanup, including final grading and installation of permanent erosion control measures (based on the modification requested in Resource Report 1), Northwest will apply mulch on all disturbed areas before seeding (FERC's Upland Plan IV. F.3.C.). Mulch will also be applied if construction and restoration activities are interrupted for extended periods. In these areas mulch will be applied uniformly over the area to cover the ground surface at a rate of two tons/acre of CWF straw or hay or its equivalent. The mulch will consist of CWF straw or wood fiber hydromulch.

Construction is scheduled to occur in the dry season; however, if in the wet season (October 1 to May 31) an area were to remain unworked for more than two consecutive days, the area would be covered or appropriate BMPs installed to minimize erosion potential based on soil type, slope gradient, anticipated weather conditions or other factors. The installation of BMPs, as determined by the EI, would retain sediment on site or treat/filter run-off before it leaves the construction right-of-way or TEWAs. BMPs may include berms or sediment barriers. Temporary

coverings may include straw or hydromulch materials or the application of plastic or tarps (see Figure 9 in Attachment C).

3.1.5 Erosion Control Fabric

Northwest will install erosion control fabric (such as jute or excelsior) on stream banks at the time of recontouring (see Figure 10 in Attachment C). The fabric will be anchored using staples or other appropriate devices. The erosion control fabric to be used on stream banks will be designed for the proposed use and will be approved by the EI.

3.1.6 Waterbody Crossings

Seven of the affected waterbodies may be crossed by temporary bridges to provide construction ingress/egress. One waterbody (Jim Creek-Stream D) will be crossed by the trench in the area where the 30-inch pipeline will be replaced to an elevation of 215 feet above mean sea level (AMSL). The NF Nooksack ordinary high water mark (OHWM) abuts the south end of the Project. Jim Creek will be crossed using a dry open cut crossing method in conjunction with the Project's Groundwater Management/Dewatering Program and consistent with the requirements of federal, state and local agencies. Northwest has requested modifications from FERC where a TEWA setback from a wetland or waterbody could not be maintained based on engineering and site-specific conditions (see Resource Report 1).

If water is present in any of the waterbody streambeds at the time of construction, Northwest will utilize temporary construction bridges to cross the waterbodies. FERC's Wetland and Waterbody Procedures (see Section V.B.5.a) allow clearing equipment and equipment necessary for installation of the temporary bridges to cross waterbodies prior to bridge installation.

The temporary equipment bridges will be installed to maintain unrestricted flow and to prevent soil from entering the waterbody. Soil will not be used to stabilize equipment bridges. Bridges will be designed according to FERC's Wetland and Waterbody Procedures (Section V.B.5.B) and will be maintained to withstand and pass the highest flow expected to occur while a bridge is in place. To provide equipment and material access to the construction right-of-way, it will be necessary to install and leave equipment bridges in place during the entire construction period for the Project. Bridges will be designed to span the entire OHWM and will be properly maintained throughout construction.

The temporary bridges may include:

- equipment mats and culvert(s);
- equipment mats or railroad car bridges without culverts;
- clean rock fill and culvert(s); and
- flexi-float or portable bridges.

Northwest may utilize other alternatives for equipment bridges that achieve the same performance and objective. Figure 11 in Attachment C shows a typical of a temporary bridge crossing. Bridges will be removed as soon as possible after permanent seeding. If there will be more than one month between final cleanup and the beginning of permanent seeding and reasonable alternative access to the disturbed work areas is available, equipment bridges will be removed as soon as possible after final cleanup.

Sediment barriers will be installed immediately after initial disturbance of the waterbody or adjacent upland. Sediment barriers will be properly maintained throughout construction and reinstalled as necessary (such as after backfilling the trench) until replaced by permanent erosion controls or until restoration of adjacent upland areas is complete and revegetation has stabilized the disturbed areas.

During restoration, waterbody banks will be returned to preconstruction contours and erosion control matting will be installed as directed by the EI (see Figure 10 in Attachment C). For Jim Creek, the current stabilization measures at the existing pipeline crossing include a grade control along the downstream end of the crossing that maintains the minimum available cover over the pipelines, with stabilization along the banks including a rock toe, coir cloth lifts and native vegetation plantings. Jim Creek restoration will serve to re-establish the current bed and bank contours with largely native materials. Since the 30-inch will be lowered and the 26-inch removed, the existing rock grade-control and rock toe will not be re-established. The bank stabilization design will include woody debris at the toe with coir cloth lifts and native vegetation extending up the banks across the entire width of the crossing.

3.1.7 Wetland Crossings

All wetlands will be crossed in accordance with FERC's Wetland and Waterbody Procedures. Figures 7 and 11 in Attachment C shows the typical wetland crossing methods that will be utilized. Wetlands crossed or that are in close proximity to the Project are shown on the Environmental Alignment Sheet.

Sediment barriers will be installed immediately after initial disturbance (clearing) of the wetland or adjacent upland. Sediment barriers will be properly maintained throughout construction and reinstalled as necessary (such as after backfilling of the trench). Where necessary, sediment barriers will be installed across the entire construction right-of-way and TEWAs along the wetland boundary to prevent sediment flow into the wetland. Where wetlands are adjacent to the construction right-of-way, sediment barriers will be installed along the edge of the construction–right-of-way, as necessary, to prevent sediment flow into the wetland. These sediment barriers will be removed after restoration is complete and revegetation has stabilized the disturbed areas.

In wetlands, where standing water or saturated soils are present, or if construction equipment would cause ruts or mixing of the topsoil and subsoil in wetlands, Northwest will use low-ground-weight construction equipment or will operate normal equipment on timber riprap or standard prefabricated equipment mats. Equipment mats are comprised of wood and serve to distribute the weight of equipment. Rocks, soil imported from outside the wetland, tree stumps or brush riprap will not be used to support equipment on the construction right-of-way. All materials utilized to support equipment on the construction right-of-way will be removed after construction.

Northwest has requested modifications from FERC’s Wetland and Waterbody Procedures (see Table 1.6-1 in Resource Report 1) for TEWAs located within or within 50 feet of wetlands or waterbodies and areas where the construction right-of-way is greater than 75 feet wide.

3.1.8 Spill Prevention and Equipment Fueling and Maintenance

Northwest has developed a Spill Plan for Oil and Hazardous Materials (Spill Plan) that describes measures to prevent and control any inadvertent spill of hazardous materials such as fuels, lubricants and solvents that could contaminate soils and affect water quality. The Spill Plan will

be updated with site-specific information prior to construction. All Project employees will receive Spill Plan training.

Equipment fueling and storage of oil, fuel or other materials near waterbodies or wetlands could create a soil contamination and water quality impact if a spill were to occur. Leaks from equipment and vehicles could also cause impacts to surface waters. Vehicle fueling and maintenance and equipment storage will take place along the entire construction right-of-way and TEWAs; however, certain areas are restricted from these activities. Hazardous materials, chemicals, fuels and lubricating oils will be stored in upland areas at least 100 feet from waterbodies and wetlands in accordance with FERC's Wetland and Waterbody Procedures. Restricted areas for storage of these materials will be clearly marked in the field. Concrete coating, concrete truck washing, refueling and equipment maintenance activities will also be conducted according to FERC's Wetland and Waterbody Procedures. All hazardous materials will be handled in accordance with the Spill Plan. If an unanticipated spill occurs during construction, Northwest would implement the procedures outlined in the Spill Plan.

3.1.9 Material Delivery and Storage

Northwest will use TEWAs for the Project for material delivery and storage. Materials will be brought onto the construction right-of-way as they are needed and will be located away from waterbodies and wetlands. Secondary containment will be provided for liquids.

3.2 Permanent Erosion Control Measures

Permanent erosion control measures that will be used to reduce pollutants in stormwater discharges will be implemented after construction is completed. Post-construction BMPs consist of permanent features and operational practices designed to minimize pollutant discharges, including sediment, from the site.

3.2.1 Trench Breakers

Because of the high groundwater levels in the NF Nooksack floodplain and the coarse, pervious substrate characteristics, installation of trench plugs in the trench is not necessary to maintain wetland hydrology or to avoid draining wetlands in the Project area. Therefore, Northwest has requested a modification from FERC’s Wetland and Waterbody Procedures (see Section VI.C.1).

3.2.2 Permanent Slope Breakers, Interceptor Dikes or Swales

Because of the level topography within the floodplain, slope breakers will not be required. However, during restoration, interceptor dikes or swales (see Section 3.1.3/Run-off Controls), may be installed at appropriate locations, as directed by the EI (see Figure 8 in Attachment C).

4.0 MAINTENANCE AND PERIODIC EVALUATION

Erosion control structures will be maintained in accordance with FERC's Upland Plan. The EI will inspect temporary erosion control structures daily. The EI will be responsible for ensuring that ineffective temporary erosion control measures are repaired within 24 hours of discovery. Whenever possible, the EI will evaluate erosion control measures prior to a predicted storm event and implement measures needed to prevent off right-of-way sedimentation. Inspections will be documented and made available for agency review upon request.

The EI will notify Project construction crews when poor weather conditions prevail and when to initiate adequate precautionary measures. The EI will ensure that the contractor has adequate equipment, materials and crews available to respond rapidly to storm events. It is the responsibility of the EI to advise the Chief Inspector when wet weather or other conditions make it advisable to restrict construction activities to avoid excessive rutting in sensitive areas.

5.0 GROUNDWATER MANAGEMENT/DEWATERING PROGRAM AND HYDROSTATIC TEST WATER AND DEWATERING

5.1 Groundwater Management/Dewatering Program

As described in Resource Report 1, to allow for safe and efficient trenching operations within the NF Nooksack floodplain, a significant dewatering program will be required to address shallow groundwater levels. Water from the well point system will be directed to a dewatering structure located off the edge of the TEWA for surface discharge and infiltration. The well point water will be cold, clear filtered groundwater that may be discharged directly or indirectly into the Jim Creek system or to the NF Nooksack. Water will be discharged at a rate to prevent scour, erosion and sedimentation. It may be necessary to treat (e.g., filtering, aeration etc.) the water before it is discharged to surface waters. The EI along with the construction contractor will select an appropriate location and size for the discharge structure. A typical discharge structure is shown on Figure 12 in Attachment C.

5.2 Hydrostatic Testing

The pipeline will be hydrostatically tested in accordance with DOT regulations to ensure that the pipeline is capable of safely operating at design pressure. Should a leak occur, the pipeline would be repaired and retested until the pressure test specifications are achieved. Hydrostatic test water will be obtained from the well point system installed for the Groundwater Management/Dewatering Program and will not be withdrawn from surface waters.

5.3 Trench Dewatering

During pipeline removal and replacement activities, water that seeps into the trench will be pumped out as necessary to ensure safe access for personnel to the trench. Trench dewatering activities will be conducted in a manner to minimize turbidity (see Figure 13 in Attachment C).

5.4 Hydrostatic and Trench Water Discharge

No hydrostatic test water or water from trench dewatering will be discharged directly to waterbodies. Water will be directed to an energy dissipation structure to prevent erosion and avoid sedimentation (see Figures 12 and 13 in Attachment C). The discharge will occur to an appropriately sized dewatering structure based on the expected quantity of water to be discharged. The structure will be located in a well-vegetated area to promote infiltration and to ensure that sedimentation of wetlands, waterbodies or other sensitive areas does not occur. Northwest's EI will visually monitor the release of hydrostatic test water and trench dewatering activities to ensure that erosion or sedimentation does not occur. In addition, the EI will ensure that turbid water is not discharged to waters of the State. If the EI determines that a discharge is occurring, the receiving water will be visually monitored for turbidity. If turbidity is observed in waters of the State, the dewatering operations would be immediately adjusted to ensure that turbid discharge to surface water is stopped and water quality standards are not exceeded.

6.0 NON-STORMWATER DISCHARGES

The main non-stormwater discharges associated with construction of the pipeline are trench dewatering and hydrostatic test water discharge. The BMPs to minimize potential effects associated with hydrostatic test water discharge are described in Section 5.0.

7.0 RESTORATION AND REVEGETATION

Initial reclamation of disturbed areas will begin as soon as possible after construction. Affected waterbodies will be stabilized and temporary sediment barriers in accordance with FERC's Wetland and Waterbody Procedures (Section V.C.2). The atypical nature of the Project (i.e., extensive excavation, groundwater management and limited access) will not allow compliance with the 20-day requirement. Northwest will maintain temporary erosion controls until final cleanup is completed (see modification request in Resource Report 1). During final clean-up and initial reclamation, permanent repairs of fences, gates and/or drainage ditches removed or damaged during construction will be completed.

7.1 Recontouring

All graded areas associated with pipeline construction will be regraded and contoured to blend into the surrounding landscape and to reestablish natural drainage patterns and wetland hydrology. Emphasis during recontouring will be to return the entire construction right-of-way and TEWAs to their approximate original contours, to stabilize slopes, control surface drainage and to provide an aesthetic appearance. All surface and stormwater run-off from the Project will be discharged to a natural location and not diverted in a manner that would create an adverse impact to adjacent properties.

Ruts and other scars will be filled and all drainage ditches will be returned to their preconstruction condition. Recontouring to the original grade in disturbed wetlands is especially critical so that the wetland hydrology is not altered.

7.2 Construction Debris Disposal

During final cleanup, all construction debris (e.g., timber, slash, mats, garbage, drilling fluids, excess rock, etc.) will be cleared from the construction right-of-way and TEWAs and disposed of in accordance with state and local regulations.

7.3 Soil Compaction

Northwest will test for soil compaction in the pastures utilized for TEWAs. Tests will be conducted on the same soil type under similar moisture conditions in adjacent undisturbed areas as specified in Section V.C.1. in FERC's Upland Plan. Pursuant to FERC's Upland Plan, the EI will be responsible for conducting subsoil and topsoil compaction testing and determining corrective measures.

7.4 Scarification

Prior to respreading the topsoil, the construction right-of-way and TEWAs will be scarified (where necessary as determined by the EI) by ripping or chiseling to loosen compacted areas from equipment traffic. Scarifying the subsoil will also promote water infiltration and improve soil aeration, root penetration and revegetation success.

Where compaction is evident, and if deemed necessary, scarification will occur in disturbed areas, even if vegetation was only mowed or driven over. Scarification will be at least 12 inches deep with rippers spaced not more than 16 inches apart, unless approved by the EI. Ripping and chisel plowing will also occur when materials are dry to promote the shattering of compacted layers.

Equipment mats will be utilized in wetlands where soils are saturated, or where standing water is present, to stabilize these areas and minimize compaction. Therefore, the need for scarification in wetland areas will be determined by the EI. Scarification will not be conducted in wetlands where it may adversely affect the wetland hydrology.

7.5 Soil Replacement

All salvaged topsoil will be uniformly spread over the portions of the construction right-of-way from where the soil was salvaged. If compaction occurs during this operation that might not be relieved during seedbed preparation, all compacted areas will be scarified. Topsoil spreading will not occur during wet periods when soils are easily compacted and all travel over retopsoiled areas will be restricted.

7.6 Rock Removal

FERC's Upland Plan requires the removal of excess rock from the top 12 inches of soil to the extent practicable in hayfields and pastures and other areas at the landowner’s request. In these areas, Northwest will clean up excess rock to a condition similar to adjacent portions of the construction right-of-way (e.g., size, density and distribution of rock) unless the landowner and Northwest negotiate and document other requirements. The rock collected from these operations will be disposed of in upland areas within the certified construction limits, with approval of the landowner. Approval for the use of alternate disposal locations would be requested from FERC.

7.7 Seedbed Preparation

Seedbed preparation will be conducted immediately prior to seeding to prepare a firm seedbed conducive to proper seed placement and moisture retention. Seedbed preparation will also be performed to break up surface crusts and to eliminate weeds which may have developed between initial reclamation and seeding.

A seedbed will be prepared in disturbed areas, where necessary, to a depth of three to four inches using appropriate equipment to provide a seedbed that is firm, yet rough. A rough seedbed is conducive to capturing or lodging seed when broadcasted or hydroseeded, and it reduces run-off and erosion potential. The rough seedbed will retain soil moisture for seedling germination and establishment.

In most areas, final construction right-of-way and TEWA cleanup procedures should be sufficient because it leaves a surface smooth enough to accommodate a drill seeder pulled by a farm tractor and rough enough to catch broadcasted seed and trap moisture and run-off. However, additional preparation, if determined necessary by the EI, such as chisel plowing or disking may be necessary to prepare an adequate seedbed.

7.8 Fertilization

Northwest will use a standard fertilization rate of 200 pounds per acre bulk triple-16 fertilizer (16:16:16 - nitrogen, potassium, and phosphorus) on all disturbed areas to be reseeded, except in wetlands. This fertilization rate will apply 32 pounds per acre of elemental nitrogen, potassium, and phosphorus. The NRCS (2017) agreed with the proposed fertilization rate, which has been used on previous Northwest projects in western Washington, including the Project area. Where fertilizer is applied by broadcast methods, the fertilizer will be incorporated into the top 2 inches of soil. Where the fertilizer is applied by hydroseeding, the fertilizer will be applied with the hydroseeding slurry. The NRCS did not recommend the addition of lime or other soil pH modifiers.

7.9 Seed Mixtures and Supplemental Plantings

As required by FERC's Upland Plan, Northwest has consulted with the NRCS (2017) regarding recommended seed mixtures for the Project area. The NRCS reviewed the proposed seed mixtures and provided recommendations which have been incorporated into Table 7.9-1. The NRCS indicated that the seeding rates should be based on a targeted number of seeds per square foot for critical area plantings and provided an Excel Seeding Rate Calculator, which assumes a 90 percent PLS (seed germination x seed purity). The applications rates for the seed mixtures in Table 7.9-1 are based on the NRCS recommendations. All seed will be tested within 12 months of use. The seed will be free of noxious weeds and the quantity of total weed seed will be low. The EI will review all seed tags prior to use to ensure that these procedures are implemented. The seeding rates specified in Seed Mixtures 1, 2 and 3 are based on drill seeding methods. If hydroseeding occurs, the seeding rate will be used plus any adjustment the hydroseeding company recommends based on their equipment specifications. If broadcast seeding is conducted, the seeding rate will be doubled. Individual landowners may also specify specific seed mixtures for their properties.

Table 7.9-1
Recommended Seed Mixtures[1]

Seed Mixture 1 – Upland Right-of-Way Areas, Wet Pastures and Disturbed Emergent Wetlands		
Common Name	***Scientific Name***	**lbs/ac**
Perennial Grasses		
Redtop or Colonial bentgrass	*Agrostis alba or Agrostis capillaris*	4.0
Fescue, Fine or Creeping Red	*Festuca rubra*	5
Fescue, Tall	*Festuca arundinacea*	15
Orchardgrass	*Dactylis glomerata*	6
Ryegrass, Annual or Italian	*Lolium multiflorum*	12
Timothy	*Phleum pratense*	2
Legumes		
Clover, Red	*Trifolium pratense*	4
Clover, White	*Trifolium repens*	4
Trefoil, Big	*Lotus uliginosus*	1
Annual Cereal Grains		
Oats	*Avena sativa*	20
	lbs/acre	**73 [2]**
Seed Mixture 2 - Pasture Mix – Upland Sites		
Common Name	***Scientific Name***	**lbs/ac**

Perennial Grasses		
Fescue, Tall	Festuca arundinacea	10
Orchardgrass	*Dactylis glomerate*	13
Ryegrass, Perennial or English [5]	*Lolium perenne*	22
Legumes		
Clover, Red	*Trifolium pratense*	5
Clover, White	*Trifolium repens*	3
	lbs/acre	**53** [3]
Seed Mixture 3 – Wetland Seed Mixture		
Grasses		
Ryegrass, Annual	*Lolium multiflorum*	25
Quick Guard [6]		45
Red Fescue [7]	*Festuca rubra*	8
Hairgrass, Tufted [7]	*Deschampsia caespitosa*	3
Bluejoint reedgrass [7]	*Calamagrostis canadensis*	3
Western Mannagrass [7]	*Glyceria occidentalis*	3
Barley, Meadow [7]	*Hordeum Brachyantherum*	10
Legumes		
Clover, Crimson	*Trifolium incarnatum*	8
	lbs/acre	**105** [4]

[1] Specified seed mixtures application rates are based on a targeted 300 to 600 seeds per square foot for critical area plantings depending on seed size, as recommended by the NRCS for critical area plantings. The rate assumes a PLS of 90 percent (seed germination x seed purity) for each species. If PLS is less than 90%, either increase seeding rate by difference or use a different seed lot.
[2] The seeding rate calculates to ~500 seeds/sq ft/acre. The mixture includes both small to large seed sizes.
[3] The seeding rate calculates to ~500 seeds/sq ft/acre. The mixture includes both small to large seed sizes.
[4] Quick Guard is a sterile hybrid of wheat and rye.
[5] These species will be included in the seed mixture if they are readily available from a commercial seed supplier. The Native Seed Network (http://www.nativeseednetwork.org/index) provides a source to search for seed availability and vendors. Native seed should be from west of Cascades sources where available. Northwest will approve final seed mixture and substitutes.

7.10 Seeding Timing

Disturbed areas will be seeded within six working days of final grading, weather and soil conditions permitting. It is expected that seeding of all disturbed areas may begin as early as mid-August and will proceed through the end of September until all areas have been reseeded. The application and maintenance of mulch are critical for winter seeding. Seeding past October 10 will require mulching and may not germinate to provide an effective cover, unless the weather is unseasonably warm.

7.11 Seeding Methods

Seeding will be conducted using either a seed drill, broadcast or hydroseeding according to the guidelines in FERC's Upland Plan. Where broadcast seeding occurs, other than hydroseeding, the seeded area will be lightly dragged with chains or other appropriate harrows to lightly cover the seed. Fertilizer and mulch will not be used in wetlands.

7.12 Supplemental Wetland and Riparian Plantings

To mitigate impacts to riparian areas, Northwest will plant native shrubs and trees in areas where these species existed prior to construction or to enhance existing conditions where landowners allow. Table 7.12-1 provides a list of suggested native trees and shrubs that are common in the Project area in these habitats and which will be planted after final restoration and cleanup during appropriate planting periods (during the winter and early spring). To complete the restoration plantings, Northwest will select a local restoration contractor who is knowledgeable about wetland and riparian ecosystems as well as with the species' characteristics and site growth requirements (see Table 7.12-1). The shrubs and trees planted at each site will be determined at the time of planting based on the moisture regimes and site-specific conditions and based on the plant spacing provided in Table 7.12-1. Adjacent to waterbodies, trees and shrubs will be planted across the existing maintained easement for a width of 25 feet from either bank and will be maintained according to FERC's Wetland and Waterbody Procedures. Northwest has developed a Wetland and Waterbody Mitigation Plan detailing restoration efforts (see Appendix 2C to Resource Report 2).

Table 7.12-1
Native Shrub and Tree Plantings for Restoring Riparian Areas

Common Name	Scientific Name	Planting size [1]	Plant Spacing [2]
SHRUBS			
Wet Sites			
Red-osier dogwood	*Cornus stolonifera*	36" cuttings	3'
Willow spp	*Salix spp.*	36" cuttings [3]	3'
Moist Sites			
Indian Plum	*Oemleria cerasiformis*	1 gal or bare root	6'
Red elderberry	*Sambucus racemosa*	1 gal	8'
Vine maple	*Acer circinatum*	1 gal	8'
Salmonberry	*Rubus spectabilis*	1 gal	4'
Nootka rose	*Rosa nutkana/*	1 gal	4'
Dry Sites			
Snowberry	*Symphoricarpos albus*	1 gal	4'
Vine maple	*Acer circinatum*	1 gal	8'
Beaked hazelnut	*Corylus cornuta*	1 gal	8'
TREES			
Wet Sites			
Red alder	*Alnus rubra*	1 gal	10'
Sitka spruce	*Picea sitchensis*	2 gal or bare root	15'
Western red cedar	*Thuja plicata*	2 gal or bare root	12'
Moist Sites			
Black cottonwood	*Populus balsamifera ssp. trichocarpo*	36" cuttings or poles	10'
Cascara buckthorn	*Frangula purshiana*	1 gal	8'
Western hemlock	*Tsuga heterophylla*	1 gal	12'
Dry Sites			
Douglas' fir	*Pseudotsuga menziesii*	1 gal or bare root	12'
Big-leaf maple	*Acer macrophyllum*	2 gal	15'

[1] Planting stock sizes may include bare root equivalents.
[2] Shrubs will be installed in clusters of 5 to 10, while trees will be individual specimens.
[3] The NRCS (2017) noted in areas of reed canarygrass infestations longer whips can be used, up to 8-feet in length, to outcompete the grass. Willow stakes should be planted/driven in to be in contact with groundwater. The NRCS also noted if the cuttings are from older planting stock, the thicker bark of this planting stock will aid in minimizing rodent damage/girdling.

7.13 Mulch

Mulch will be applied where necessary to stabilize the soil. The mulch will be uniformly applied at a rate of 2 tons/acre to cover at least 75 percent of the ground surface. If seeding occurs shortly before the beginning of the wet season (after mid-September), all disturbed areas will be mulched. Mulching will occur during seeding (where hydroseeded) or immediately after seeding where broadcast or drill seeding occurs. All straw utilized for mulch will be CWF. Anchoring straw mulch by crimping the mulch in is not expected to be necessary because strong winds, which could dislodge the mulch, typically occur during the winter rainy season when the moist conditions will bind the straw to the soils; however, the EI will determine if straw crimping is appropriate.

7.14 Noxious Weeds

The NRCS (2017) was consulted for recommendations to prevent the introduction or spread of noxious weeds and soil pests. The NRCS has recommended that the best way to control the establishment of invasive species is to plant desirable vegetation at relatively high rates so they provide vigorous competition. In addition, Northwest will include the following measures to ensure that the potential spread of noxious weeds is minimized.

- Prior to transporting to the construction right-of-way and TEWAs, all equipment will be inspected to ensure it is clean and free of potential weed seed or sources (i.e., soil roots or rhizomes). All equipment hauled into Whatcom County will be cleaned before entering the County. Inspection of all equipment and trucks used on the Project to ensure they are clean will be the responsibility of the EI or Northwest's authorized representative.

- CWF straw will be used for mulch and sediment barriers, dewatering structures, or other uses along the right-of-way or TEWAs. The EI will be responsible to ensure that all straw hauled to authorized work areas is CWF. The State of Washington Noxious Weed Control Board [1] has a Weed Free Hay and Mulch Program, which is run by the Washington State Department of Agriculture (WSDA) Plant Services Program; producers of certified hay and mulch are listed at the following web site http://www.nwcb.wa.gov/washington-weed-free-hay-and-mulch-program or http://agr.wa.gov/PlantsInsects/WWHAM/WWHAM.aspx.

- Prior to clearing, the Project will be surveyed for areas that may be infested with priority noxious weeds that are listed on the County's priority noxious weed list and require control[2].. The county weed list includes all Class A weeds on the state noxious weed list, all Class B weeds designated by the state for control in the county, and any additional Class B or C weeds that are designated by the county weed board for required control in the county. Surveys will be conducted by Northwest's EI prior to construction. Infested areas would be cleared in a manner to minimize transport of weed seed, roots and rhizomes or other vegetative materials and soil down the construction right-of-way or within TEWAs. Based on various field surveys conducted for the Project in 2016, the only listed weed observed in the Project area that will require treatment is Japanese knotweed (*Polygonum cuspidatum*), which was observed within the construction right-of-way along the banks of Jim Creek and along the north bank of the NF Nooksack.

[1] http://www.nwcb.wa.gov/FAQs/weed-free.htm
[2] http://www.whatcomcounty.us/923/Current-Weed-List

- The NRCS (2017) recommended that prior to construction, knotweed be pre-treated with herbicides to minimize its spread from construction and restoration activities. Herbicide pretreatment is most effective in the late summer with glyphosate. Where herbicide use is necessary to control Japanese knotweed within 100 feet of a waterbody, herbicides formulated for aquatic settings as well as a licensed applicator will be required[3].

- In areas where Japanese knotweed infestations have been identified or noted in the field, to prevent the knotweed from flowering and going to seed and potentially being spread by construction vehicles, plant shoots will be mowed or cut and all plant material removed and disposed of appropriately. Plant clumps will also be grubbed out where discovered to prevent new colonies from establishing. Root systems will be removed, if possible, since re-sprouting can occur from rhizomes and plant fragments left in the ground or can regenerate and spread infestations. The Contractor will remove and appropriately dispose of plant clumps and roots. Salvaged topsoil will be stockpiled adjacent to the area from which they are stripped to eliminate the transport of soil-born noxious weed seeds, roots or rhizomes. During reclamation, the Contractor will return topsoil and vegetative material, as closely as possible, to the areas from which they were stripped. Any clearing equipment used in areas of county-listed weeds will be cleaned by hand or blown down with air prior to leaving the sites. Infested areas will be mapped to aid in monitoring during operations so that the weeds would be controlled.

- During restoration, where weed control is necessary, Northwest will employ mechanical methods (mowing, etc.) to prevent flowering and the spread of weeds or will employ a licensed contractor to ensure that the appropriate herbicides are utilized for the targeted weed species during the proper phenological period at the specified rate. Where mowing occurs to control infestation, these operations would be conducted in a manner to ensure that cut plant materials are not spread along the restoration areas. The contractor will ensure that the herbicides are used according to the labeling restrictions and according to all applicable laws and restrictions. The contractor will confirm that the herbicides are used under the proper seasonal and weather conditions to ensure effectiveness and to minimize drift to non-targeted areas. Herbicides will not be applied during precipitation events or when precipitation is expected within 24 hours or as specified on the label. Herbicides will not be used within 100 feet of a wetland or waterbody, unless allowed by the appropriate agency. Prior to herbicide application, Northwest and/or their contractor will obtain all required permits from the local jurisdictions/authorities.

7.15 Monitoring and Maintenance

Northwest will conduct follow-up inspections of all disturbed areas after the first and second growing seasons, or as required by Project permits, to determine the success of revegetation. Revegetation shall be considered successful in upland areas if upon visual survey the density and cover of non-nuisance vegetation are similar in density and cover to adjacent undisturbed lands. If vegetative cover and density are not similar or there are excessive weeds after two full growing seasons, Northwest will continue revegetation efforts until revegetation is successful. Repair of erosion control structures will occur until the construction right-of-way and TEWAs have successfully revegetated and has stabilized. Once the site is stabilized, temporary erosion control measures will be removed.

[3] http://www.whatcomcounty.us/DocumentCenter/View/2491

In wetland areas, revegetation will be considered successful if the affected wetland satisfies the current federal definition for a wetland (i.e., soils, hydrology, and vegetation); vegetation is at least 80 percent of either the cover documented for the wetland prior to construction, or at least 80 percent of the cover in adjacent wetland areas that were not disturbed by construction; and invasive species and noxious weeds are absent, unless they are abundant in adjacent areas that were not disturbed by construction. If revegetation is not successful at the end of 3 years, Northwest will develop and implement (in consultation with a professional wetland ecologist) a remedial revegetation plan to actively revegetate the wetland and will continue revegetation efforts until wetland revegetation is successful.

Routine vegetation maintenance clearing over the full width of the existing maintained easement shall not be done more frequently than every 3 years.

Northwest will test, operate and maintain the proposed Project facilities in accordance with 49 CFR Part 192 and other applicable federal and state regulations. All pipeline facilities will be marked and identified in accordance with applicable regulations to avoid accidental excavation.

8.0 REFERENCES

Natural Resource Conservation Service, 2017. Web Soil Survey. http://websoilsurvey.nrcs.usda.gov/app/HomePage.htm.

National Resource Conservation Service. 2017. Personal Communication with Edge Environmental, Inc. March.

Western Regional Climate Center. 2016a. Monthly Climate Summary for Bellingham 2N, Washington (450564). Accessed at: http://www.wrcc.dri.edu/cgi-bin/cliMAIN.pl?wa0564. January.

Western Regional Climate Center. 2016b. Average Wind Speeds, Bellingham AP, Washington. Accessed at: http://www.wrcc.dri.edu/climatedata/climtables/westwind/#WASHINGTON. January.

ATTACHMENT A

FERC's Upland Erosion Control, Revegetation, and Maintenance Plan

Not Included

ATTACHMENT B

FERC's Wetland and Waterbody Construction and Mitigation Procedures

Not Included

ATTACHMENT C

BMP Typicals

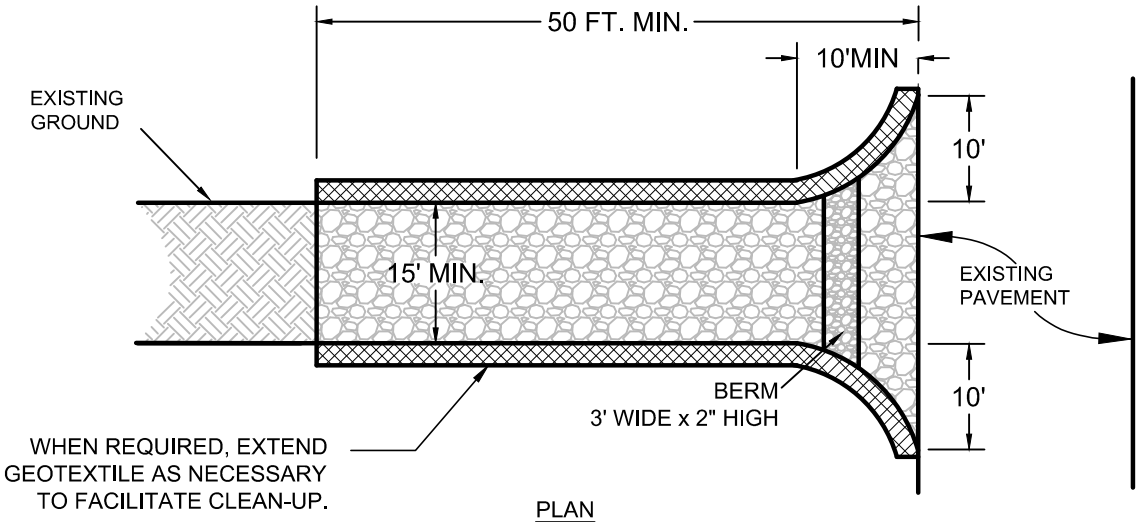

PLAN

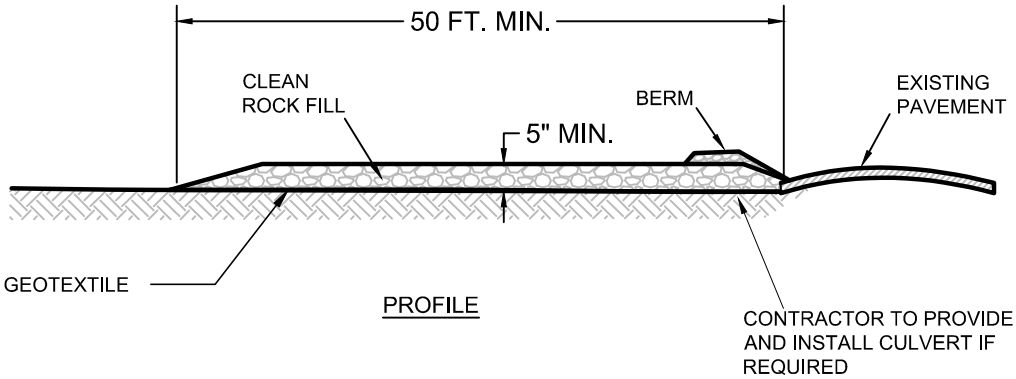

PROFILE

NOTES:

1. Access pads are to be installed adjacent to paved roads identified on the Alignment Sheets or upon Williams' request.
2. Geotextile (3 oz/yd woven geotextile or equivalent) shall be installed beneath the rock fill. Rock fill will be 2" - 6" crushed ballast rock.
3. The berm shall be of the same material as the access pad.
4. Silt fence will be installed along the sides of the access pad if necessary to prevent sedimentation onto adjacent areas.
5. Contractor shall keep road surface in safe driving condition. Sediment tracked onto the road will be immediately removed by shoveling or sweeping and disposed of appropriately.
6. Should the rock pad become ineffective for reducing the buildup of mud and dirt and minimizing tracking onto the road, the Contractor shall wash the existing rockfill surface or add a rockfill layer to the access pad.
7. Upon completion of reclamation, Contractor shall remove all rock fill, geotextile, debris and the culvert (if installed) unless otherwise directed by Williams.

REFERENCE DRAWINGS	
DRAWING NO.	TITLE

ACCESS ROAD ENTRANCE / EXIT

EE

FIGURE 1

Williams WEST

REVISIONS						
NO.	DATE	BY	DESCRIPTION	W.O. NO.	CHK.	APP.

DRAWN BY: EE	DATE: 4-3-2017	ISSUED FOR BID:	SCALE: NONE
CHECKED BY:	DATE:	ISSUED FOR CONSTRUCTION:	
APPROVED BY:	DATE:	DRAWING NUMBER: STD-A-2-5001	SHEET 1 OF 1

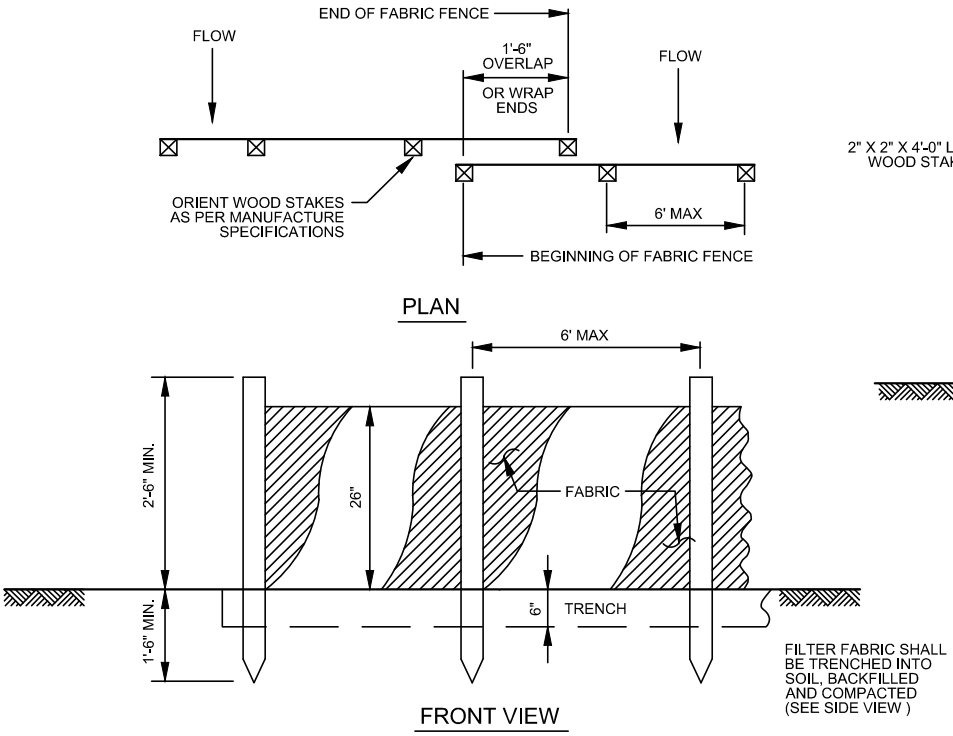

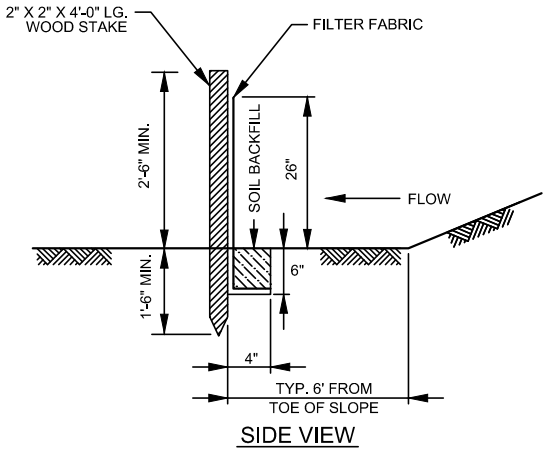

NOTES:

1. SILT FENCE MATERIAL SHALL COMPLY WITH ASTM D6461 - 99(2007)E2 STANDARD SPECIFICATION FOR SILT FENCE MATERIALS.
2. INSTALLATION PROCEDURES SHALL COMPLY WITH ASTM D6462 - 03(2008) STANDARD PRACTICE FOR SILT FENCE INSTALLATION AND MANUFACTURE SPECIFICATIONS.
3. INSTALL FILTER FABRIC AFTER VEGETATION CLEARING AND IMMEDIATELY AFTER SOIL DISTURBANCE.
4. AT A MINIMUM, INSTALL AND MAINTAIN TEMPORARY SEDIMENT BARRIER AT THE BASE OF SLOPES > 5% WHERE THE BASE OF THE SLOPE IS < 50 FEET FROM WATERBODY, WETLAND OR ROAD CROSSING.
5. FOLLOWING PROPER INSTALLATION OF FABRIC, TRENCH SHALL BE BACKFILLED AND RUBBER-TIRE COMPACTED TO WILLIAM'S SATISFACTION.
6. INSPECT DAILY AND REMOVE SEDIMENT ACCUMULATION 30% IN HEIGHT.
7. INSTALLATIONS SHALL BE PERIODICALLY CHECKED ACCORDING TO FERC'S PLAN AND PROCEDURES, AND IF FLOW IS OBSTRUCTED BUILD-UP OF SEDIMENT SHALL BE REMOVED.
8. FILTER FABRIC SHALL BE LEFT IN PLACE UNTIL PERMANENT VEGETATIVE COVER IS ESTABLISHED UNLESS REMOVAL IS AUTHORIZED BY A WILLIAMS REPRESENTATIVE.
9. FILTER FABRIC SHALL BE REPLACED WHENEVER IT HAS DETERIORATED TO SUCH AN EXTENT THAT IT REDUCES THE EFFECTIVENESS OF THE FILTER FABRIC.
10. FILTER FABRIC SHALL BE PLACED TO FOLLOW (RUN PARALLEL TO) THE CONTOURS.
11. ON UPSLOPE INSTALLATIONS, BOTH ENDS OF THE FILTER FABRIC SHALL BE TURNED AND EXTENDED UPSLOPE.
12. AREA DISTURBED AS A RESULT OF REMOVING THE FILTER FABRIC SHALL BE RESTABILIZED BY SEEDING IN ACCORDANCE WITH THE REVEGETATION SPECIFICATIONS.

REFERENCE DRAWINGS	
DRAWING NO.	TITLE

SEDIMENT BARRIER - SILT FENCE OPTION

SILT

Williams WEST

FIGURE 2.1

REVISIONS						
NO.	DATE	BY	DESCRIPTION	W.O. NO.	CHK.	APP.

DRAWN BY: EE	DATE: 4-3-2017	ISSUED FOR BID:	SCALE: NONE
CHECKED BY:	DATE:	ISSUED FOR CONSTRUCTION:	
APPROVED BY:	DATE:	DRAWING NUMBER: STD-A-2-3047	SHEET 1 OF 2

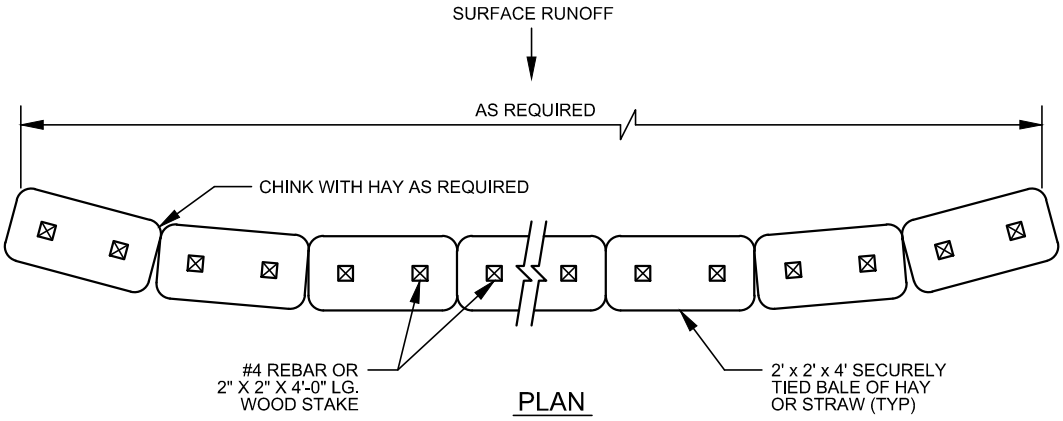

PLAN

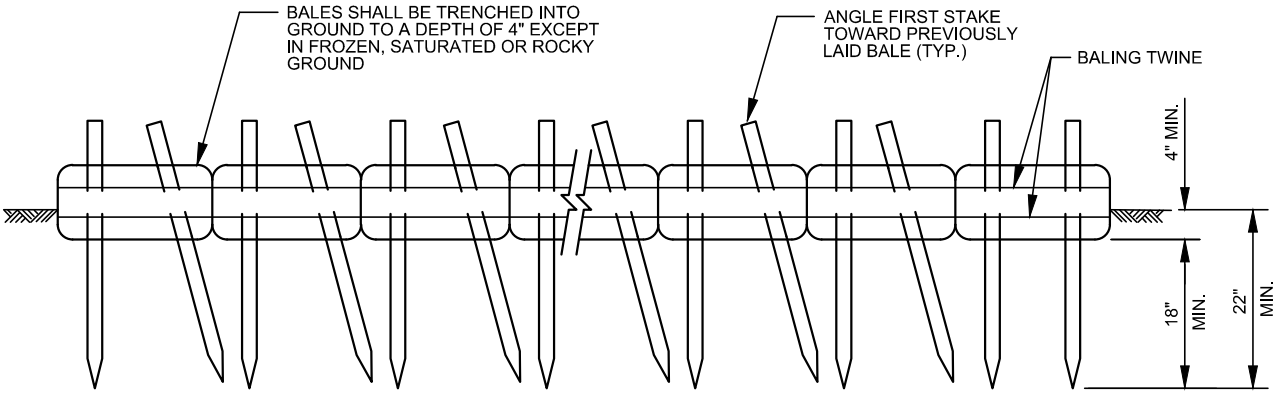

ELEVATION

NOTES:

1. BALE BARRIERS SHALL BE PLACED TO FOLLOW (RUN PARALLEL TO) THE CONTOURS AND SHALL NOT BE LOCATED IN AREAS OF CONCENTRATED FLOW.
2. AT A MINIMUM INSTALL AND MAINTAIN TEMPORARY SEDIMENT BARRIER AT THE BASE OF SLOPES > 5% WHERE THE BASE OF THE SLOPE IS < 50 FEET FROM WATERBODY, WETLAND OR ROAD CROSSING.
3. INSTALLATIONS SHALL BE CHECKED AFTER EACH RAINFALL AND IF FLOW IS OBSTRUCTED, THE SEDIMENT SHALL BE REMOVED.
4. ON UPSLOPE INSTALLATIONS, BOTH ENDS OF THE BALE BARRIER SHALL BE TURNED AND EXTENDED UPSLOPE.
5. AREA DISTURBED AS A RESULT OF REMOVING THE BALE BARRIER SHALL BE RESTABILIZED BY SEEDING ACCORDING TO THE REVEGETATION SPECIFICATIONS.
6. CONTRACTOR SHALL USE CERTIFIED NOXIOUS WEED FREE HAY OR STRAW.
7. BALES SHALL BE PLACED SUCH THAT TIES OR BALING TWINE ARE NOT IN CONTACT WITH THE GROUND.
8. STAKES SHALL BE DRIVEN A MINIMUM OF 18" INTO THE GROUND.
9. BALE BARRIERS SHALL BE LEFT IN PLACE UNTIL PERMANENT VEGETATION COVER IS ESTABLISHED. MATERIAL FROM BALE BARRIERS MAY THEN BE USED AS MULCH AND SCATTERED OVER THE SURROUNDING AREA AS DIRECTED BY A WILLIAMS REPRESENTATIVE.
10. ANY NON-BIODEGRADABLE MATERIALS SUCH AS REBAR MUST BE REMOVED FROM RIGHT-OF-WAY.

REFERENCE DRAWINGS	
DRAWING NO.	TITLE

SEDIMENT BARRIER - STRAW BALE OPTION

SB

Williams WEST

FIGURE 2.2

REVISIONS						
NO.	DATE	BY	DESCRIPTION	W.O. NO.	CHK.	APP.

DRAWN BY: EE	DATE: 4-3-2017	ISSUED FOR BID:	SCALE: NONE
CHECKED BY:	DATE:	ISSUED FOR CONSTRUCTION:	
APPROVED BY:	DATE:	DRAWING NUMBER: STD-A-2-3047	SHEET 2 OF 2

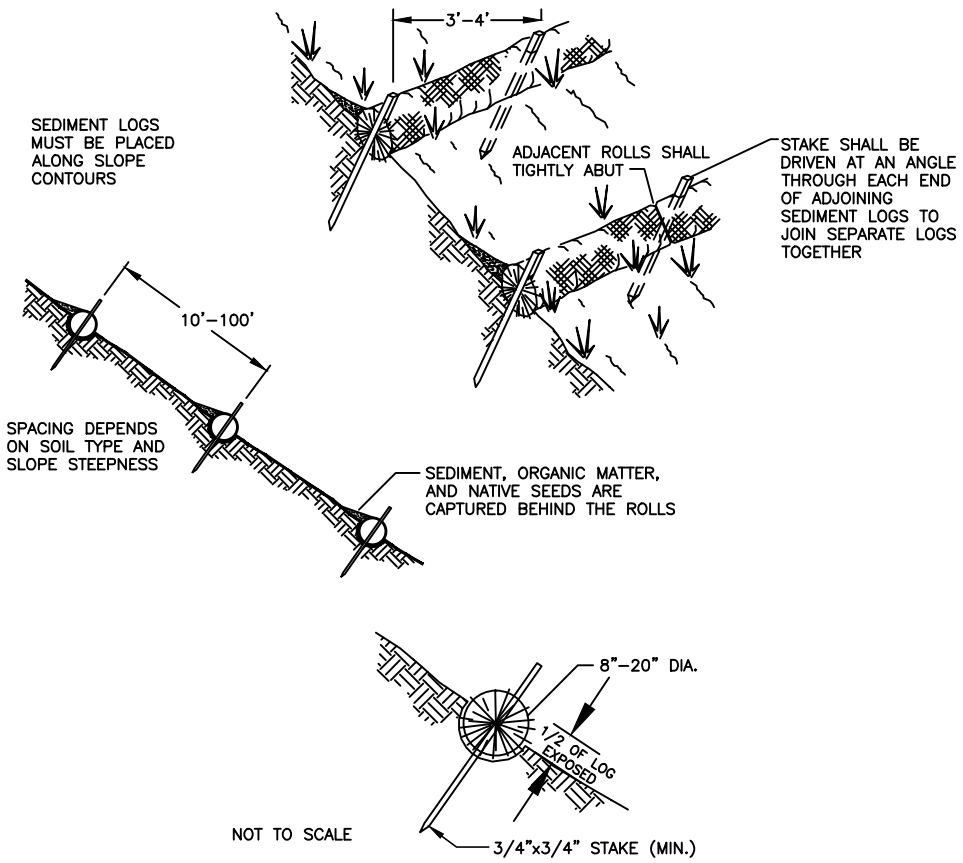

NOTES:

1. Install logs nearly perpendicular to the flow direction and parallel to the slope contour (3 to 5% grade). Extend logs 3 feet into undisturbed vegetation at the downslope right-of-way (ROW) edge. Ends of the logs should be placed so that sediment is not discharged directly into a waterbody or wetland.
2. Narrow trenches should be dug across the slope on contour to a depth of 3 to 5 inches on clay soils and soils with gradual slopes. On loose soils, steep slopes, and areas with high rainfall, the trenches should be dug to a depth of 5 to 7 inches, or 1/2 to 2/3 of the thickness of the log.
3. Build trenches and install logs from the base of the slope and work up. Excavated material should be spread evenly along the uphill slope and compacted using hand tamping or other methods.
4. Construct trenches at contour intervals of 10-100 feet apart depending on the steepness of the slope, soil type, and rainfall. The steeper the slope the closer together the trenches. Spacing shall be as directed by a Williams representative.
5. Eight to ten inch diameter sediment logs shall be used for general erosion control purposes. Twenty-inch diameter sediment logs shall be used when used to replace slope breakers.
6. Install the logs snugly into the trenches and abut tightly end to end. Do not overlap the ends.
7. Install stakes at each end of the log, and at 4-foot centers along entire length of log.
8. If necessary, install pilot holes for the stakes using a straight bar to drive holes through the log and into the soil.
9. At a minimum, wooden stakes should be approximately 3/4 x 3/4 x 24 inches and be driven 18 inches in to the soil.
10. Logs may be straw (cereal grain or rice), coconut fiber or equivalent. Rice straw logs shall not be used in wetlands or within 50 feet of a wetland or waterbody unless the rice straw is certified seed free.
11. Sediment logs shall not be used in lieu of silt fence at waterbody or wetland crossings but may be used for temporary erosion control across the ROW on upland slopes as directed by a Williams representative.

REFERENCE DRAWINGS	
DRAWING NO.	TITLE

SEDIMENT LOGS (WATTLES)

SL

FIGURE 3

Williams WEST

REVISIONS						
NO.	DATE	BY	DESCRIPTION	W.O. NO.	CHK.	APP.

DRAWN BY: EE	DATE: 4-3-2017	ISSUED FOR BID:	SCALE: NONE
CHECKED BY:	DATE:	ISSUED FOR CONSTRUCTION:	
APPROVED BY:	DATE:	DRAWING NUMBER: STD-A-2-3066	SHEET 1 OF 1

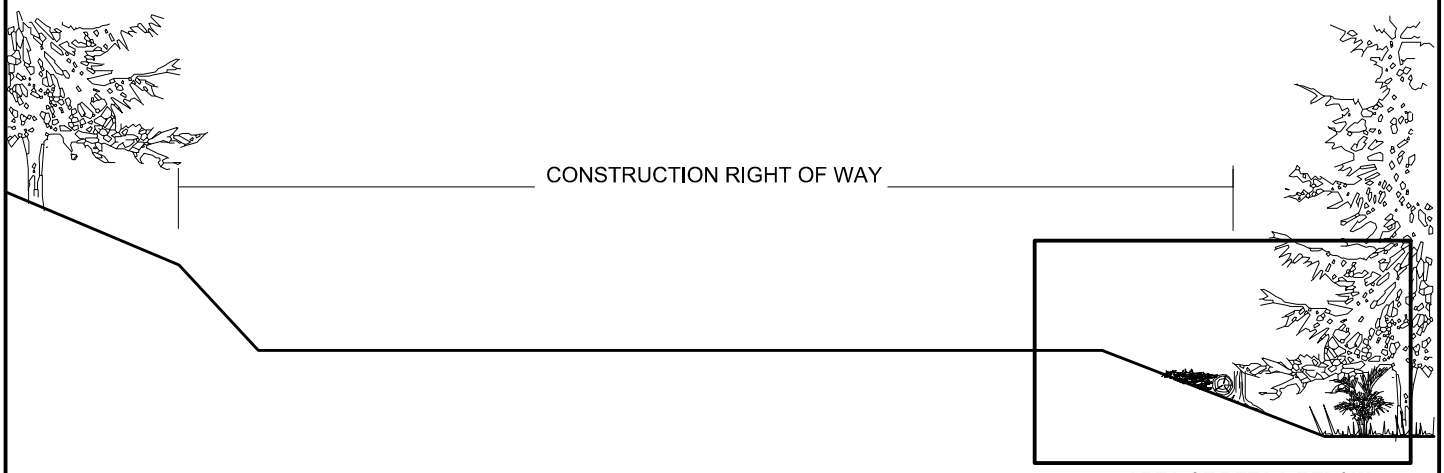

1 LOGGING SLASH

2 CULL LOGS

3 STUMP/TREE SUPPORT

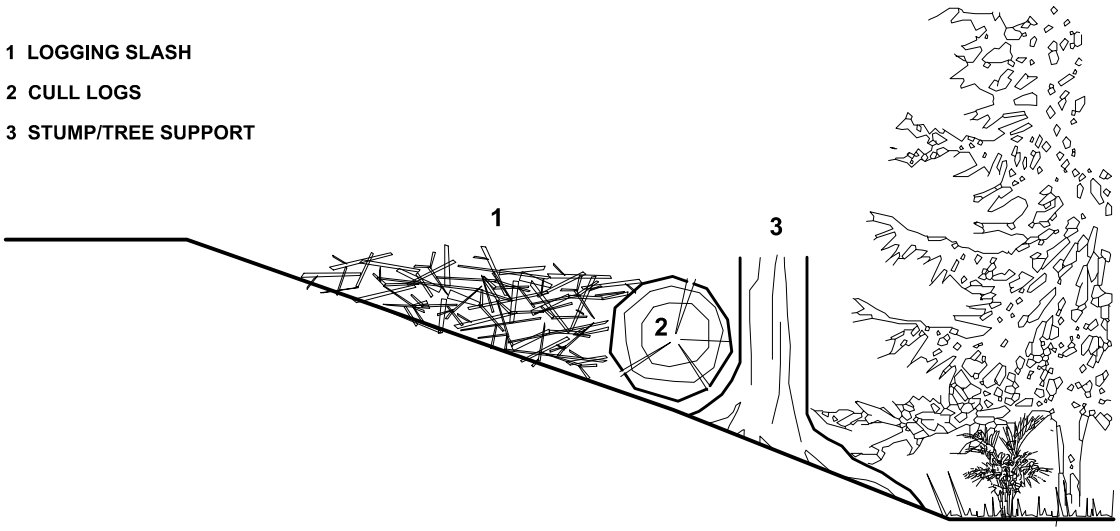

Slash-Filter Windrows

1. In forested areas during timber clearing/right-of-way grading operations slash-filter windrows will be constructed on the downhill edge of the Construction Right-of-Way and Temporary Extra Work Areas (TEWAs), as directed by the Environmental Inspector.

2. Slash-filter windrows will be constructed of logging slash including cull logs, tree tops, limbs and branches. The windrow may be supported at the base by cull logs or rocks, which may be supported by stumps, rocks or trees parallel to the right-of-way.

3 Material in the windrow would be constructed (packed/tamped) to form a compact windrow that will be effective in filtering sediment, reducing water velocities and preventing stream sedimentation.

4. Windrows shall be placed so that they do not interfere with functioning drainage structures or stream channels.

REFERENCE DRAWINGS	
DRAWING NO.	TITLE

SLASH-FILTER WINDROW

SSW

Williams WEST

FIGURE 4

REVISIONS						
NO.	DATE	BY	DESCRIPTION	W.O. NO.	CHK.	APP.

DRAWN BY: EE	DATE: 4-3-2017	ISSUED FOR BID:	SCALE: NONE
CHECKED BY:	DATE:	ISSUED FOR CONSTRUCTION:	
APPROVED BY:	DATE:	DRAWING NUMBER:	SHEET 1 OF 1

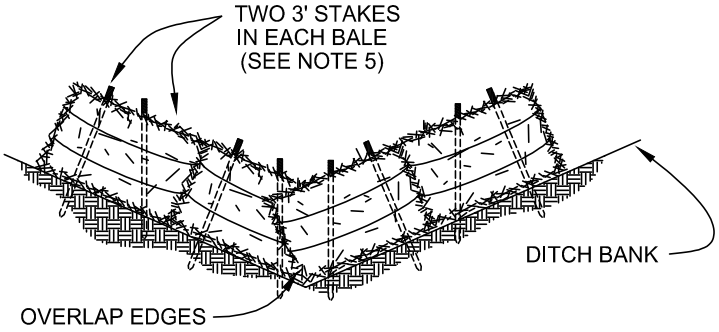

SECTION A-A

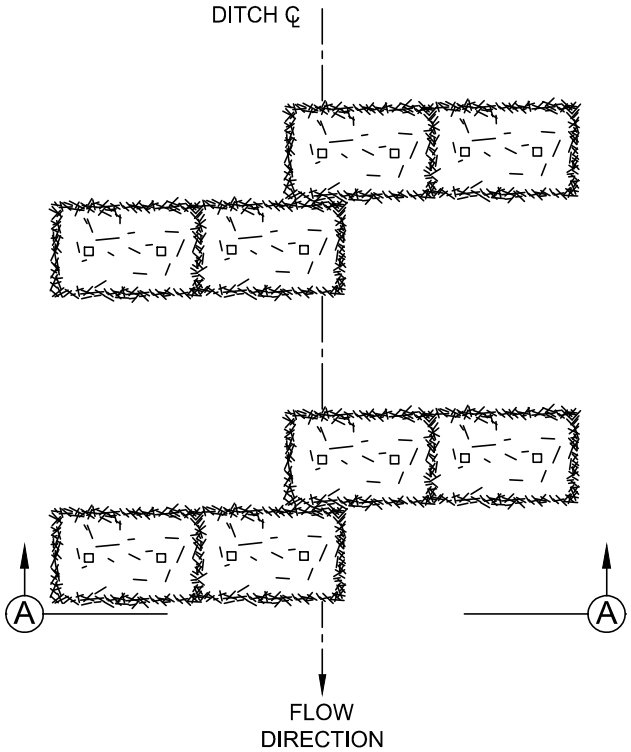

PLAN VIEW

NOTES;

1. PLACE STRAW BALE SEDIMENT BARRIERS IN SMALL INTERMITTENT DRAINAGES OR ROAD DITCHES THAT MAY CONVEY SEDIMENT LADEN RUNOFF FROM THE CONSTRUCTION RIGHT-OF-WAY (ROW) AND TEWAS DURING STORM EVENTS.
2. DRIVE STAKES A MINIMUM OF 18 INCHES INTO THE GROUND.
3. USE WOOD STAKES WHENEVER POSSIBLE. STEEL REBAR MAY BE USED WHEN SOIL IS FROZEN OR ROCKY.
4. SEDIMENT CONTROL STRUCTURES CAN BE PLACED OFF THE CONSTRUCTION ROW BY HAND IF THE LOCATION HAS BEEN APPROVED BY A WILLIAMS REPRESENTATIVE.
5. CONTRACTOR SHALL USE CERTIFIED WEED FREE STRAW.

REFERENCE DRAWINGS	
DRAWING NO.	TITLE

SEDIMENT CONTROL IN DITCHES AND SWALES

SC

Williams WEST

FIGURE 5

REVISIONS						
NO.	DATE	BY	DESCRIPTION	W.O. NO.	CHK.	APP.
	10/22/2015					

DRAWN BY: EE	DATE: 4-3-2017	ISSUED FOR BID:	SCALE: NONE
CHECKED BY:	DATE:	ISSUED FOR CONSTRUCTION:	
APPROVED BY:	DATE:	DRAWING NUMBER: STD-A-2-3067	SHEET 1 OF 1

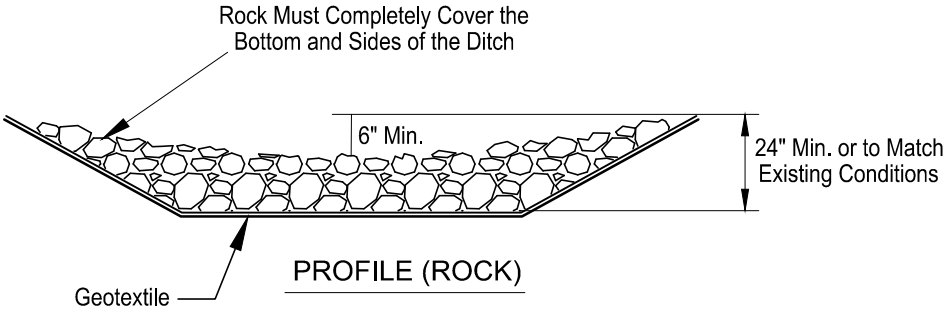

PROFILE (ROCK)

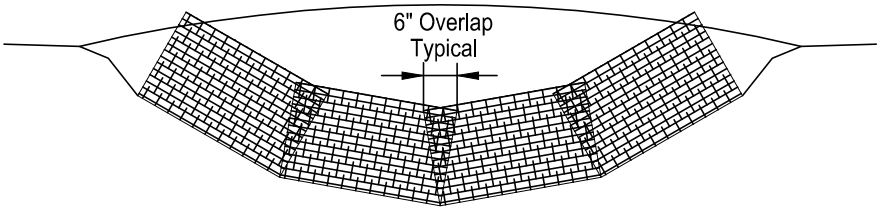

PROFILE (BIO BAG)

Notes:

1. Use wood stakes whenever possible. Steel rebar may be used when soil is frozen or rocky.
2. Biobags, straw wattles, or other approved materials may be used.
3. Sediment control structures can be placed off the construction right-of-way and TEWAs by hand if the location has been approved by the Environmental Inspector.
4. Contractor shall use certified weed free straw.
5. Geotextile (3 oz/yd woven geotextile) shall be installed beneath the rock fill. Rock fill will be clean 2" - 6" crushed ballast rock.

REFERENCE DRAWINGS	
DRAWING NO.	TITLE

SEDIMENT CONTROL IN DITCHES AND SWALES

SC

FIGURE 6

Williams WEST

REVISIONS						
NO.	DATE	BY	DESCRIPTION	W.O. NO.	CHK.	APP.

DRAWN BY: EE	DATE: 4-3-2017	ISSUED FOR BID:	SCALE: NONE
CHECKED BY:	DATE:	ISSUED FOR CONSTRUCTION:	
APPROVED BY:	DATE:	DRAWING NUMBER:	SHEET 1 OF 1

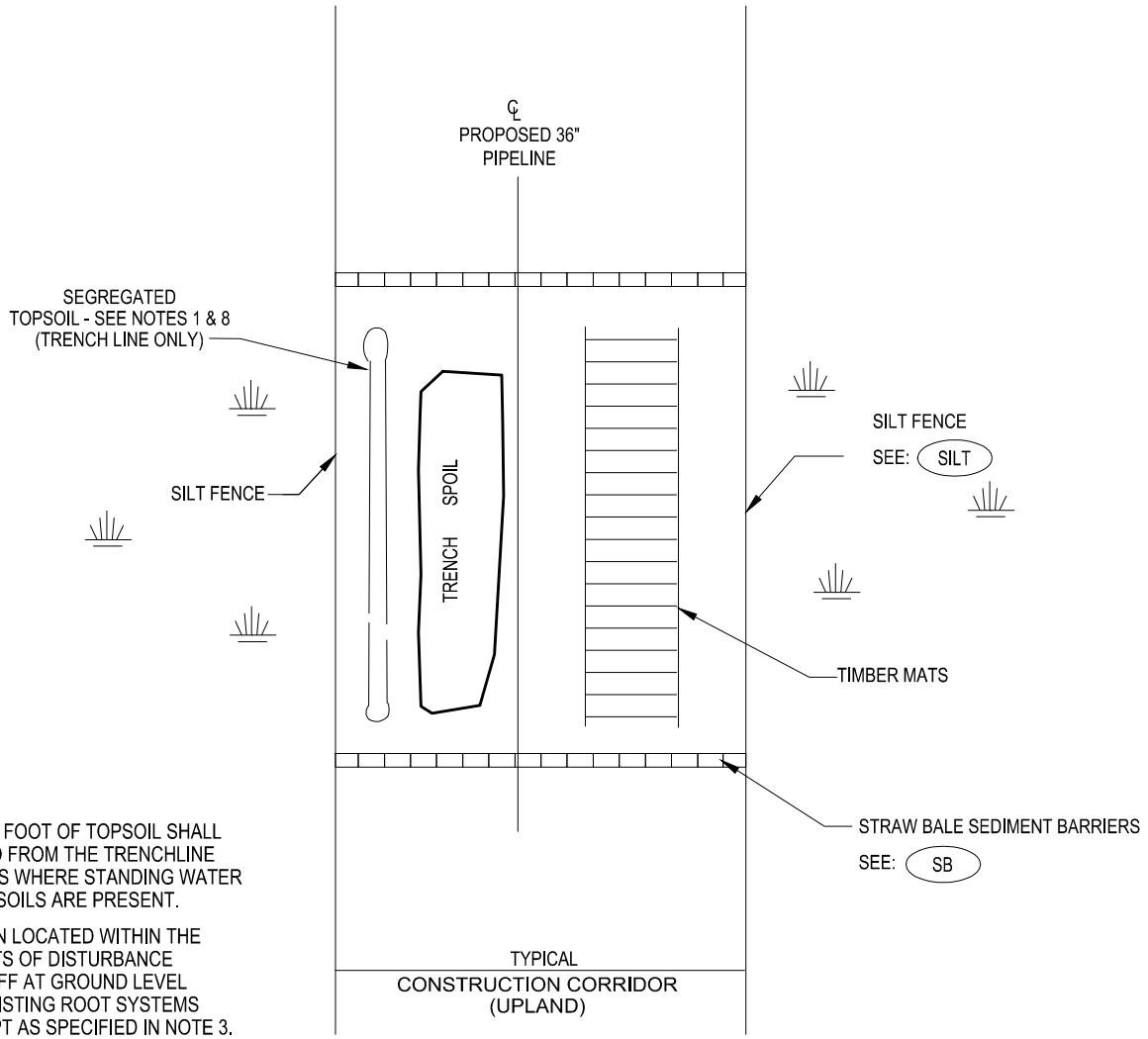

NOTES:

1. THE TOP ONE (1) FOOT OF TOPSOIL SHALL BE SEGREGATED FROM THE TRENCHLINE EXCEPT IN AREAS WHERE STANDING WATER OR SATURATED SOILS ARE PRESENT.
2. THE VEGETATION LOCATED WITHIN THE PROPOSED LIMITS OF DISTURBANCE SHALL BE CUT OFF AT GROUND LEVEL LEAVING THE EXISTING ROOT SYSTEMS IN PLACE, EXCEPT AS SPECIFIED IN NOTE 3.
3. PULLING OF TREE STUMPS AND GRADING ACTIVITIES SHALL BE LIMITED TO THE AREA DIRECTLY OVER THE TRENCHLINE UNLESS SAFETY CONDITIONS REQUIRE THE REMOVAL OF TREE STUMPS FROM UNDER THE WORKING SIDE OF THE CONSTRUCTION CORRIDOR.
4. CONSTRUCTION CORRIDOR THROUGH WETLANDS WILL BE 75 FEET WIDE UNLESS A VARIANCE IS GRANTED. CONFIGURATION OF RIGHT-OF-WAY MAY VARY.

PLAN VIEW

REFERENCE DRAWINGS	
DRAWING NO.	TITLE

CROSSING DETAIL FOR WETLANDS

WC

Williams WEST

FIGURE 7.1

REVISIONS						
NO.	DATE	BY	DESCRIPTION	W.O. NO.	CHK.	APP.

DRAWN BY: EE	DATE: 4-3-2017	ISSUED FOR BID:	SCALE: NONE
CHECKED BY:	DATE:	ISSUED FOR CONSTRUCTION:	
APPROVED BY:	DATE:	DRAWING NUMBER:	SHEET 1 OF 2

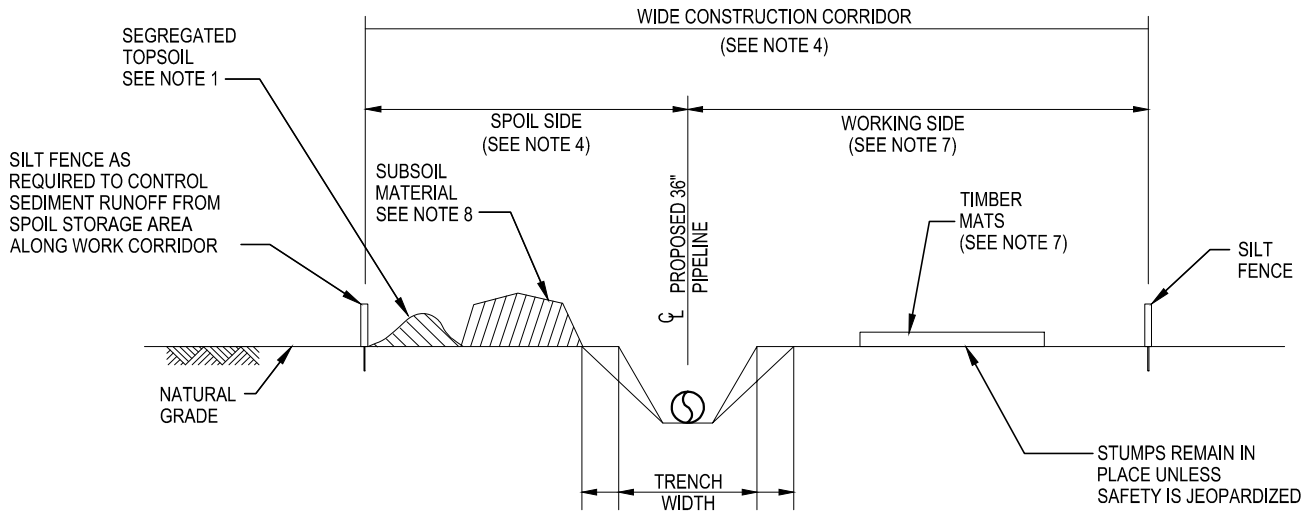

TRENCH WIDTH VARIES DEPENDING ON SOILS ENCOUNTERED DURING CONSTRUCTION

NOTES CONTINUED:

5. SILT FENCE OR STRAW BALES WILL BE USED WHERE APPROPRIATE TO PREVENT SILTATION INTO WATER BODIES OR WETLANDS.

6. SILT FENCES OR STRAW BALES WILL ALSO BE USED TO PREVENT STOCKPILED SOIL OR SPOIL FROM LEAVING THE CONSTRUCTION RIGHT-OF-WAY OR WORKSPACES.

7. TIMBER MATS MAY BE USED OVER SPOIL STORAGE WHERE STANDING WATER OR SATURATED SOILS ARE PRESENT.

8. IF STANDING WATER OR SATURATED SOILS ARE PRESENT, OR IF CONSTRUCTION EQUIPMENT CAUSES RUTS OR MIXING OF TOPSOIL AND SUBSOIL IN WETLANDS, USE LOW-GROUND WEIGHT EQUIPMENT, OR OPERATE NORMAL EQUIPMENT ON TIMBER RIPRAP, PREFABRICATED EQUIPMENT MATS OR TERRA MATS.

CROSS SECTION

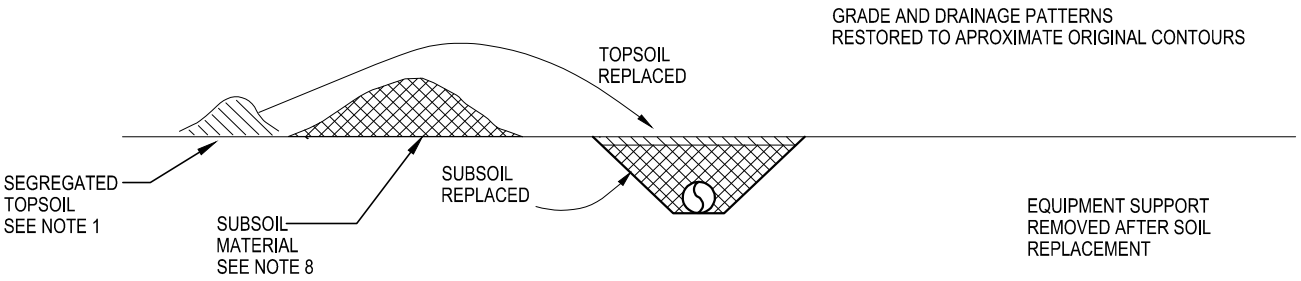

REFERENCE DRAWINGS	
DRAWING NO.	TITLE

CROSSING DETAIL FOR WETLANDS

WC

Williams WEST

FIGURE 7.2

REVISIONS						
NO.	DATE	BY	DESCRIPTION	W.O. NO.	CHK.	APP.

DRAWN BY: EE	DATE: 4-3-2017	ISSUED FOR BID:	SCALE: NONE
CHECKED BY:	DATE:	ISSUED FOR CONSTRUCTION:	
APPROVED BY:	DATE:	DRAWING NUMBER: STD-A-2-2066	SHEET 2 OF 2

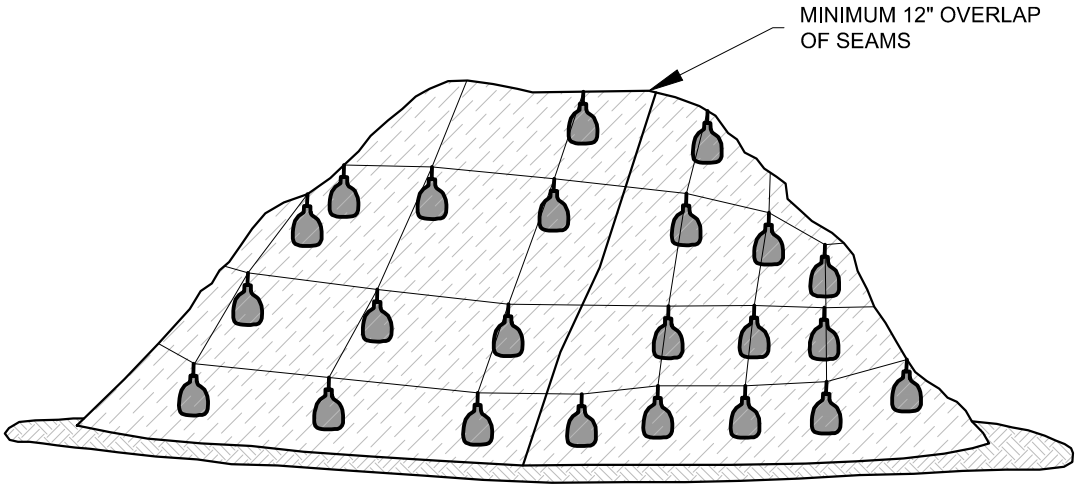

NOTES:

1. MINIMUM 12" OVERLAP OF ALL SEAMS REQUIRED.
2. COVERING MAINTAINED TIGHTLY IN PLACE BY USING SANDBAGS OR TIRES ON ROPES WITH A MAXIMUM 10' GRID SPACING IN ALL DIRECIONS.
3. PLASTIC (VISQUEEN) SHEETING CAN BE USED TO COVER SOIL STOCKPILES WHERE EROSION PROBLEMS OCCUR IN THE WET SEASON AND ARE UNABLE, DUE TO THE SOFT SOIL CONDITIONS, TO BE ACCESSED BY EQUIPMENT TO MAKE A PERMANENT REPAIR OR PLACEMENT OF OTHER APPROPRIATE BMPS. UNDER THESE CONDITIONS NORTHWEST WILL CONSIDER A TEMPORARY PLACEMENT OF PLASTIC SHEETING TO PROTECT THE AREA AND DIVERT RUNOFF AWAY FROM THE AREA OF CONCERN UNTIL A MORE PERMANENT SOLUTION CAN BE APPLIED.

REFERENCE DRAWINGS	
DRAWING NO.	TITLE

SOIL STOCKPILE COVER
TEMPORARY EROSION CONTROL MEASURE

SSC

Williams WEST

FIGURE 8

REVISIONS						
NO.	DATE	BY	DESCRIPTION	W.O. NO.	CHK.	APP.

DRAWN BY: EE	DATE: 4-3-2017	ISSUED FOR BID:	SCALE: NONE
CHECKED BY:	DATE:	ISSUED FOR CONSTRUCTION:	
APPROVED BY:	DATE:	DRAWING NUMBER:	SHEET 1 OF 1

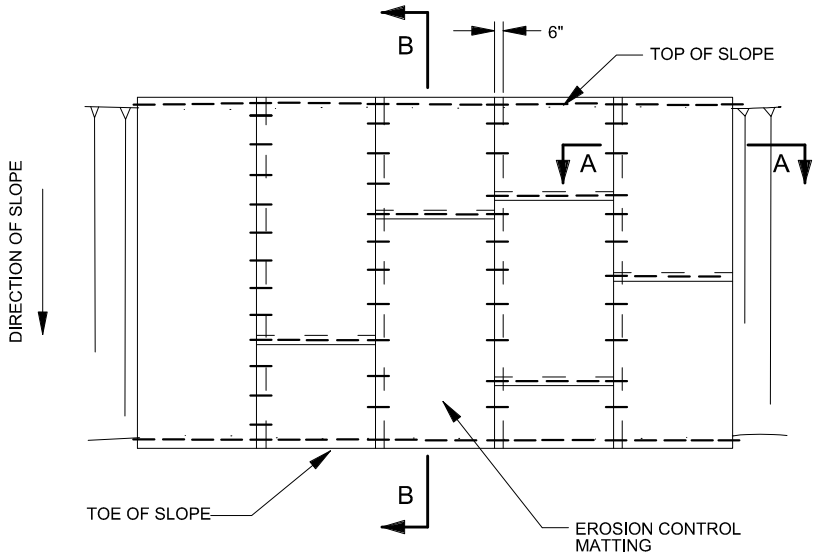

PLAN

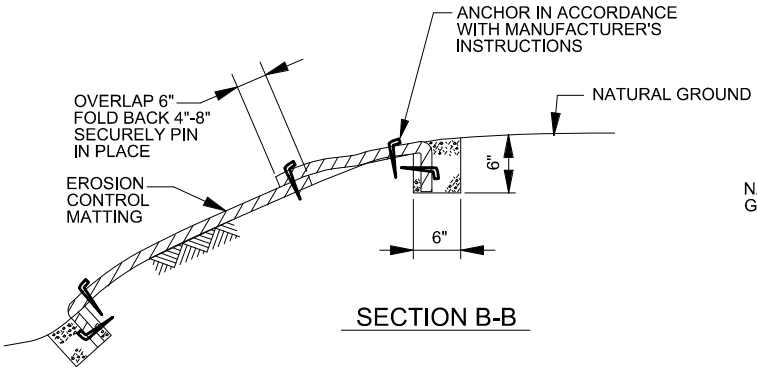

SECTION B-B

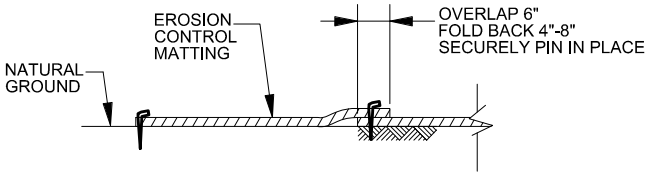

SECTION A-A

NOTES:

1. THE EROSION CONTROL MAT SHALL MEET THE SPECIFICATIONS OF THE EROSION CONTROL TECHNOLOGY COUNCIL (ECTC) FOR A TYPE 2D SHORT-TERM EROSION CONTROL MAT. NETTING SHALL BE BIODEGRADABLE NATURAL FIBERS. EROSION CONTROL MATS SHALL BE FURNISHED IN CONTINUOUS ROLLS OF 30' OR OR GREATER WITH A MINIMUM WIDTH OF 4'

2. BIODEGRADABLE PINS SUCH AS BIO-PIN OR APPROVED EQUIVALENT WITH AT LEAST 5" LEGS AND A HOOKED OR ROUND TOP SHALL BE USED UNLESS OTHERWISE SPECIFIED IN THE PROJECT PERMITS. PINS SHALL BE DRIVEN INTO THE GROUND THEIR FULL LENGTH.

3. INSTALL EROSION CONTROL MATTING AT LOCATIONS SHOWN ON ALIGNMENT SHEETS OR AS SPECIFIED BY A WILLIAMS REPRESENTATIVE.

4. MONITOR FOR WASHOUTS, STAKE AND PIN INTEGRITY AND MAT MOVEMENT. REPLACE OR REPAIR AS DIRECTED BY A WILLIAMS REPRESENTATIVE.

REFERENCE DRAWINGS

DRAWING NO.	TITLE

EROSION CONTROL MATTING
EMBANKMENT INSTALLATION FOR
PERMANENT EROSION CONTROL MEASURE
ECM

FIGURE 9.1

Williams WEST

REVISIONS

NO.	DATE	BY	DESCRIPTION	W.O. NO.	CHK.	APP.
4	10/22/2015	KLL	REVISED PER REDLINES			

DRAWN BY: KLL	DATE: 2-2-2001	ISSUED FOR BID:	SCALE: NONE
CHECKED BY:	DATE:	ISSUED FOR CONSTRUCTION:	
APPROVED BY:	DATE:	DRAWING NUMBER: STD-A-2-3050	SHEET 1 OF 4

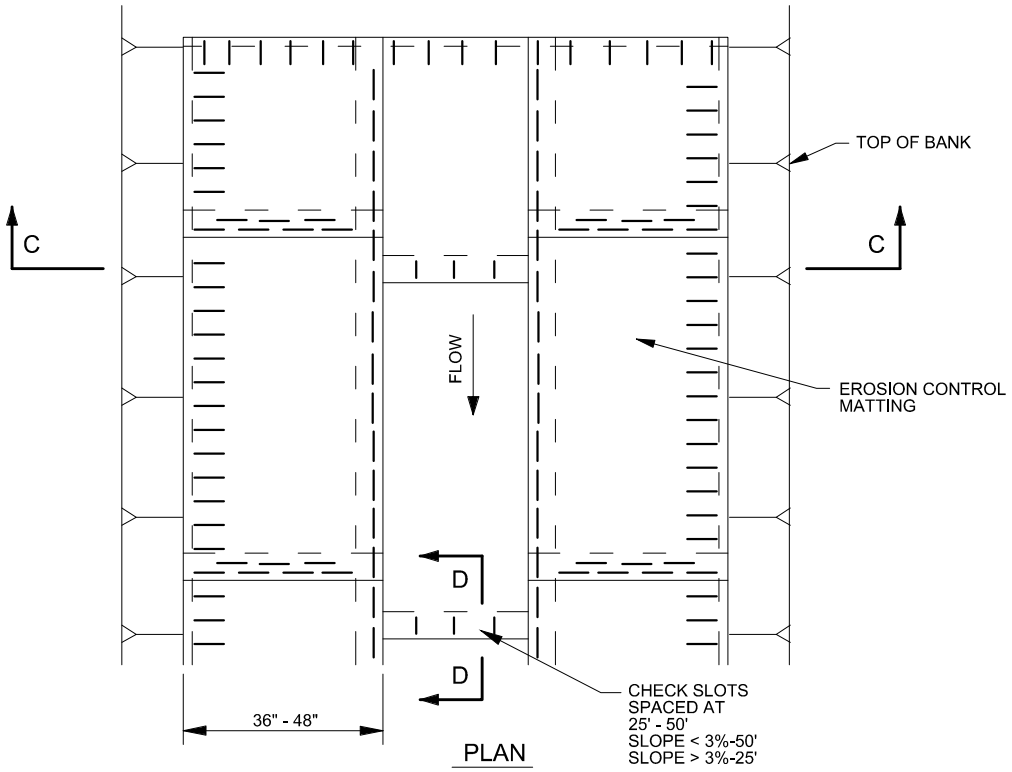

PLAN

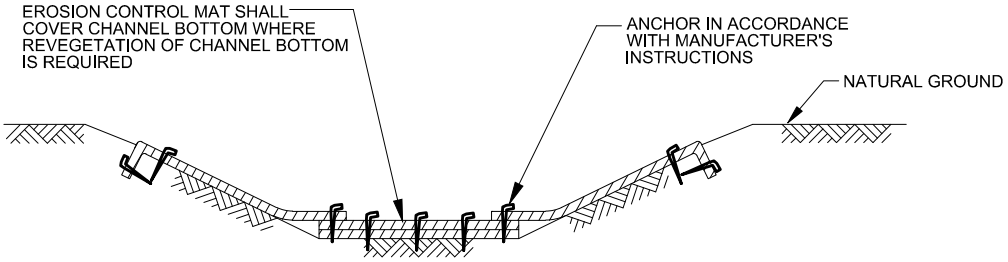

SECTION C-C

NOTES:

1. THE EROSION CONTROL MAT SHALL MEET THE SPECIFICATIONS OF THE EROSION CONTROL TECHNOLOGY COUNCIL (ECTC) FOR A TYPE 2D SHORT-TERM EROSION CONTROL MAT. NETTING SHALL BE BIODEGRADABLE NATURAL FIBERS. EROSION CONTROL MATS SHALL BE FURNISHED IN CONTINUOUS ROLLS OF 30' OR OR GREATER WITH A MINIMUM WIDTH OF 4'

2. BIODEGRADABLE PINS SUCH AS BIO-PIN OR APPROVED EQUIVALENT WITH AT LEAST 5" LEGS AND A HOOKED OR ROUND TOP SHALL BE USED UNLESS OTHERWISE SPECIFIED IN THE PROJECT PERMITS. PINS SHALL BE DRIVEN INTO THE GROUND THEIR FULL LENGTH.

3. INSTALL EROSION CONTROL MATTING AT LOCATIONS SHOWN ON ALIGNMENT SHEETS OR AS SPECIFIED BY A WILLIAMS REPRESENTATIVE.

4. MONITOR FOR WASHOUTS, STAKE AND PIN INTEGRITY AND MAT MOVEMENT. REPLACE OR REPAIR AS DIRECTED BY A WILLIAMS REPRESENTATIVE.

REFERENCE DRAWINGS	
DRAWING NO.	TITLE

EROSION CONTROL MATTING CHANNEL
INSTALLATION FOR PERMANENT EROSION CONTROL

ECM

Williams WEST

FIGURE 9.2

REVISIONS						
NO.	DATE	BY	DESCRIPTION	W.O. NO.	CHK.	APP.

DRAWN BY: EE	DATE: 4-3-2017	ISSUED FOR BID:	SCALE: NONE
CHECKED BY:	DATE:	ISSUED FOR CONSTRUCTION:	
APPROVED BY:	DATE:	DRAWING NUMBER: STD-A-2-3050	SHEET 2 OF 4

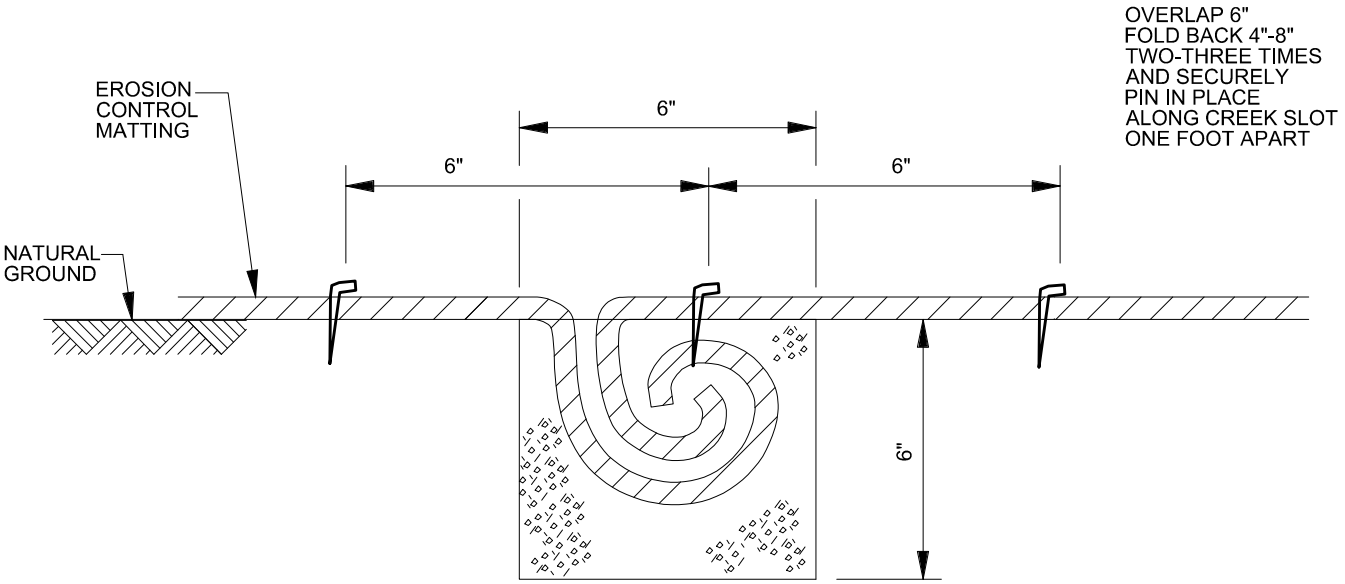

SECTION D-D

NOTES:

1. THE EROSION CONTROL MAT SHALL MEET THE SPECIFICATIONS OF THE EROSION CONTROL TECHNOLOGY COUNCIL (ECTC) FOR A TYPE 2D SHORT-TERM EROSION CONTROL MAT. NETTING SHALL BE BIODEGRADABLE NATURAL FIBERS. EROSION CONTROL MATS SHALL BE FURNISHED IN CONTINUOUS ROLLS OF 30' OR OR GREATER WITH A MINIMUM WIDTH OF 4'

2. BIODEGRADABLE PINS SUCH AS BIO-PIN OR APPROVED EQUIVALENT WITH AT LEAST 5" LEGS AND A HOOKED OR ROUND TOP SHALL BE USED UNLESS OTHERWISE SPECIFIED IN THE PROJECT PERMITS. PINS SHALL BE DRIVEN INTO THE GROUND THEIR FULL LENGTH.

3. INSTALL EROSION CONTROL MATTING AT LOCATIONS SHOWN ON ALIGNMENT SHEETS OR AS SPECIFIED BY A WILLIAMS REPRESENTATIVE.

4. MONITOR FOR WASHOUTS, STAKE AND PIN INTEGRITY AND MAT MOVEMENT. REPLACE OR REPAIR AS DIRECTED BY A WILLIAMS REPRESENTATIVE.

REFERENCE DRAWINGS	
DRAWING NO.	TITLE

EROSION CONTROL MATTING
PERMANENT EROSION CONTROL MEASURE
ECM

Williams WEST

FIGURE 9.3

REVISIONS						
NO.	DATE	BY	DESCRIPTION	W.O. NO.	CHK.	APP.

DRAWN BY: EE	DATE: 4-3-2017	ISSUED FOR BID:	SCALE: NONE
CHECKED BY:	DATE:	ISSUED FOR CONSTRUCTION:	
APPROVED BY:	DATE:	DRAWING NUMBER: STD-A-2-3050	SHEET 3 OF 4

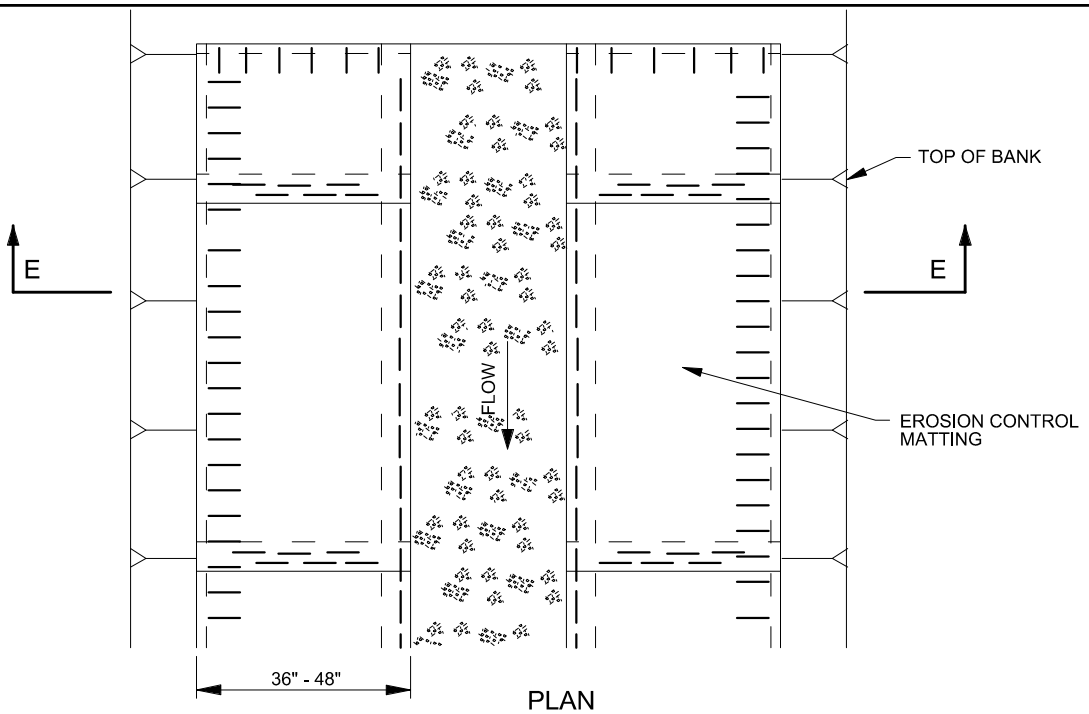

PLAN

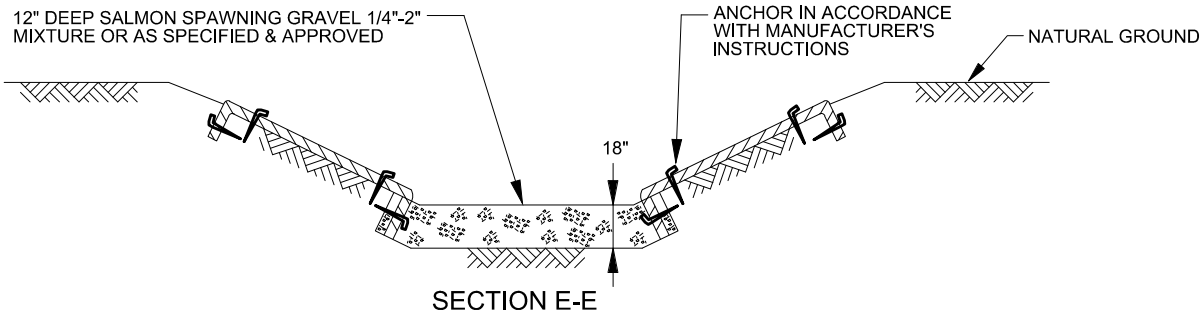

SECTION E-E

ESA STREAM RESTORATION ALTERNATIVE

NOTES:

1. THE EROSION CONTROL MAT SHALL MEET THE SPECIFICATIONS OF THE EROSION CONTROL TECHNOLOGY COUNCIL (ECTC) FOR A TYPE 2D SHORT-TERM EROSION CONTROL MAT. NETTING SHALL BE BIODEGRADABLE NATURAL FIBERS. EROSION CONTROL MATS SHALL BE FURNISHED IN CONTINUOUS ROLLS OF 30' OR OR GREATER WITH A MINIMUM WIDTH OF 4'.
2. BIODEGRADABLE PINS SUCH AS BIO-PIN OR APPROVED EQUIVALENT WITH AT LEAST 5" LEGS AND A HOOKED OR ROUND TOP SHALL BE USED UNLESS OTHERWISE SPECIFIED IN THE PROJECT PERMITS. PINS SHALL BE DRIVEN INTO THE GROUND THEIR FULL LENGTH.
3. INSTALL EROSION CONTROL MATTING AT LOCATIONS SHOWN ON ALIGNMENT SHEETS OR AS SPECIFIED BY A WILLIAMS REPRESENTATIVE.
4. MONITOR FOR WASHOUTS, STAKE AND PIN INTEGRITY AND MAT MOVEMENT. REPLACE OR REPAIR AS DIRECTED BY A WILLIAMS REPRESENTATIVE.

REFERENCE DRAWINGS	
DRAWING NO.	TITLE

EROSION CONTROL MATTING
PERMANENT EROSION CONTROL MEASURE
ECM

Williams WEST

FIGURE 9.4

REVISIONS						
NO.	DATE	BY	DESCRIPTION	W.O. NO.	CHK.	APP.

DRAWN BY: EE	DATE: 4-3-2017	ISSUED FOR BID:	SCALE: NONE
CHECKED BY:	DATE:	ISSUED FOR CONSTRUCTION:	
APPROVED BY:	DATE:	DRAWING NUMBER: STD-A-2-3050	SHEET 4 OF 4

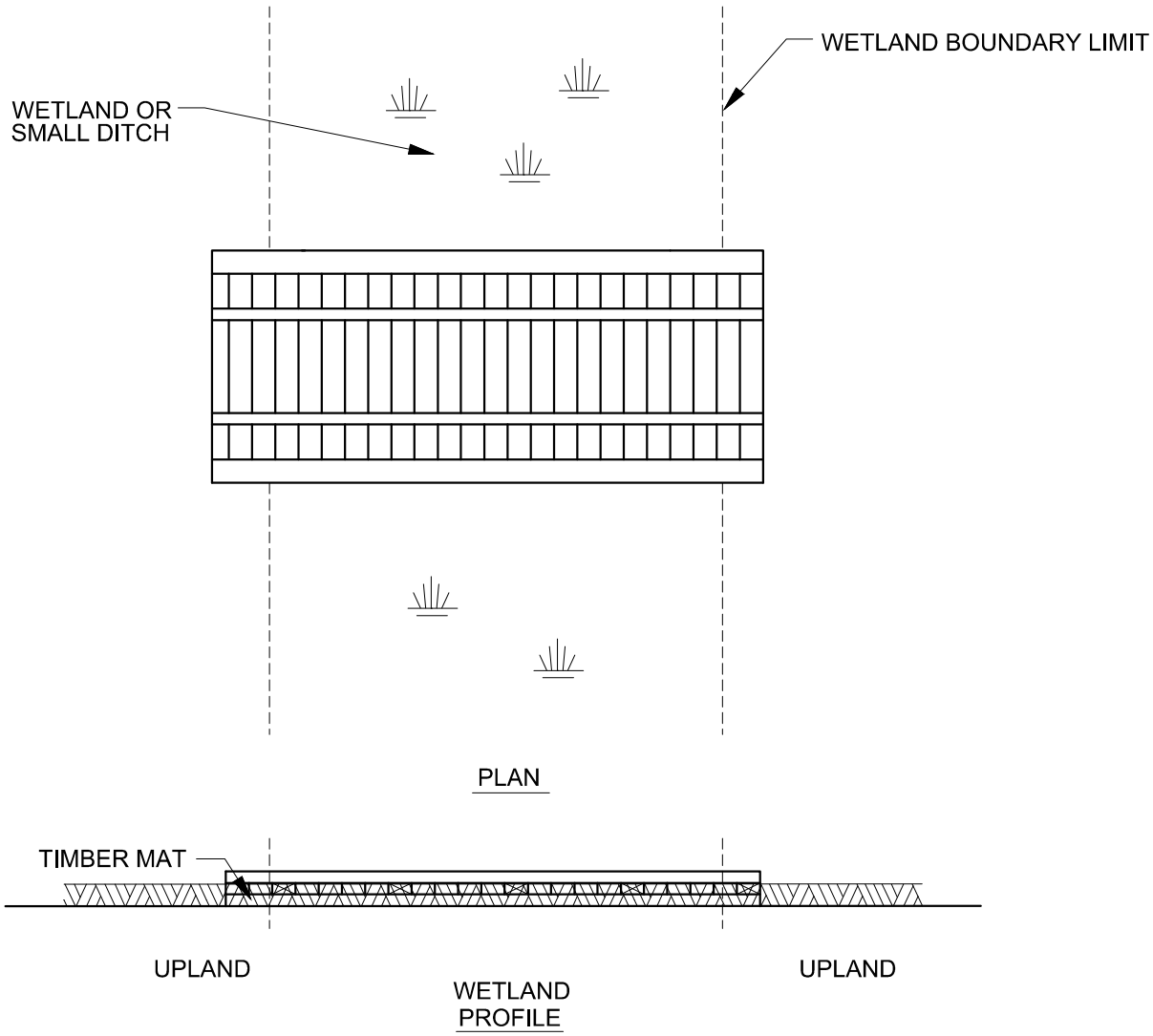

1. PERIODICALLY CHECK INSTALLATION AND REMOVE BUILD-UP OF SEDIMENT OR DEBRIS.
2. MATERIALS PLACED IN WETLANDS/DITCHES SHALL BE COMPLETELY REMOVED DURING FINAL CLEAN-UP. REMOVAL OF THIS STRUCTURE IS NOT CONTINGENT UPON ESTABLISHMENT OF PERMANENT VEGETATION.
3. EXTEND TIMBER MATS INTO UPLAND BEYOND WETLAND/DITCH BOUNDARY.
4. USE ADDITIONAL TIMBER MAT LAYERS TO RAISE CROSSING ABOVE GRADE WHERE WET OR SATURATATED SOIL CONDITIONS EXIST.
5. ONLY TIMBER MATS ARE TO BE USED IN WETLANDS UNLESS OTHERWISE APPROVED BY A WILLIAMS REPRESENTATIVE.
6. REFER TO WETLAND AND WATER BODY CROSSING TYPICALS FOR ADDITIONAL DETAIL ON PLACEMENT AND BMP'S.

REFERENCE DRAWINGS	
DRAWING NO.	TITLE

TIMBER MAT CROSSING - WETLAND/DITCH

TMC

Williams WEST

FIGURE 10.1

REVISIONS											
NO.	DATE	BY	DESCRIPTION	W.O. NO.	CHK.	APP.	DRAWN BY: EE	DATE: 4-3-2017	ISSUED FOR BID:	SCALE: NONE	
							CHECKED BY:	DATE:	ISSUED FOR CONSTRUCTION:		
							APPROVED BY:	DATE:	DRAWING NUMBER: STD-A-2-3045	SHEET 1 OF 2	

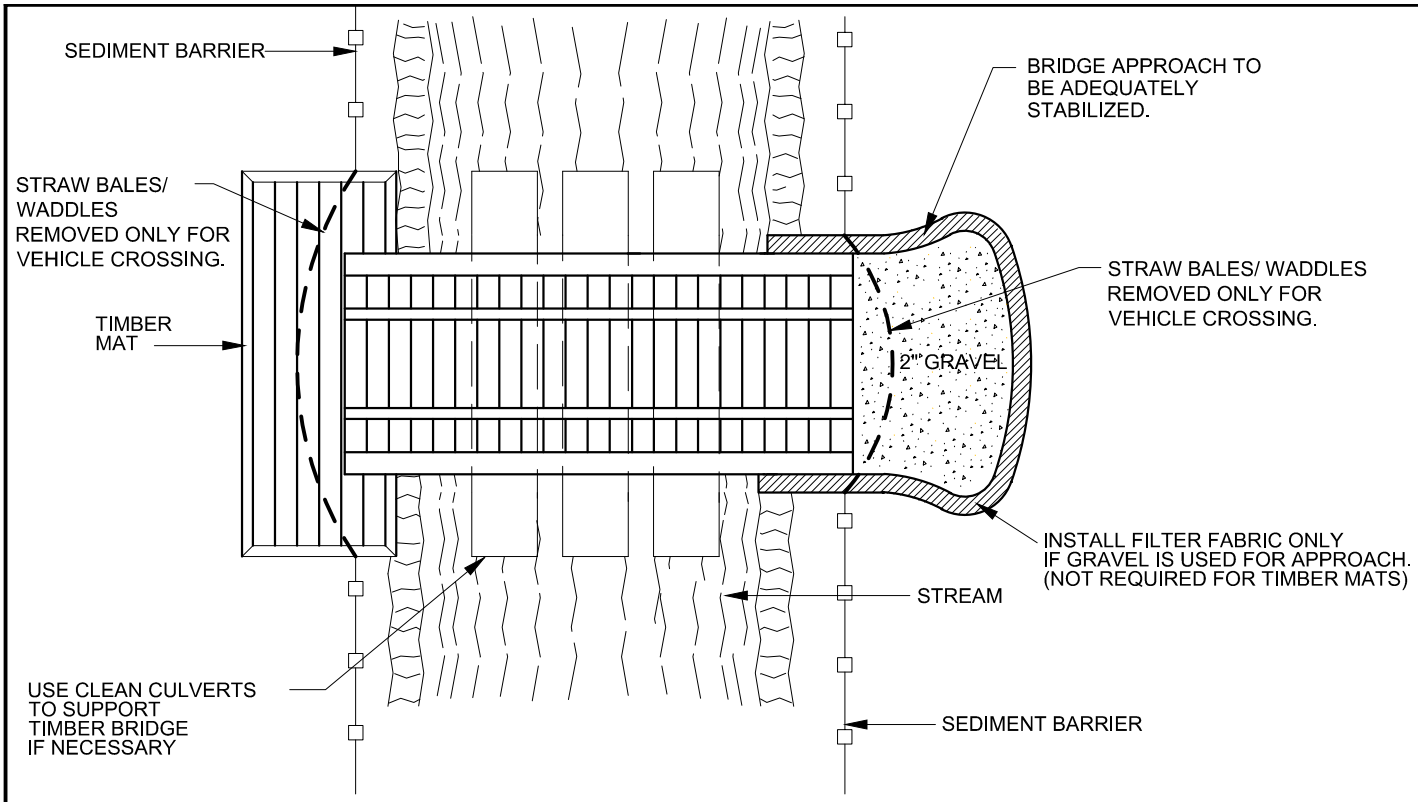

PLAN

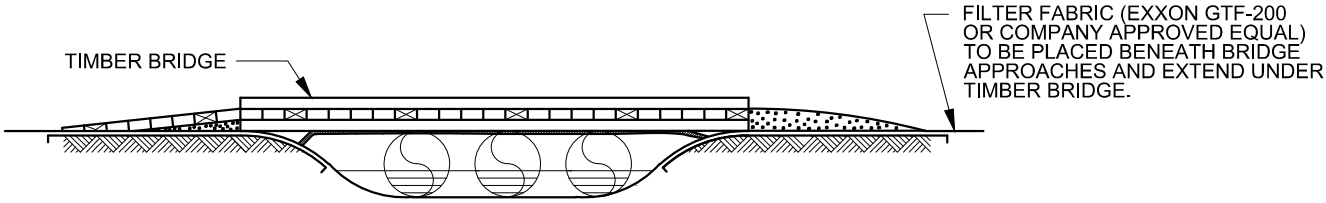

PROFILE

NOTES:

1. PORTABLE BRIDGES SHALL BE ADEQUATELY ANCHORED.
2. BRIDGES TO HAVE CURBS TO MAINTAIN DEBRIS/SEDIMENT.
3. BRIDGE DECK MUST BE WIDER THAN THE WIDEST PIECE OF EQUIPMENT THAT WILL BE CROSSING.
4. DECK SLATS MUST BE FLUSH TO PREVENT SEDIMENT/DEBRIS FROM PUSHING THROUGH CRACKS OR A GEOTEXTILE DIAPER INSTALLED UNDERNEATH.
5. PERIODICALLY CHECK BRIDGE INSTALLATION AND REMOVE BUILD-UP OF SEDIMENT OR DEBRIS ON BRIDGE.
6. BRIDGE APPROACHES SHALL BE EITHER COARSE AGGREGATE OR TIMBER EQUIPMENT MATS.
7. MATERIALS PLACED ALONG STREAM CHANNEL SHALL BE COMPLETELY REMOVED DURING FINAL CLEAN-UP.
8. CULVERTS SHALL BE USED TO SUPPORT THE BRIDGE TO PREVENT SETTLEMENT OF THE BRIDGE, IF NECESSARY. ENSURE CULVERTS ARE CLEAN PRIOR TO PLACEMENT IN WATERBODY. THE BRIDGES SHALL REMAIN ABOVE THE WATER SURFACE ELEVATION AT ALL TIMES.
9. CONTRACTOR MAY USE MANUFACTURED BRIDGES, RAIL CAR BRIDGES OR TIMBER BRIDGES IF APPROVED BY A WILLIAMS REPRESENTATIVE.
10. CULVERTS SHALL NOT RESTRICT FLOW AND SHALL BE DESIGNED TO WITHSTAND AND PASS THE HIGHEST FLOW THAT WOULD OCCUR WHILE THE BRIDGE IS IN PLACE.
11. SEDIMENT AND DEBRIS SHALL NOT ENTER THE WATERBODY.

REFERENCE DRAWINGS	
DRAWING NO.	TITLE

PORTABLE BRIDGE CROSSING-WATERBODY

PB

Williams WEST

FIGURE 10.2

REVISIONS						
NO.	DATE	BY	DESCRIPTION	W.O. NO.	CHK.	APP.

DRAWN BY: EE	DATE: 4-3-2017	ISSUED FOR BID:	SCALE: NONE
CHECKED BY:	DATE:	ISSUED FOR CONSTRUCTION:	
APPROVED BY:	DATE:	DRAWING NUMBER: STD-A-2-3045	SHEET 2 OF 2

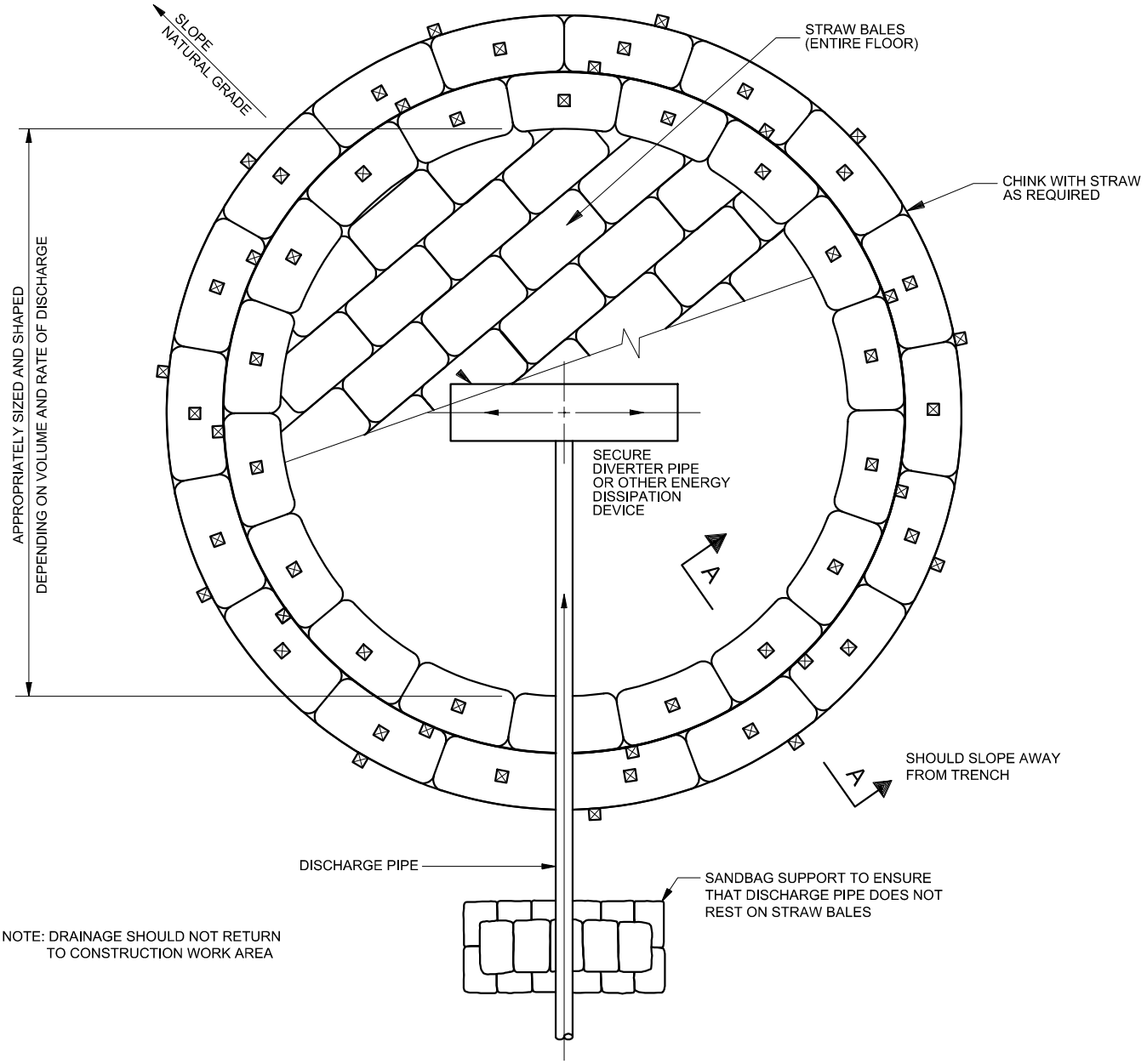

NOTE: DRAINAGE SHOULD NOT RETURN
TO CONSTRUCTION WORK AREA

REFERENCE DRAWINGS	
DRAWING NO.	TITLE

HYDROSTATIC TEST
DEWATERING STRUCTURE

HDW

Williams WEST

FIGURE 11.1

REVISIONS						
NO.	DATE	BY	DESCRIPTION	W.O. NO.	CHK.	APP.

DRAWN BY: EE	DATE: 4-3-2017	ISSUED FOR BID:	SCALE: NONE
CHECKED BY:	DATE:	ISSUED FOR CONSTRUCTION:	
APPROVED BY:	DATE:	DRAWING NUMBER: STD-A-2-3049	SHEET 1 OF 3

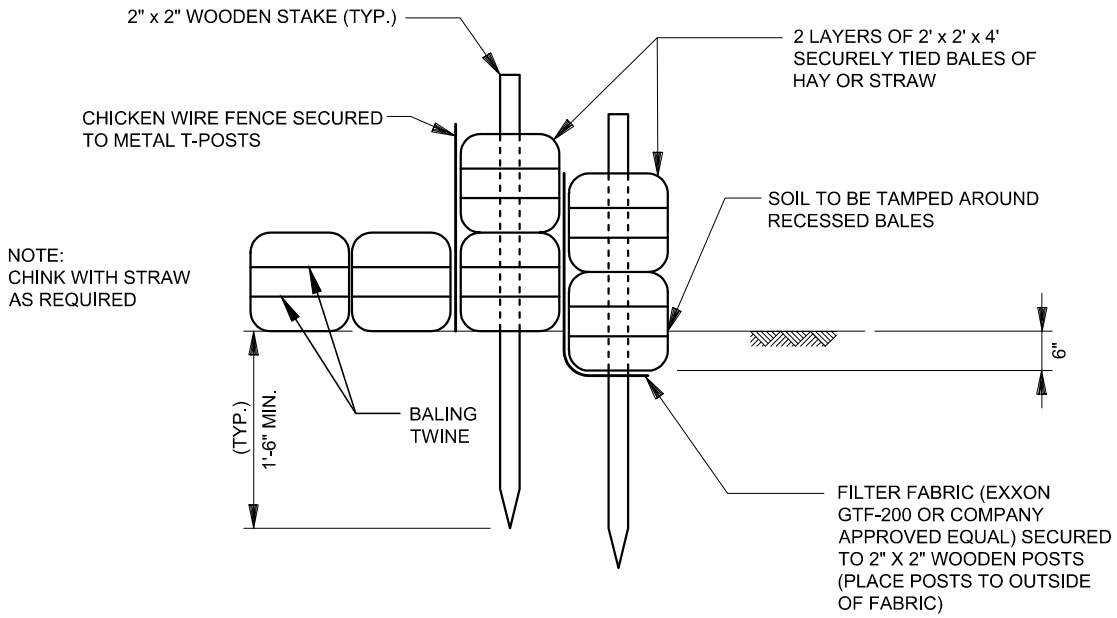

SECTION A-A

NOTE:
STAKES SECURING FILTER FABRIC AND CHICKEN WIRE FENCE ARE NOT SHOWN FOR CLARITY

NOTES:

1. STRUCTURE SHALL BE PLACED ON A LEVEL, WELL-VEGETATED SITE SUCH THAT WATER WILL FLOW AWAY FROM STRUCTURE AND ANY WORK AREAS.
2. FLOW RATES THROUGH DISCHARGE AND DIVERTER PIPES SHALL BE SUCH THAT THE DISCHARGE WILL NOT OVERTOP THE STRUCTURE.
3. WHERE CONDITIONS WARRANT A RECTANGULAR STRUCTURE MAY BE SUBSTITUTED FOR THE CIRCULAR CONFIGURATION SHOWN.
4. STRUCTURE SIZE MAY BE VARIED DEPENDING UPON SPECIFIC DEWATERING REQUIREMENTS
5. CONTRACTOR SHALL USE CERTIFIED WEED FREE STRAW FOR STRUCTURE.
6. BALES SHALL BE PLACED SUCH THAT TIES OR BALING TWINE IS NOT IN CONTACT WITH THE GROUND.

REFERENCE DRAWINGS	
DRAWING NO.	TITLE

HYDROSTATIC TEST
DEWATERING STRUCTURE
HDW

Williams WEST

FIGURE 11.2

REVISIONS						
NO.	DATE	BY	DESCRIPTION	W.O. NO.	CHK.	APP.
		RMP				

DRAWN BY: EE	DATE: 4-3-2017	ISSUED FOR BID:	SCALE: NONE
CHECKED BY:	DATE:	ISSUED FOR CONSTRUCTION:	
APPROVED BY:	DATE:	DRAWING NUMBER: STD-A-2-3049	SHEET 2 OF 2

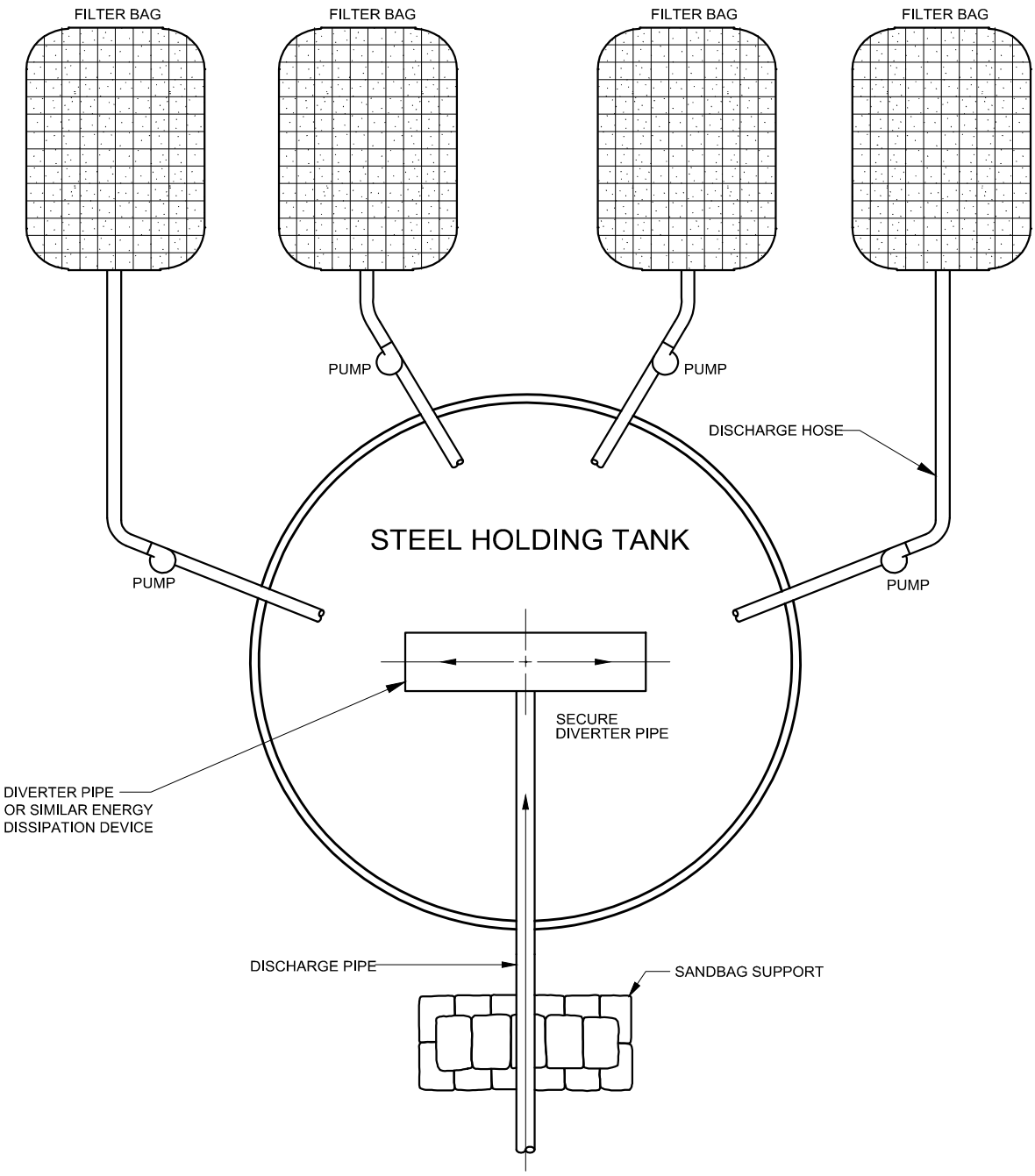

REFERENCE DRAWINGS	
DRAWING NO.	TITLE

HYDROSTATIC TEST DEWATERING STRUCTURE

HDW

Williams WEST

FIGURE 11.3

REVISIONS						
NO.	DATE	BY	DESCRIPTION	W.O. NO.	CHK.	APP.

DRAWN BY: EE	DATE: 4-3-2017	ISSUED FOR BID:	SCALE: NONE
CHECKED BY:	DATE:	ISSUED FOR CONSTRUCTION:	
APPROVED BY:	DATE:	DRAWING NUMBER:	SHEET 3 OF 3

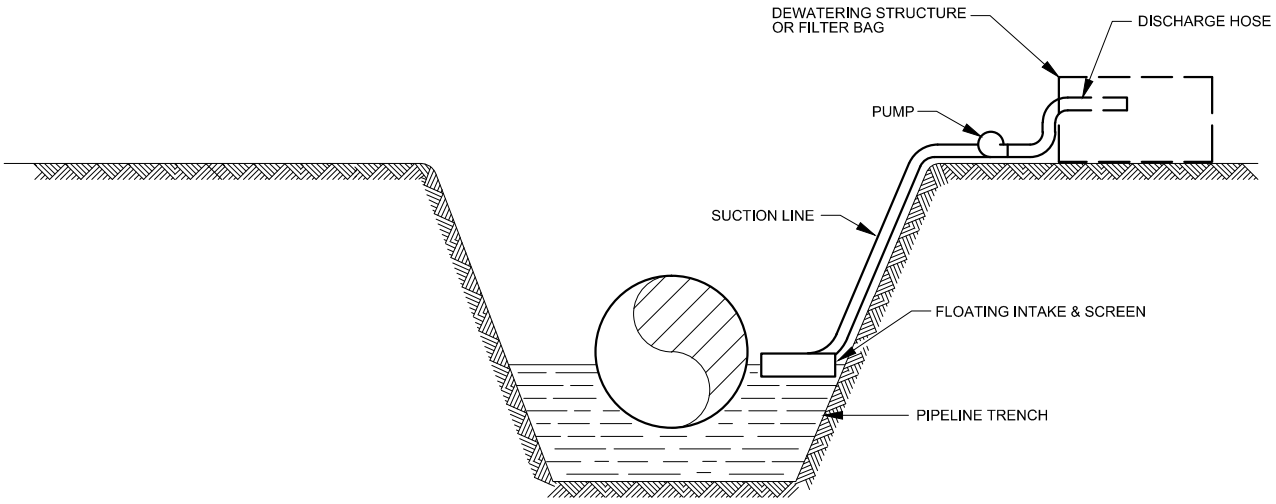

NOTES;

1. DEWATERING MEASURES/METHODS:
   - A. PUMP WATER TO A FILTERING STRUCTURE TYPICALLY CONSTRUCTED WITH STRAW BALES OR GEOTEXTILE AND DISCHARGE AS "SHEET FLOW" OUT OF STRUCTURE. (SEE SHT. 3)
   - B. PUMP WATER INTO A FILTER BAG. (SEE SHT. 2)
   - C. PUMP WATER TO A SETTLING TANK AND HAUL TO A DISPOSAL SITE.
   - D. PUMP WATER TO A SETTLING TANK AND DISCHARGE OVERLAND.
   - E. PUMP WATER TO A FILTERING STRUCTURE OR SETTLING TANK AND DISCHARGE TO APPROVED DRAINAGE OR CHANNEL.
   - F. TRANSFER WATER TO NEXT SECTION OF TRENCH.
   - G. INSTALL WELL POINTS AND PUMP TO FILTERING STRUCTURE AND DISCHARGE TO APPROVED DRAINAGE, OR CHANNEL.
   - H. INSTALL WELL POINTS AND DISCHARGE SHEET FLOW.
   - I. DISPOSE OF WATER COLLECTED IN TANK OR FILTRATION STRUCTURE BY AERATION OR THROUGH A SPRINKLER SYSTEM.
2. PUMP SHALL BE CONTROLLED SO THAT DISCHARGE DOES NOT OVERFLOW DEWATERING STRUCTURE.
3. PUMP SUCTION HOSE MUST NOT BE ALLOWED TO SET ON THE TRENCH BOTTOM. PROVISIONS MUST BE MADE TO ELEVATE THE SUCTION HOSE TO AT LEAST ONE FOOT ABOVE THE BOTTOM UNTIL BOTTOM DEWATERING IS NECESSARY.
4. WHERE POSSIBLE STRUCTURE SHALL BE PLACED ON A LEVEL, WELL-VEGETATED UPLAND SITE SUCH THAT WATER WILL FLOW AWAY FROM STRUCTURE AND ANY WORK AREAS.

REFERENCE DRAWINGS	
DRAWING NO.	TITLE

TRENCH DEWATERING

TDW

Williams WEST

FIGURE 12.1

REVISIONS						
NO.	DATE	BY	DESCRIPTION	W.O. NO.	CHK.	APP.
	10/22/2015					

DRAWN BY: EE	DATE: 4-3-2017	ISSUED FOR BID:	SCALE: NONE
CHECKED BY:	DATE:	ISSUED FOR CONSTRUCTION:	
APPROVED BY:	DATE:	DRAWING NUMBER: STD-A-2-3046	SHEET 1 OF 3

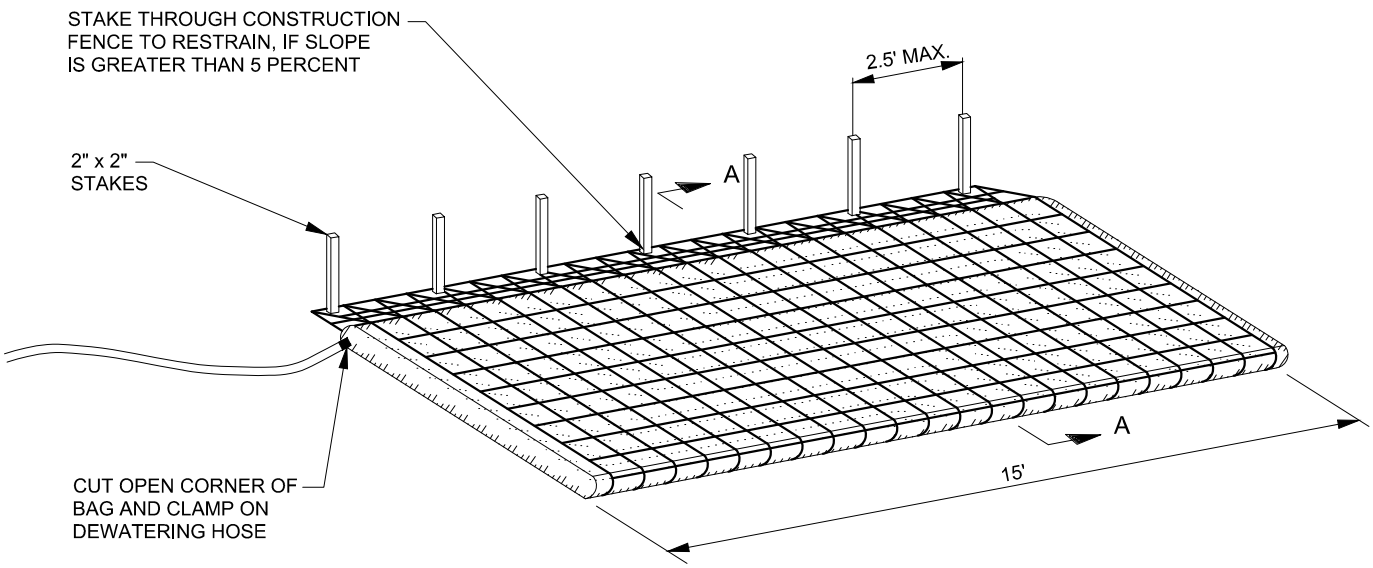

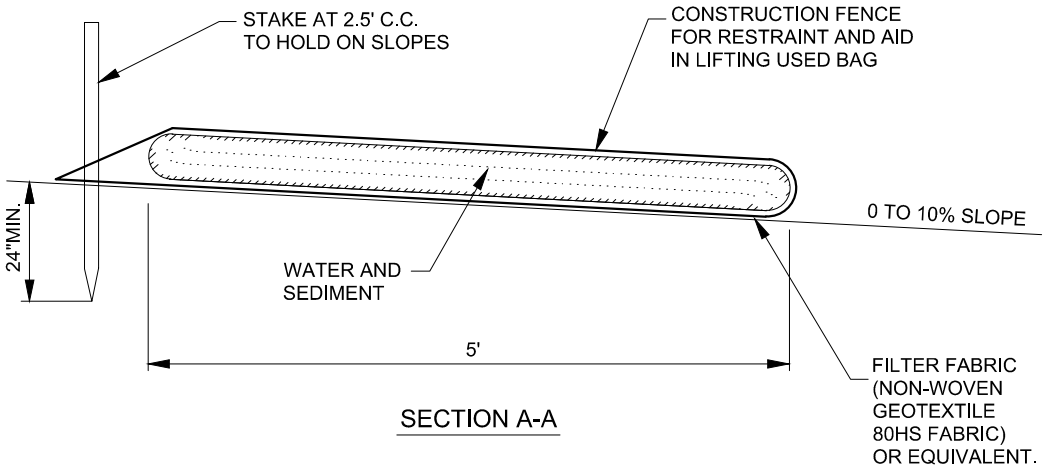

SECTION A-A

NOTES:

1. WHERE POSSIBLE STRUCTURE SHALL BE PLACED ON A LEVEL, WELL-VEGETATED UPLAND SITE SUCH THAT WATER WILL FLOW AWAY FROM STRUCTURE AND ANY WORK AREAS.
2. THE FILTER BAG MUST BE STAKED IN PLACE AND SECURED TO THE PUMP DISCHARGE LINE.
3. FILTER BAG SHALL NOT BE USED FOR DISCHARGE FLOWS GREATER THAN 300 GPM.
4. DEVICE SHALL BE REMOVED AND DISPOSED OF AFTER BAG IS FILLED WITH SEDIMENT. SEDIMENT FROM BAG SHALL BE SPREAD IN AN UPLAND AREA OR DISPOSED OF PROPERLY.
5. FILTER BAG MUST BE MONITORED DURING DEWATERING ACTIVITIES TO PREVENT OVERFILLING AND/OR RUPTURE.

REFERENCE DRAWINGS	
DRAWING NO.	TITLE

TRENCH DEWATERING - FILTER BAG

TDW

Williams WEST

FIGURE 12.2

REVISIONS						
NO.	DATE	BY	DESCRIPTION	W.O. NO.	CHK.	APP.

DRAWN BY: EE	DATE: 4-3-2017	ISSUED FOR BID:	SCALE: NONE
CHECKED BY:	DATE:	ISSUED FOR CONSTRUCTION:	
APPROVED BY:	DATE:	DRAWING NUMBER: STD-A-2-3046	SHEET 2 OF 3

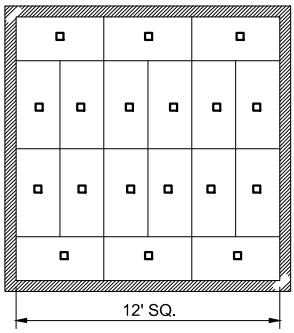

STEP 1

ARRANGE STRAW BALES OVER FILTER FABRIC ON LEVEL LAND TIGHTLY PACKED AS SHOWN TO COVER AN AREA APPROXIMATELY 12' x 12'. SECURE EACH HAYBALE IN PLACE BY DRIVING REBAR OR A WOODEN STAKE THROUGH EACH OF THE HAY BALES

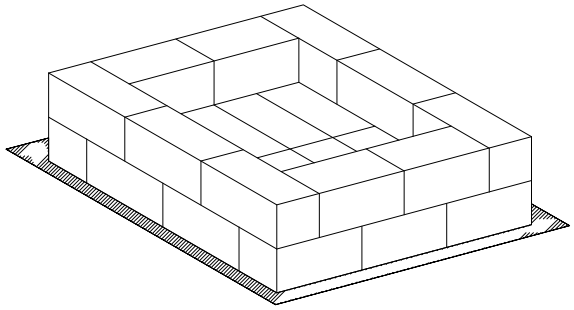

STEP 2

INSTALL ANOTHER LAYER OF STRAW BALES ON THE OUTER EDGE AS SHOWN

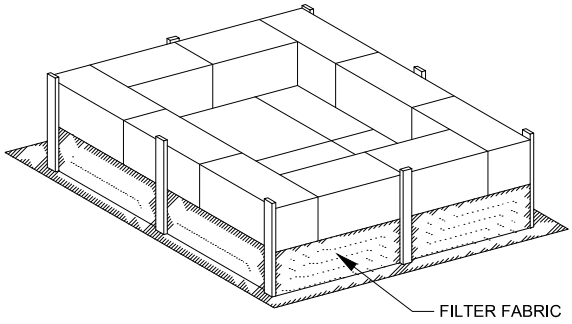

STEP 3

INSTALL FILTER FABRIC ALL AROUND STRAW BALE STRUCTURE AS SHOWN

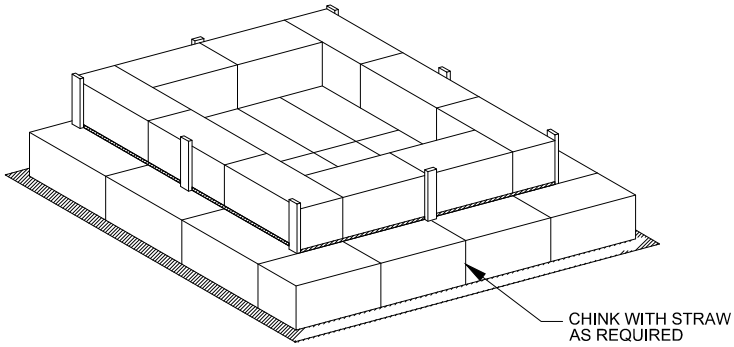

STEP 4

INSTALL ANOTHER LAYER OF STRAW BALES ON THE OUTSIDE OF THE FILTER FABRIC AND SECURE IN PLACE BY DRIVING REBAR OR A WOODEN STAKE THROUGH EACH OF THE OUTER STRAW BALES. STAKES WILL BE DRIVEN A MINIMUM OF 18" INTO GROUND.

NOTES;

1. WHERE POSSIBLE STRUCTURE SHALL BE PLACED ON A LEVEL, WELL-VEGETATED UPLAND SITE SUCH THAT WATER WILL FLOW AWAY FROM STRUCTURE AND ANY WORK AREAS.
2. IF SUBSTANTIAL VEGETATED AREA IS AVAILABLE, THE DEWATERING STRUCTURE WILL NOT BE REQUIRED PROVIDED THE FOLLOWING PRECAUTIONS ARE TAKEN:
   - A. A PERFORATED PVC PIPE OUTLET IS ATTACHED TO PUMP FOR A MORE GRADUAL RELEASE OF WATER.
   - B. AN ADEQUATE LENGTH OF FILTER FABRIC WITH ROCK FILTER OUTLETS IS LOCATED DOWNSLOPE OF PUMP DISCHARGE.
3. THIS MEASURE SHALL BE REMOVED UPON COMPLETION OF THE PROJECT. REMOVAL IS NOT CONTINGENT UPON ESTABLISHMENT OF PERMANENT VEGETATION. MATERIAL FROM BALES MAY BE SCATTERED ON THE DISTURBED WORK AREAS.
4. CONTRACTOR SHALL USE CERTIFIED WEED FREE STRAW FOR STRUCTURE.

REFERENCE DRAWINGS	
DRAWING NO.	TITLE

TRENCH DEWATERING - STRAW BALE STRUCTURE

TDW

Williams WEST

FIGURE 12.3

REVISIONS						
NO.	DATE	BY	DESCRIPTION	W.O. NO.	CHK.	APP.

DRAWN BY: EE	DATE: 4-3-2017	ISSUED FOR BID:	SCALE: NONE
CHECKED BY:	DATE:	ISSUED FOR CONSTRUCTION:	
APPROVED BY:	DATE:	DRAWING NUMBER: STD-A-2-3046	SHEET 3 OF 3

ATTACHMENT B

SPILL PLAN FOR OIL AND HAZARDOUS MATERIALS

Spill Plan for Oil and Hazardous Materials

North Fork Nooksack Line Lowering Project
Whatcom County, Washington

TABLE OF CONTENTS

SECTION 1 - GENERAL INFORMATION.....3

1.1 Project Location & Description 3

SECTION 2 - FACILITY DRAINAGE & SPILL PREVENTION PRACTICES 4

2.1 Drainage Patterns..... 4

2.2 Spill Prevention Practices..... 4

SECTION 3 - EMERGENCY SPILL RESPONSE PROCEDURES 5

3.1 Contractor Responsibilities..... 5

3.2 Company Responsibilities 6

3.3 Emergency Contacts 6

3.4 Duties of Chief Inspector (or Assistant District Manager)..... 6

SECTION 4 - EMERGENCY SPILL RESPONSE AND PERSONNEL PROTECTION EQUIPMENT.....6

SECTION 5 - SPILL NOTIFICATION PROCEDURES.....7

5.1 Internal Notifications..... 7

5.2 External Notifications..... 7

5.3 Emergency Spill Response Contractors 8

5.4 Local Emergency Response Teams..... 8

SECTION 6 – CLEAN-UP PROCEDURES 9

6.1 Spills…..... 9

6.2 Equipment Cleaning/Storage..... 9

6.3 Waste Disposal……..…9

APPENDIX A

List of Emergency Contacts

APPENDIX B

Emergency Spill Response and Personnel Protection Equipment

SPILL PLAN FOR OIL AND HAZARDOUS MATERIALS

SECTION 1 - GENERAL INFORMATION

1.1 Project Location & Description

This Spill Plan for Oil and Hazardous Materials was developed for the following construction project:

North Fork Nooksack Line Lowering Project
Whatcom County, WA

Northwest's scope-of-work for this project includes lowering by replacement of approximately 1,700 feet of 30-inch pipeline and the removal of approximately 1,550 feet of previously abandoned in place 26-inch pipeline, which will become exposed during the replacement of the 30-inch pipeline. The 30-inch pipeline will be replaced in the north floodplain between mileposts (MPs) 1468.46 and 1468.78.

Prior to conducting any remote work along the right-of-way, the Contractor shall be familiar with this Spill Plan and its contents.

This Spill Plan will be followed to prevent any spills that may occur during the project from entering any waterway and to mitigate any spills that do occur.

Company representatives assigned to this project include:

Chief Inspector (CI):	*(to be completed by Williams)*
District Manager (DM):	Tyson Green
Environmental Inspector (EI):	*(to be completed by Williams)*
Environmental Compliance:	Caleb Vickery
Environmental Permitting:	Toby Schwalbe

SECTION 2 - DRAINAGE PATTERNS AND SPILL PREVENTION PRACTICES

2.1 Drainage Patterns

The numerous drainage patterns along the right-of-way's work corridor vary due to site-specific terrain conditions. As a result, the Contractor shall always implement Best Management Practices based on site-specific observations that are continuously made during construction. These measures shall minimize off-site impacts should a spill and/or release occur.

2.2 Spill Prevention Practices

The Contractor shall take the following precautions to ensure that an oil or hazardous materials spill does not occur or if one does, it does not enter any waterway:

a) Containers

(1) Any containers shall be stored on level ground at least 100 feet from the nearest waterway. Additionally, all containers should be located within temporary containment.

(2) Temporary containment will include, but not be limited to, temporary hay bale berms with plastic sheets underlining the entire contained area.

(3) Containment areas shall be capable of containing 110% of the volume of hazardous materials being stored.

(4) All container storage areas shall be routinely inspected for integrity purposes.

(5) Leaking and/or deteriorated containers shall be replaced as soon as the condition is first detected with clean-up measures immediately taking place.

(6) No incompatible materials shall be stored in the same containment area.

(7) No container storage areas shall be left unattended during non-work hours.

b) Tanks

(1) The Contractor shall operate only those tanks that meet the requirements and specifications of applicable regulations and that are surrounded with temporary containment as described above.

(2) Self-supporting tanks shall be constructed materials compatible with its contents.

(3) All tanks shall be routinely inspected for integrity purposes.

(4) Vehicle mounted tanks shall be equipped with flame/spark arrestors on vents to ensure that self-ignition does not occur.

(5) Tanks will not be used to store incompatible materials in sequence unless first thoroughly decontaminated.

(6) Any tank utilized for storing different products between construction locations will be thoroughly decontaminated prior to refilling.

c) Unloading/Loading Areas

(1) Re-fueling and transferring of any liquids shall only occur in pre-designated locations that are on level ground and at least 100 feet from any waterway. Where conditions require construction equipment (e.g., backhoes, trench dewatering pumps or hydrostatic test water discharge pumps) be re-fueled within 100 feet of any waterway, this activity must be continuously manned to

ensure that overfilling, leaks or spills do not occur. In addition, all this equipment must be surrounded by temporary containment as described above.

(2) All service vehicles used to transport fuel must be equipped with an appropriate number of fire extinguishers and an oil spill response kit. At a minimum, this kit must include:

- Ten, 48”x 3” oil socks
- Five, 18” x 18” oil pillows
- One, 10’x 3” oil booms
- Twenty-five, 24” x 24”oil mats/pads
- 1 box garden-size, 6-mil, disposable polyethylene bags (w/ ties)
- 4 pair of oil-proof gloves
- One, 55-gallon PE open-head drum
- Blank drum labels
- 2 shovels

SECTION 3 - EMERGENCY RESPONSE PROCEDURES

This section provides a generic description of emergency response procedures to be performed to address oil and hazardous materials spills at the job site. Each response will vary depending upon the nature and extent of the incident. However, the general procedures outlined below will be followed.

3.1 Contractor Responsibilities

(1) The Contractor must designate both an Emergency Coordinator (EC) and an Alternate EC for the project.

(2) The Contractor is responsible for appropriately addressing all spills that occur directly as a result of construction-related activities.

(3) For de minimus spills (spills that take less than a shovel-full of dirt to clean-up), no internal notification requirements of this Plan need to be followed. However, this does not relieve the Contractor from appropriately cleaning up the area.

(4) The Contractor shall supply the necessary manpower, PPE, and spill response equipment to appropriately address all spills that directly occur as a result of construction-related activities.

(5) Ensure that all emergency spill response equipment and PPE is well-stocked and kept in good condition. Replace any materials when necessary.

(6) If the situation warrants it, the Contractor shall immediately notify any local emergency responders for assistance.

(7) The Contractor shall be responsible for contracting an outside emergency spill response team if the nature of the emergency incident requires it.

(8) The Contractor is responsible for immediately notifying the CI (or DM) of any non-de minimus spills.

3.2 Company Responsibilities

(1) Company shall be responsible for ensuring that the Contractor adequately follows the procedures outlined in this Plan at all times.

(2) Company shall be responsible for all verbal and written external notifications made to any regulatory agency or any local emergency responders.

3.3 Emergency Contacts

Appendix A provides a list of Company and Contractor emergency contacts.

3.4 Duties of Chief Inspector (or District Manager)

The duties of the CI (or DM) include the following:

(1) Determine the source, character, amount, and extent of the spill.

(2) Assess the potential hazards to the job site, environment, and surrounding community.

(3) Evacuate the area if necessary.

(4) Report the spill in accordance with the Internal Notification Procedures outlined in Section 5.1 and the External Notification Procedures outlined in Section 5.2.

(5) Commit manpower and equipment for minor incidents that can be reasonably remediated by the Contractor.

(6) Oversee Contractor's spill response efforts to contain and control all spills to ensure they adequately follow the procedures outlined in this Plan.

(7) Document the Contractor's response efforts, including taking photographs whenever possible.

(8) Generate an Emergency Incident Report (WIMS 11.05.00.01 – SOC Release Data Collection Form).

SECTION 4 - EMERGENCY SPILL RESPONSE AND PERSONNEL PROTECTION EQUIPMENT

Appendix B provides a list of the minimally-required Emergency Spill Response Equipment and Personnel Protection Equipment (PPE) for this project. This is in addition to the minimally-required spill response equipment previously specified in Section 2.2(c)(2).

SECTION 5 - SPILL NOTIFICATION PROCEDURES

5.1 Internal Notifications

All non-de minimus spills are to be immediately reported to the CI (or DM) who will contact Gas Control and/or Environmental Compliance. Appendix A includes a list of emergency contacts.

An Emergency Incident Report (WIMS 11.05.00.01 – SOC Release Data Collection Form) must be forwarded to Environmental Compliance as soon as technically feasible by the CI (or DM). Environmental Compliance will determine if the spill constitutes a:

(1) Reportable Quantity under CERCLA,

(2) Reportable release under the Clean Water Act or RCRA, or

(3) Reportable Threshold Quantity under SARA Title III

If any reporting is necessary, Environmental Compliance shall be responsible for immediately contacting the appropriate federal and state regulatory authorities and following-up in writing, if required.

5.2 External Notifications

Any non-de minimus spills that may pose a threat to human health or the environment shall be immediately reported to the CI (or DM) who will contact the Local Emergency Planning Committee (LEPC) if necessary. When determining if the LEPC should be contacted or not, any gas release to the atmosphere must be taken into consideration.

The appropriate LEPC is:

Name:	John Gargett (Whatcom County Sheriff's Office Division of Emergency Management)
Organization:	Whatcom Unified Local Emergency Planning Committee Coordinators
Phone Number:	360/778-7160

Environmental Compliance is responsible for submitting any required written follow-up notifications to the LEPC or any local emergency responders.

5.3 Emergency Spill Response Contractors

Company has arrangements with several emergency spill response contractors to address emergency responses beyond the capabilities of the Contractor.

If necessary, the following firms could be utilized for this project:

Company:	PSC Emergency Spill Response
Name:	Jeff Kacirek – Emergency Response Division
Location:	24-hour nation-wide response
Phone Number:	877/577-2669

Company:	CCS – Emergency Response Division
Name:	Todd Partridge
Location:	Longview, WA
Phone Number:	360/423-6316 888/423-6316

5.4 Local Emergency Response Teams

The Contractor or the CI (or DM) may call the following local emergency responders should their assistance be required:

Service	Organization Name	Telephone Number
Emergency Medical Services	Ambulance	911
Hospital	PeaceHealth St. Joseph Medical Center	360/734-5400
Fire Department	Whatcom County – All Districts	911
Police Department	Whatcom County Sheriff	360/778-6600

SECTION 6 – CLEAN-UP PROCEDURES

The following section outlines specific procedures to be followed when addressing spills:

6.1 Spills

(1) Small spills and leaks must be remediated as soon as feasible. Use adsorbent pads wherever possible.

(2) Restrict spills to the containment area if possible by stopping or diverting flow.

(3) If the spill exceeds the containment structure's capacity, immediately construct additional containment using sandbags or fill material. Every effort must be made to prevent the spill from entering any waterway.

(4) If a spill does reach a waterway, immediately place oil booms downstream in order to contain the material. As soon as possible, remove the floating layer with absorbent pads.

(5) After all recoverable oil has been collected and drummed, place all contaminated PPE, spill clean-up equipment, and any impacted soil into appropriate drums.

(6) For significant quantities of impacted soils, construct temporary waste piles using plastic sheets. This material should subsequently be transferred into lined roll-off boxes as soon as feasible.

(7) Environmental Compliance will coordinate all waste characterization and disposal activities.

6.2 Equipment Cleaning/Storage

(1) Upon completion of remedial activities, the Contractor shall be responsible for decontaminating the used emergency response equipment as well as the PPE.

(2) The Contractor shall be responsible for replacing any spent emergency response equipment and PPE prior to resuming construction-related activities.

(3) Decontamination rinse fluids shall be collected and containerized. Environmental Compliance will coordinate waste characterization and disposal activities.

(4) Reusable personnel protection equipment will be tested and inventoried prior to being placed back into service.

6.3 Waste Disposal

The Contractor is responsible for waste management and waste disposal; however, Environmental Compliance will coordinate all waste characterization, profiling, and disposal activities.

APPENDIX A

LIST OF EMERGENCY CONTACTS

Company:	Job Description	Phone Number
GAS CONTROL	**Salt Lake City**	**801/584-6574 (24-hrs)**
(to be completed by Williams)	**Chief Inspector**	*(to be completed by Williams)*
Tyson Green	**District Manager**	**360/594-2137 (m)** **360/988-2261 (o)**
(to be completed by Williams	**Environmental Inspector**	*(to be completed by Williams*
Caleb Vickery	**Environmental Compliance**	**801/554-8112 (m)** **801/584-6933 (o)**
Toby Schwalbe	**Environmental Permitting**	**801/209-6047 (m)** **801/584-6751 (o)**

Contractor:	JOB DESCRIPTION	Phone Number
(to be completed by Contractor)	**EMERGENCY COORDINATOR**	*(to be completed by Contractor)*
(to be completed by Contractor)	**Alternate EMERGENCY COORDINATOR**	*(to be completed by Contractor)*

Regulatory Agencies:	Name	Phone Number
	National Response Center	**800/424-8802**
	Environmental Management Dept. (EMD)	**800/258-5990**

APPENDIX B

EMERGENCY SPILL RESPONSE AND PERSONNEL PROTECTION EQUIPMENT

Equipment	Quantity	Location
(1) chemical spill kit	**	Strategically located along the right-of-way and adjacent to work space/waterbodies
(2) oil spill kit	**	Strategically located along the right-of-way and adjacent to work space/waterbodies

EMERGENCY SPILL RESPONSE EQUIPMENT:

(1)	1 bag loose chemical pulp	3 chemical pillows (18” x 18”)
	3 chemical socks (48” x 3”)	10 chemical mats/pads (24” x 24”)
	1 box garden-sized, 6-mil, disposable, polyethylene bags (w/ ties)	
	Blank waste labels	one 30-gallon PE open-head drum
	2 shovels	

(2)	1 oil boom (100’ x 3”)	10 oil pillows (18” x 18”)
	10 oil socks (48” x 3”)	25 oil mats/pads (24” x 24”)
	1 box garden-sized, 6-mil, disposable, polyethylene bags (w/ ties)	
	Blank waste labels	three, 55-gallon PE open-head drums
	4 shovels	

**** The appropriate quantity of spill kits for the project shall be determined and based on site-specific observations that are continuously made during construction. This emergency spill response equipment, in addition to the BMPs implemented in Section 2.1 of this Spill Plan, shall minimize off-site impacts should a spill and/or release occur.**

PERSONNEL PROTECTION EQUIPMENT:

The inventory of PPE should include enough for at least 4 responders reacting to a spill.

Splash goggles, half-face respirators (w/ cartridges for benzene),
Tyvek suits, nitrile gloves, waterproof/ chemical resistant hip-waders

ATTACHMENT C

FISH EXCLUSION AND RELOCATION PLAN

TECHNICAL MEMORANDUM

Date:	March 18, 2017
To:	Toby Schwalbe, Senior Environmental Scientist, Williams - Northwest Pipeline LLC
From:	Sarah Sandstrom, Fisheries Biologist, CFP

Subject: Fish Exclusion and Relocation Plan – Northwest Pipeline LLC, North Fork Nooksack Line Lowering Project

This memorandum describes the fish exclusion and relocation plan for the Northwest Pipeline LLC's (Northwest), North Fork Nooksack Line Lowering Project (Project). This Fish Exclusion and Relocation Plan (Plan) addresses the handling, removal and relocation of fish that may be present during dewatering activities associated with construction of the Project. This area includes Jim Creek and two other tributaries to Jim Creek. The Project and resulting area requiring dewatering to install the new 30-inch pipeline also includes a complex floodplain wetland mosaic, with areas of ponded water that may support fish life.

Equipment and Capture Methods

1. Dip nets, seines, and block nets composed of soft (non-abrasive) nylon material will be used. Seines and block nets are typically 9.5 millimeters or 0.37 inches stretched mesh. Woven wire screens (mesh size <1/8") may be substituted for block nets at channel isolation areas.

2. Sanctuary dip nets will be used for handling ESA species to limit stress. Aquarium nets may be used if water depths in remaining pools are very shallow and/or fish are concentrated in very small receding pools or coarse substrate; however, once netted, fish must remain in water until transferred to a holding container.

3. Baited gee minnow traps will be used in conjunction with seining in isolated areas. Cured salmon roe is a preferred bait; however, alternative bait may be used.

4. Electrofishing will only be used after all other means of fish capture have been exhausted (e.g., a minimum of three complete passes of the seine without fish capture); and provided electrofishing methods and equipment comply with NMFS' Backpack Electrofishing Guidelines (NMFS 2000).

5. Temporary holding buckets will be maintained with adequate freshwater to minimize stress to fish.

Fish Handling, Holding and Release

1. Fish relocation operations will only be conducted by or under the direct supervision of an American Fisheries Society-Certified Fisheries Professional trained and experienced in such efforts. Adequate numbers of trained and experienced personnel shall be present to conduct fish capture and relocation. All fish relocation, handling, holding, and release activities will be consistent with federal and state Project permits (i.e. Biological Opinion and Hydraulic Project Approval).

2. Fish handling will be kept to the minimum necessary to remove fish from the work site. Other species encountered during fish relocation, such as amphibians, crustaceans, and mollusks will be relocated in a manner similar to that described for fish.

3. Individuals handling fish will ensure that their hands are free of sunscreen, lotion, or insect repellent and bare skin will be wetted to avoid drying out fish skin at points of contact and increasing potential for fungal or other skin lesions.

4. Fish removal personnel shall provide a healthy shaded environment for fish with minimum holding periods and low fish densities in holding containers to avoid effects of overcrowding. Supplemental battery-powered air bubblers shall be used as needed. Holding container temperature and well-being of specimens will be frequently monitored to assure that individuals are released unharmed.

5. In general, fish will be released downstream from the Project area into suitable habitats in Jim Creek or the North Fork of the Nooksack River (NF Nooksack). This will ensure that fish are able to access adequate freshwater and move away from the Project area. ESA-listed or proposed fish will have priority over other species for release. Large fish shall be kept separate from smaller fish to avoid potential predation during containment. One person shall be designated to transport specimens in a timely manner to the site selected for release.

Sequence

The sequencing of fish exclusion and fish relocation will occur as follows:

1. A pre-construction habitat assessment will occur prior to initiating the Project's Groundwater Management/Dewatering Program. The purpose of this assessment is to effectively design/plan the fish exclusion areas necessary at the time of construction by identifying the location and extent of the stream channels that require fish exclusion structures (cofferdams/barriers and block nets) to temporarily exclude fish from entering the Project area. The pre-construction habitat assessment will also determine the manpower needs necessary to efficiently complete the fish exclusion and relocation activities successfully.

2. Biologists will review the area surrounding the proposed Project area prior to dewatering activities to identify other sources of surface flows into Jim Creek and surrounding wetlands. Biologists will also identify beaver dam locations within and downstream of the Project area that would potentially be dewatered as part of the Project's Groundwater Management/Dewatering Program.

3. Woven wire screens or block nets shall be established across upstream sources of surface water to prevent upstream fish from entering the Project area (locations anticipated are shown in Figure 1). Screens will not be added downstream until later in the fish removal process in order to herd the fish out first; then the downstream screens will be set in place. Fish screens shall be established far enough upstream from Project activities that areas upstream from the screens will not be dewatered[1]. Sites will be selected based on desirable attributes such as slower flows and without heavy vegetation, undercut banks, or deep pools so that the screen or block net seals off the work area to the maximum extent possible. Screens and block nets should be set to establish a seal between the bed and banks to prevent fish from passing. Screens and block nets will require periodic inspection and maintenance throughout the construction period to address incidental damage and prevent debris from rendering the screens impermeable to flows. Inspection and maintenance timing will vary depending on upstream flows and amount of debris, but should occur every six hours at a minimum, by Northwest's Environmental Inspector (EI).

[1] This distance will be determined based on engineering estimates from Northwest or its Contractors. This fish exclusion and removal plan assumes that pumping impacts to fish will be limited to areas of Jim Creek and surrounding wetlands, and that pumping will avoid dewatering impacts to the NF Nooksack.

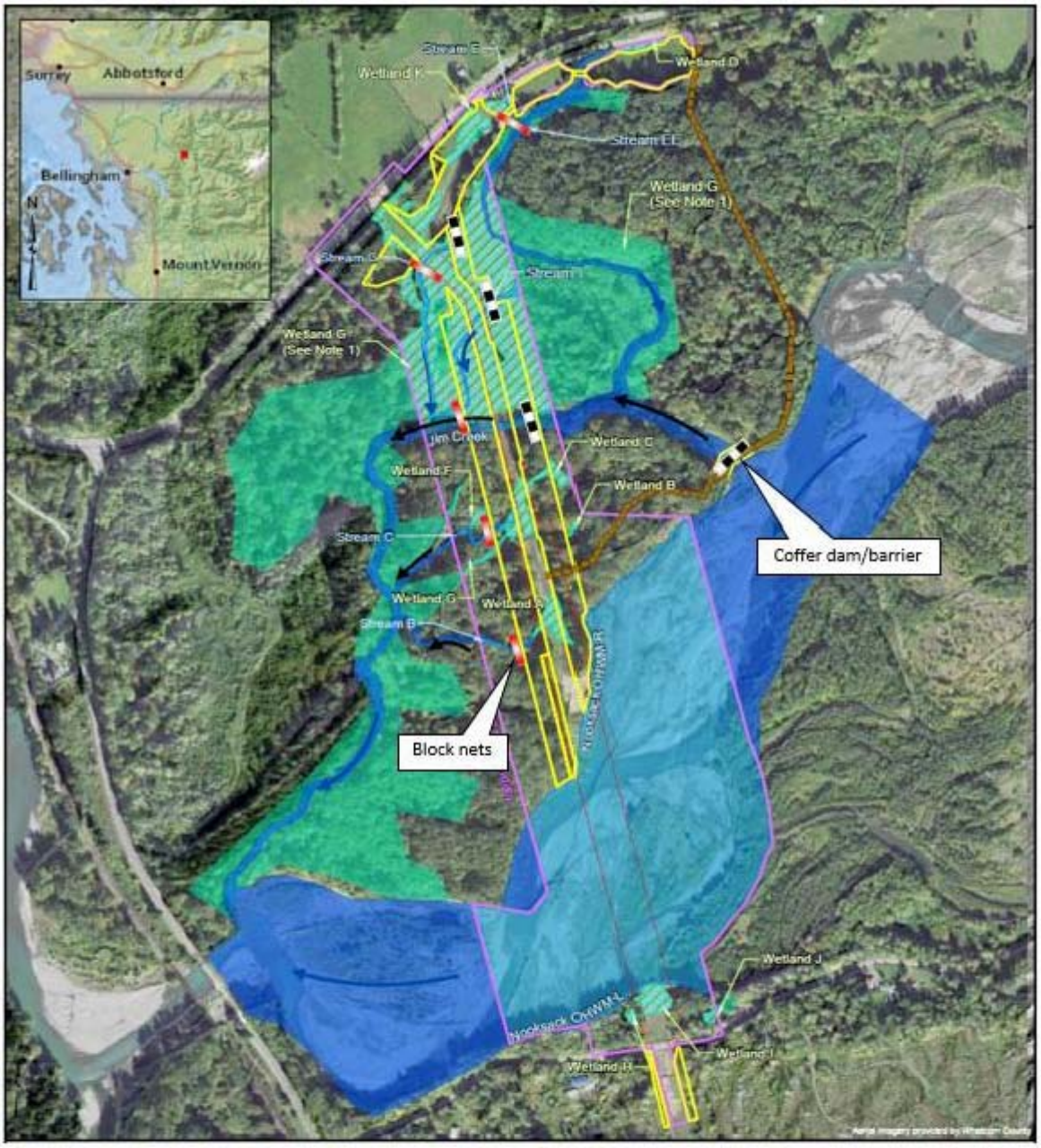

Figure 1: Proposed location of block nets and cofferdam (black and white) and block net only (red and white). Number and locations of coffer dams and block nets may be modified once extent of likely dewatering is finalized.

- Proposed Construction Footprint
- Environmental Study Area (extent of delineation)
- Cofferdam and block net
- Block net only

Figure 1
Possible Locations of Coffer Dams and Block Nets

4. Immediately prior to dewatering, beaver dams downstream or within the Project area will be gradually dismantled and removed. Dismantling work will begin at the farthest upstream dam within the Project area so that surface waters are gradually lowered and resulting turbidity is minimized. All dam material will be either floated downstream or cast aside within the floodplain area. During dam deconstruction activities, a biologist will monitor upstream areas to ensure that fish are not stranded as water levels drop. This dropping of water levels is intended to encourage volitional downstream movement by fish out of the affected area. Where beaver dams occur upstream and beyond the Project area, those dams would be retained with the intent that the dams will provide additional support for maintenance of adequate water levels for fish life in these upstream areas. All beaver dam removal activities will be consistent with conditions in the Hydraulic Project Approval to be issued for the Project..

5. Following beaver dam removal, but prior to commencement of pumping activities, all connected surface waters shall be seined in an upstream to downstream direction. This seining effort is intended to herd fish out of the Project area. This will occur using pole seines operated by at least two people (three is preferred) slowly moving a seine stretched across the edges of the wetted perimeter. A block net will be positioned at the downstream end of the affected reach of Jim Creek to prevent fish from returning to the upstream area. The downstream block net will be temporarily removed at the end of each seining pass to allow herded fish to escape the affected area. All areas of connected surface waters will be seined at least once prior to the start of dewatering activities.

   Baited minnow traps will be placed in isolated surface waters (minimum spacing of one trap per 50 square meters of isolated ponded area). Minnow traps may be left in place overnight, but at a minimum shall be checked three times daily or more frequently if water temperatures are in excess of 15 degrees Celsius.

6. Where the pipeline trench intersects a stream channel that contains flowing water, the stream channel will be isolated and bypassed. The Contractor will establish cofferdams (sandbags, rock, geotextile fences, etc.) across high-flow connections between the NF Nooksack and Jim Creek (diversion locations anticipated are shown in Figure 1). The type and height of cofferdams will be adequate to prevent flow from entering Jim Creek during anticipated high flow events in the NF Nooksack. Flows from the NF Nooksack only enter Jim Creek during high flow events. Isolation of fish will occur through a combination of coffer damming at the upstream end of the work area and establishing screening or block netting upstream of the cofferdam (see description of installation and maintenance above). A cofferdam may also be placed downstream of the work area if needed. Any stream flows will be pumped around the work area as necessary. Pumps shall be screened according to NMFS/WDFW standards to prevent entrainment of aquatic species and protection shall be in place at discharge locations to prevent potential erosion and turbidity.

7. Once initial herding efforts are completed and minnow traps are removed from isolated pools, initial stream bypass measures will commence. Bypass pumps at each of the contributing stream channels will begin slowly lowering flows in the Project area as biologists continue fish removal efforts. During this initial bypass period, biologists will continue to seine remaining surface waters. Seining efforts in connected waters will continue to focus on herding fish downstream and out of the Project area. When a seining crew reaches a downstream block net site, the downstream block net will be temporarily removed to allow herded fish to escape the affected area, and the net will be reset immediately upstream from the seining crew. In disconnected areas, dip nets and seine nets will be used to collect and relocate any remaining fish. Fish collection and relocation will be limited to periods between sunrise and sunset when there is sufficient light to safely inspect dewatered areas and isolated pools for trapped and stranded fish and to safely and efficiently remove them.

Once all areas within the project area have been seined a minimum of three times *and* no live fish are observed or captured in seining efforts, trench dewatering operations will commence. Once begun, dewatering operations will continue until backfilling of the trench is complete. Biologists will be present during this first day of trench dewatering to monitor remaining pools for signs of fish life and to salvage any remaining fish. Fish salvage materials, including dip nets and buckets with freshwater will be on hand throughout construction operations in case additional fish are encountered.

8. Should any of the isolated work areas become re-watered before work is completed (such as breaching of isolation damming due to high flows or runoff from excessive precipitation), biologists will again conduct fish removal and relocation using methods described above and they will apply those methods to excavations/impoundments on site which may have collected/entrapped fish. In such a circumstance, pumping will continue simultaneously with fish removal efforts.

9. Once the trenched area is backfilled and primary restoration is complete, isolation dams will be removed but screens and block netting will remain temporarily. This will limit fish from entering the construction area when water first flows over the site and turbidity is most likely. Upstream and downstream screens and block nets will be removed once turbidity has returned to background levels.

Documentation

1. All work area isolation, fish removal and fish release activity shall be thoroughly documented in a logbook with the following information: Project location, date, methods, personnel, electrofisher settings (if used), and other comments (see attached).

2. Estimates of species, number of each species, and age class, as well as release location will be recorded for all fish handled.

3. Information regarding injuries or mortalities to ESA-listed or proposed species will be documented and provided to NMFS or USFWS and WDFW if appropriate, depending on which agency has jurisdiction over that species, within a timeframe specified by each agency.

Fish Relocation Log- Northwest Pipeline LLC, North Fork Nooksack Line Lowering Project

Date_____ Project Location _____

Staff_____ Fish Relocation Method (Circle one: Seine / Minnow Trap / Dip Net / Electrofishing)

Pass #/ Minnow Trap #	Electrofish settings (if used	Species										Release Location	Comments/notes (condition on release)
		Age Class											

ATTACHMENT D

MARBLED MURRELET HABITAT ASESSMENT

February 24, 2017

Dan Duce
Edge Environmental Inc.
Lakewood, CO 80228
303-988-8844

RE: Marbled Murrelet Habitat Assessment for the North Fork Nooksack Project

On February 9th, 2017, Hamer Environmental was contracted by Edge Environmental Inc. to conduct a Marbled Murrelet Habitat Assessment for the Northwest Pipeline Nooksack project that is owned and operated by Williams, Inc.. The section of the pipeline that was contracted to be surveyed was located along the North Fork Nooksack River in Deming, Washington, just east of the confluence of the North Fork/South Fork Nooksack Rivers. A map of the survey area is provided in Figure 1. The project footprint area within the red boundary is the construction right-of-way and Temporary Extra Work Areas (TEWA's) (16.98 acres), while the area within the yellow boundary is the Environmental Survey Area (89.09 acres). The project area contains a mixture of private, state, and tribal-owned lands (Figure 2).

Habitat Assessment Results

A complete Marbled Murrelet Habitat Assessment was conducted by Matt Reed of Hamer Environmental on February 14th and 15th, 2017. The Habitat Assessment was conducted according to the guidelines set forth in the Washington State Forest Practice Rules (WAC 222-12-090(15)) for private landowners, which includes identifying and locating potential nesting platforms found in conifer trees that are at least 32 inches in diameter at breast-height (DBH). The project area is mostly private, but does contain some Washington State-owned lands (Figure 2). The definition of Marbled Murrelet nesting platforms on Washington State lands is slightly different than what is outlined in the Washington State Forest Practice Rules in that coniferous trees containing potential nesting platforms can be less than 32 inches in DBH. For the purposes of this habitat assessment, coniferous trees containing potential Marbled Murrelet nesting platforms were identified according to the corresponding state or private land guidelines.

In total, 53 coniferous trees were identified as containing potential Marbled Murrelet nesting platforms. The total potential platform count was 288 platforms, which were made up of a mixture of large branches, moss covered branches, and platforms created by a split-top tree. The total area surveyed by Hamer Environmental is shaded in white in Figure 2. A detailed description of the trees with potential nest platforms identified is found in Table 1. In total, 52 of the 53 trees (98%) containing potential nesting platforms were located on private or tribal-owned lands, while only 1 tree (2%) was located on state-owned lands. No trees less than 32 inches DBH containing potential nesting platforms were found on state-owned lands.

The exact location of these trees is shown in Figure 2. Thirty-five of the fifty-three platform trees (66%) were located within the yellow Environmental Survey Area, while the remaining eighteen platform trees (34%) were located outside of the Environmental Survey Area but in the immediate vicinity. Within the Environmental Survey Area, 10 platform trees containing a total of 45 potential nesting platforms are located within the red construction right-of-way and TEWA's (project footprint), while another 25 platform trees containing 129 potential nesting platforms is found outside of the project footprint but within the Environmental Survey Area.

The overall habitat quality seems to be marginal throughout the Environmental Survey Area and surrounding habitat. The coniferous trees containing potential nesting platforms are clustered in 2 main areas, one area is in the northern portion of the Environmental Survey Area along Highway 542 (8 acres) and the other area is located along the northern edge of the North Fork Nooksack River (3 acres). These acreage estimates were based on polygons created by Hamer Environmental in GIS. Platform trees located within the habitat area found along Highway 542 are clustered in small groups of 2 – 5 trees, surrounded by various species of deciduous trees. These areas can easily be seen in a photograph taken recently during routine pipeline aerial surveillance (Figure 3). These stands of habitat are separated by more than 300ft. The remaining lands found within the Environmental Survey Area are mostly comprised of deciduous trees with a small component of younger coniferous trees.

According to the Washington State Forest Practice Rules, suitable Marbled Murrelet habitat must be at least 7 acres in size, which would eliminate the area of platform trees found along the North Fork Nooksack River. The suitable habitat located in the northern portion of the Environmental Survey Area found along highway 542 is 8 acres in size and contains 27 habitat trees and 128 potential nesting platforms (average of 16 platforms per acre), which meets the minimum standards and definition of suitable Marbled Murrelet habitat as defined by the Washington State Forest Practices Rules of 2 platforms per acre within a Marbled Murrelet detection area and 7 platforms per acre outside of a detection area.

Please contact Hamer Environmental if you have any questions about this assessment at (360) 899-5156 and matt@hamerenvironmental.com.

Sincerely,

Matt Reed

Matt Reed

Figure 1: Environmental Survey Area and Project Footprint.

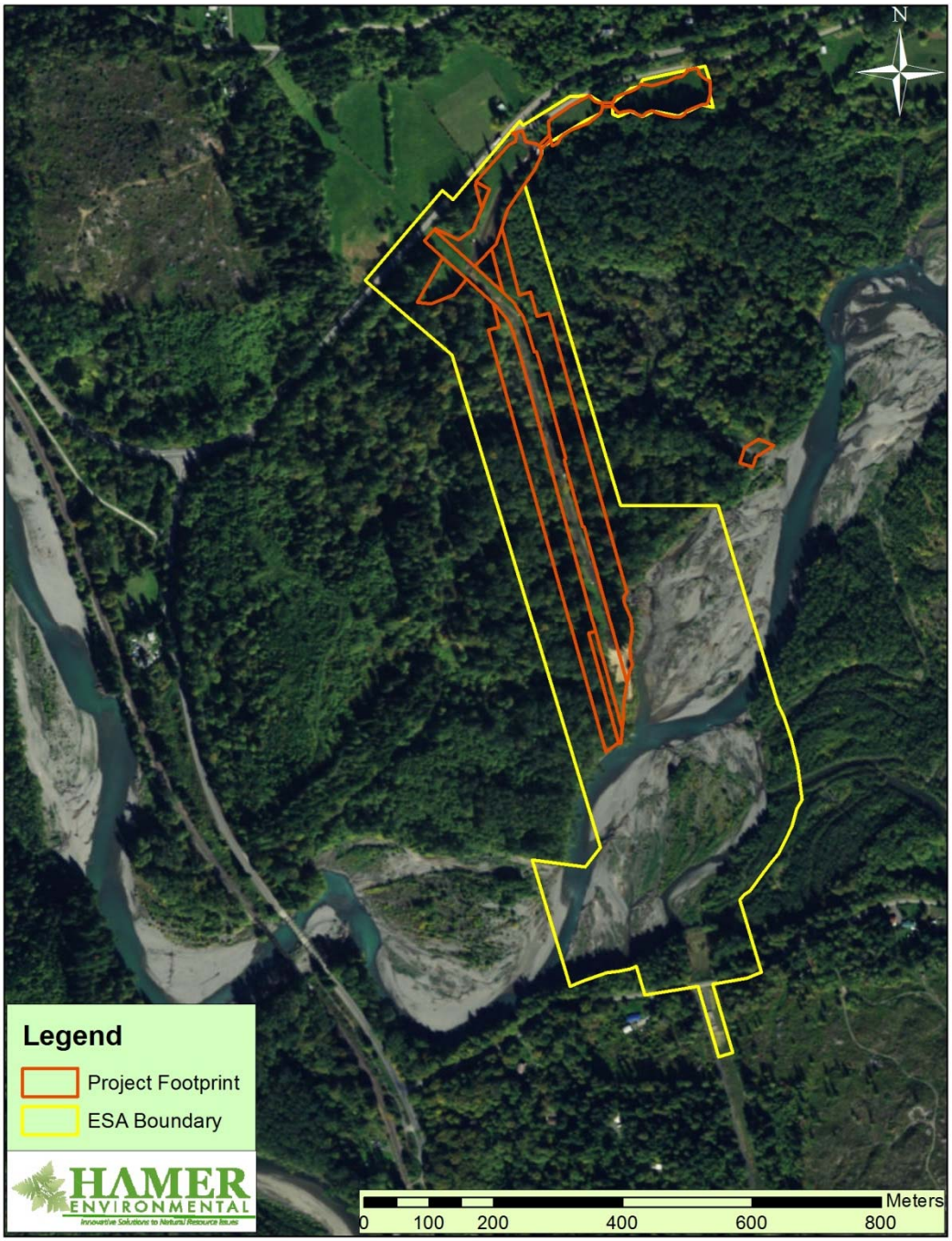

Figure 2: Marbled Murrelet Habitat Trees found within the immediate vicinity of the North Fork Pipeline Project (Hamer Environmental 2017).

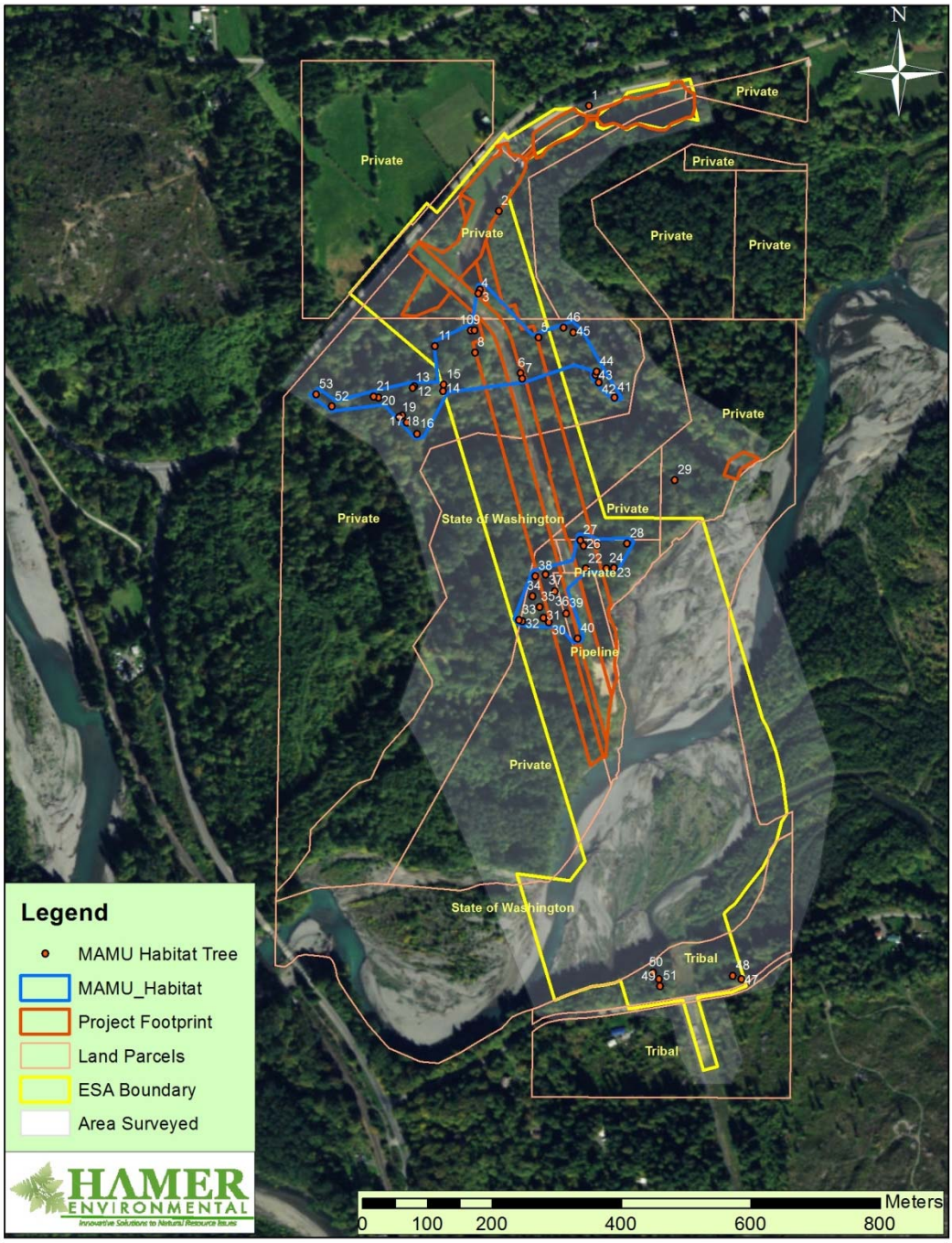

Figure 3: Aerial photograph of Environmental Survey Area taken by Williams in February, 2017.

Table 1: Information collected on Marbled Murrelet Habitat Trees (Hamer Environmental 2017). Definitions of tree species and platform types can be found below.

Tree Number	Species	DBH	Total Platforms	Platform 1	Platform 1 Type	Platform 2	Platform 2 Type
1	DF	38	2	2	LB	0	
2	DF	58	14	12	LB	2	MB
3	SS	51	2	1	LB	1	MB
4	SS	53	5	5	LB	0	
5	SS	66	6	4	LB	2	MB
6	WRC	68	1	1	MB	0	
7	WRC	63	5	4	LB	1	MB
8	SS	71	5	1	LB	4	MB
9	SS	41	2	1	LB	1	MB
10	SS	52	6	4	LB	2	MB
11	SS	38	14	13	MB	1	LB
12	SS	65	2	1	MB	1	ST
13	SS	50	4	4	MB	0	
14	SS	51	4	3	MB	1	LB
15	SS	64	3	2	MB	1	ST
16	SS	54	1	1	LB	0	
17	WRC	60	1	1	ST	0	
18	SS	49	6	6	MB	0	
19	SS	45	9	8	MB	1	LB
20	SS	61	16	14	MB	2	LB
21	SS	40	4	4	MB	0	
22	SS	43	1	1	ST	0	
23	SS	47	4	3	MB	1	LB
24	SS	69	7	5	MB	2	LB
25	WRC	60	2	2	MB	0	
26	WRC	49	1	1	MB	0	
27	WRC	54	2	2	MB	0	
28	WRC	50	6	2	LB	4	ST
29	SS	51	4	3	MB	1	LB
30	WRC	53	1	1	MB	0	
31	WRC	62	14	14	MB	0	
32	WRC	45	3	3	MB	0	
33	WRC	36	6	6	MB	0	
34	WRC	53	7	7	MB	0	
35	SS	49	18	18	MB	0	
36	SS	46	8	8	MB	0	
37	SS	48	17	17	MB	0	
38	WRC	36	5	5	MB	0	
39	SS	47	3	3	MB	0	
40	WRC	56	2	2	MB	0	
41	SS	32	2	2	MB	0	

Tree Number	Species	DBH	Total Platforms	Platform 1	Platform 1 Type	Platform 2	Platform 2 Type
42	WRC	87	6	6	MB	0	
43	WRC	71	5	5	MB	0	
44	WRC	58	3	2	ST	1	LB
45	WRC	60	2	2	MB	0	
46	SS	53	3	3	MB	0	
47	SS	56	1	1	ST	0	
48	WRC	58	3	3	MB	0	
49	WRC	60	8	8	MB	0	
50	WRC	58	5	5	MB	0	
51	WRC	59	12	12	MB	0	
52	SS	55	5	5	MB	0	
53	SS	50	10	10	MB	0	

WRC = Western Red Cedar, DF = Douglas Fir, SS = Sitka Spruce
LB = Large Branch, MB = Mossy Branch, ST = Split Top

ATTACHMENT E

OREGON SPOTTED FROG HABITAT ANALYSIS

TECHNICAL MEMORANDUM

Date:	February 8, 2017
To:	Dan Duce, Edge Environmental
From:	Ryan Kahlo, PWS
Project Number:	160713
Project Name:	Northwest Pipeline, LLC, North Fork Nooksack Line Lowering Project

Subject: Oregon Spotted Frog Habitat Analysis

Background

The north bank of the North Fork of the Nooksack River (North Fork Nooksack) has been subject to recent riverbank erosion near an existing, active underground 30-inch natural gas pipeline owned and operated by Northwest Pipeline LLC (Northwest), a Williams company, in Whatcom County. Continued riverbank erosion threatens to expose and potentially damage the buried pipeline. Northwest is seeking to replace and lower the 30-inch pipeline in order to minimize the risk of future pipeline exposure or damage. The pipeline lowering project will require temporary impacts to wetland areas, and Oregon spotted frogs have been documented within two miles of the project area (Washington Department of Fish and Wildlife [WDFW] online Priority Habitat and Species Data, 2/7/2016).

As part of the federal permitting process, Northwest must comply with Section 7 of the Endangered Species Act, which requires consultation with the National Marine Fisheries Service and/or US Fish and Wildlife Service on potential impacts to federally listed species. Oregon spotted frogs (*Raina pretiosa*) are among the species listed as threatened or endangered that may occur in the project area. This memorandum applies the *Screening Model for Determining the Likelihood of Site Occupancy by Oregon Spotted Frogs (Raina pretiosa) in Washington State* (WDFW, March 2004) (Screening Model) to wetland areas within the project area.

The Screening Model includes five Tier 1 criteria that must all be satisfied for an area to be considered potential Oregon spotted frog habitat, plus a sixth criterion that may be used if the wetland size criterion is the only one of the five that is not satisfied. The Tier 1 criteria include:

750 Sixth Street South | Kirkland, WA 98033
p 425.822.5242 | f 425.827.8136 | watershedco.com

Soils: Soils underlying wetlands should consist of loams (silt, clay, fine sandy, gravelly, cobbly, and stony), mucks (e.g., Semiahmoo, Mukilteo), loamy sands, or other poorly drained fibrisols, mesisols, organic cryosols, gleysols, and humisols.

Elevation: Range-wide potentially habitable elevations range from sea level (above the influence of seawater) to 1,962 m (6,615 ft) above sea level. In Washington, Oregon spotted frogs have been found at habitable elevations ranging between 43 – 640 m (141 – 2,099 ft). Adding ± 25% buffer produces a potentially suitable elevation estimate of sea level, above tidally influenced brackish waters – 800 m (2,624 ft).

NWI classification (Cowardin): Palustrine emergent habitat was the only type present at every occupied site for which National Wetland Inventory (NWI) data were available. A wetland containing palustrine emergent habitat, alone or in combination with ≥1 additional palustrine, lacustrine, or riverine habitat type, should be considered potential Oregon spotted frog habitat.

Wetland size: Minimum known wetland size at an occupied and reproductively active site in Washington State, determined by aerial extent of NWI vegetation, was 4.8 ha (11.9 ac). Buffering this value by 25%, any wetland ≥ 3.6 ha (8.9 ac) should be considered potentially habitable.

National Land Cover Database (NLCD) Landscape composition: Between 0-7.8% of all area within 1.6 km (1 mi) of occupied wetland sites contained developed classes of NLCD. Buffering by 25% produced an upper estimate of ≤9.8% of the area within 1.6 km of a candidate wetland perimeter that may be developed for residential commercial, industrial, and/or transportation purposes.

Connectivity adjustment to size: Wetlands that satisfy all other criteria stated in Tier 1 above, but which are <3.6 ha in size, should be considered suitable if ALL of the following conditions exist:

A) Located <1km$^{(2)}$ (0.63 mi) from, and connected by surface water during intermittent or more-frequent flooding to, an adjacent wetland
B) The combined size of both wetlands is ≥3.6 ha
C) At least one of the wetlands contains palustrine emergent habitat.

If all of the Tier 1 criteria are satisfied, additional Tier 2 criteria related to breeding habitat, summer season habitat, and winter habitat must all be satisfied for an area to be considered suitable Oregon spotted frog habitat. Full descriptions of all Tier 2 habitat will not be enumerated here. Please see the Screening Model for complete descriptions.

Tier 1 Analysis

The project area includes a total of 10 wetland units. See Table 1 for relevant characteristics of individual wetlands in the project area. Table 2 describes satisfaction of specific Tier 1 criteria for each wetland.

Table 1: Wetlands Characteristics

Wetland	HGM Type	Cowardin Vegetation	Size (acres)	Surface Water Connections to Other Wetlands
A	Depressional	Palustrine Emergent	0.36	Connected to Wetland G via stream
B	Depressional	Palustrine Emergent	0.01	No surface water connections to other wetlands
C	Slope-Depressional Slope	Palustrine Emergent, Palustrine scrub-shrub, Palustrine Forested	0.62	Connected to Wetland G via stream
D	Slope	Palustrine Emergent	0.09	No surface water connections to other wetlands
F	Slope-Riverine	Palustrine Forested	0.09	Connected to Wetland G via stream
G	Depressional -Slope-Riverine	Palustrine Emergent, Palustrine scrub-shrub, Palustrine Forested	56.24[1]	Connected to Wetlands A, C, and F via streams.
H	Depressional	Palustrine Forested	0.06	No surface water connections to other wetlands
I	Depressional	Palustrine Emergent	0.37	No surface water connections to other wetlands
J	Depressional	Palustrine Forested	0.20	No surface water connections to other wetlands
K	Slope	Palustrine Emergent	0.41	No surface water connections to other wetlands

[1]Acreage outside of study area is estimated based on public resources and aerial imagery.

Table 2: Satisfaction of Tier 1 Criteria

Wetland	Soils	Elevation	Cowardin	Size	Landscape Composition	Connectivity Adjustment	**Tier I Satisfied?**	Notes
A	Yes	Yes	Yes	No	Yes	Yes	**Yes**	Surface water connection to Wetland G
B	Yes	Yes	Yes	No	Yes	No	**No**	No surface water connections to other wetlands
C	Yes	Yes	Yes	No	Yes	Yes	**Yes**	Surface water connection to Wetland G
D	Yes	Yes	Yes	No	Yes	No	**No**	No surface water connections to other wetlands
F	Yes	Yes	No	No	Yes	N/A	**No**	PFO only; does not satisfy all other Tier 1 criteria per connectivity requirements
G	Yes	Yes	Yes	Yes	Yes	N/A	**Yes**	Satisfies all Tier 1 criteria
H	Yes	Yes	No	No	Yes	N/A	**No**	PFO only; does not satisfy all other Tier 1 criteria per connectivity requirements; no surface water connections to other wetlands
I	Yes	Yes	Yes	No	Yes	No	**No**	No surface water connections to other
J	Yes	Yes	No	No	Yes	N/A	**No**	PFO only; does not satisfy all other Tier 1 criteria per connectivity requirements; no surface water connections to other wetlands
K	Yes	Yes	Yes	No	Yes	No	**No**	No surface water connections to other wetlands

As demonstrated in Table 2, only wetlands A, C, and G satisfy all necessary Tier 1 criteria. These wetlands are discussed in more detail and regarding satisfaction of Tier 2 criteria below.

Tier 2 Analysis

For those wetlands that satisfy all Tier 1 criteria, they must additionally satisfy all the criteria for each of the breeding, summer, and winter habitat conditions to be further considered Oregon spotted frog habitat.

Summary of Characteristics of Wetlands that Meet All Tier 1 Criteria

Wetland A

Wetland A is a depressional wetland located mostly on the maintained corridor. This wetland supports an emergent Cowardin vegetation community dominated by reed canarygrass with small-fruited bulrush (*Scirpus microcarpus*) and soft rush (*Juncus effusus*) interspersed. The indicator soil is a dark brown (10YR 3/2) silt loam with redoximorphic features present. The soil satisfies the criteria for the hydric soil indicator Redox Dark Surface (F6). Hydrology is provided by a seasonally high groundwater table and precipitation. The hydrologic regime includes saturated-only and seasonally flooded areas, which are typically less than six inches deep.

Wetland C

Wetland C is a depressional wetland located within and east of the maintained corridor. This wetland supports forested, scrub-shrub, and emergent Cowardin vegetation community dominated by red alder (*Alnus rubra*), salmonberry, mannagrass (*Glyceria elata*), youth-on-age, and reed canarygrass. The indicator soil is a dark brown (10YR 3/2) silt loam with redoximorphic features present. The soil satisfies the criteria for the hydric soil indicator Redox Dark Surface (F6). Hydrology is provided by a seasonally high groundwater table and precipitation. The hydrologic regime includes saturated-only and seasonally flooded areas, which are typically less than six inches deep.

Wetland G

Wetland G is the largest wetland in the study area and is associated with Jim Creek and a side channel of the North Fork Nooksack. While all the wetlands share similar vegetation, soil, and hydrology characteristics, Wetland G differs in that it is highly influenced by the confluence of several streams, drainages, and the preponderance of beaver dams. The areas that are not seasonally or permanently flooded tend to have upland hummocks of Douglas-fir (*Pseudotsuga*

menziesii) and bigleaf maple trees (*Acer macrophyllum*) with snowberry (*Symphoricarpos albus*) and sword fern (*Polystichum munitum*) in the understory.

Wetland G supports forested and emergent Cowardin vegetation communities. Emergent communities comprise the entire maintained corridor, with forested areas comprising the areas outside the corridor. Prevalent vegetation includes red alder, black cottonwood, black twinberry, salmonberry, lady fern, small-fruited bulrush, and reed canarygrass. Reed canarygrass is prevalent in areas outside of the maintained corridor and forms extensive monocultures within the corridor. Indicator soils in Wetland G generally satisfy the criteria for the hydric soil indicators Depleted Matrix (F3) and Redox Dark Surface (F6). Hydrology for Wetland G is provided by a high groundwater table, overbank flooding from numerous streams and the North Fork Nooksack, and precipitation. The hydrologic regimes include permanently flooded, seasonally flooded, and saturated only. Flooding ranges from less than six inches within much of the maintained corridor to several feet in forested areas outside the corridor.

Tier 2 Criteria- Breeding Habitat Low-gradient shallows

Depth: Wetlands A, C, and G all likely contain low-gradient shallows (5 – 30 cm) of appropriate depth during the springtime, such that this criteria is satisfied. Extensive portions of Wetland G appear to support much deeper inundation, but shallows of appropriate depth are present in the palustrine emergent areas within the maintained corridor. *This criterion is satisfied for all wetlands.*

Vegetation Composition: The required vegetation within the low-gradient shallows must be dominated (>50% existing cover) by native emergent vegetation. Sub-dominant vegetation, including reed canarygrass (*Phalaris arundinacea*) may be present or may be dominant if livestock grazing reduces the canopy. Those portions of Wetlands A, C, and G, in which low-gradient shallows are present, are dominated by ungrazed reed canarygrass. *Carex* species are sub-dominant, providing substantially less than 50% of the existing vegetative cover. *This criterion is not satisfied for any of the wetlands.*

Vegetative Cover: Low-gradient shallows must have >10% plant coverage on bottom substrate, primarily in submergent and emergent growth forms. Wetlands A, C, and G each provide more than 10% cover of emergent vegetation. *This criterion is satisfied for all of the wetlands.*

Canopy Closure: Low-gradient shallows must have low surface and above-water canopy closure in the form of woody-stemmed shrubs and trees, such that palustrine forested and ungrazed reed canarygrass-dominated habitats are not suitable. Emergent portions of Wetlands A, C, and G (i.e. within the maintained

corridor) are dominated by ungrazed reed canarygrass. Portions of these wetlands outside of the maintained corridor do not support low-gradient shallows and/or are palustrine forested and scrub-shrub. *This criterion is not satisfied for any of the wetlands.*

Hydrologic connectivity: Low-gradient shallows must remain hydrologically connected to summer season habitat until post-hatching (generally April 31). Summer season habitat is available in Wetland G, and the low-gradient shallows likely remain hydrologically connected until post-hatching. Since Wetlands A and C are hydrologically connected to Wetland G, *this criterion is satisfied for all of the wetlands.*

Conclusion

Wetlands A, C, and G satisfy all Tier 1 criteria. No other wetlands in the project area satisfy all Tier 1 criteria. For Tier 2 breeding habitat, the low-gradient shallows present in Wetlands A, C, and G are primarily limited to the maintained corridor. As described above, these areas are dominated by ungrazed reed canarygrass primarily present as monocultures. Therefore, the vegetation composition and vegetative cover criteria are not satisfied. Since all five of the above criteria must be satisfied for an area to qualify as suitable breeding habitat, such habitat is not present in the project area. Further analysis of summer and winter habitat is not warranted in the absence of suitable breeding habitat. Based on a lack of breeding habitat, suitable Oregon spotted frog habitat is not present in the project area.

APPENDIX D

TEMPORARY EXTRA WORKSPACES

Temporary Extra Work Areas (TEWAs) Necessary for Construction of the Project

Name	Acres	Dimensions	Purpose	Land Use	Vegetation
TEWA-01	1.67	500' x 200' (Irregular)	Equipment staging, pipe/material storage, timber/slash storage, parking, and spoil storage	Developed	Urban and Mixed Environs; Agriculture and Pasture
TEWA-02	0.02	50' x 20'	Temporary access between TEWAs 01 and 03	Developed	Urban and Mixed Environs; Agriculture and Pasture
TEWA-03	0.73	300' x 120' (Irregular)	Equipment staging, pipe/material storage, timber/slash storage, parking, and spoil storage	Developed	Urban and Mixed Environs; Agriculture and Pasture
TEWA-04	0.03	70' x 20'	Temporary access between TEWAs 03 and 05	Developed	Urban and Mixed Environs; Agriculture and Pasture
				Forest-Woodland	Westside Lowlands Conifer-Hardwood Forest
				Riparian and Wetlands	Herbaceous Wetland
				Open Water	Open Water – Lakes, Rivers, Streams
TEWA-05	2.56	680' x 200' (Irregular)	Equipment staging, pipe/material storage, timber/slash storage, parking, and spoil storage	Developed	Urban and Mixed Environs; Agriculture and Pasture
				Forest-Woodland	Westside Lowlands Conifer-Hardwood Forest
				Riparian and Wetlands	Herbaceous Wetland
TEWA-06	0.10	75' x 75' (Irregular)	Equipment staging, pipe/material storage, timber/slash storage, parking, and spoil storage	Developed	Urban and Mixed Environs; Agriculture and Pasture
				Forest-Woodland	Westside Lowlands Conifer-Hardwood Forest
TEWA-07	0.66	235' x 145' (Irregular)	Equipment staging, pipe/material storage, timber/slash storage, parking, and spoil storage	Developed	Urban and Mixed Environs; Agriculture and Pasture
				Forest-Woodland	Westside Lowlands Conifer-Hardwood Forest
				Riparian and Wetlands	Herbaceous Wetland
TEWA-08	5.59	2340' x 130' (Irregular)	Construction access, dewatering activities, slash storage, spoil storage	Developed	Urban and Mixed Environs; Agriculture and Pasture
				Forest-Woodland	Westside Lowlands Conifer-Hardwood Forest
				Riparian and Wetlands	Westside Riparian-wetlands
				Open Water	Open Water – Lakes, Rivers, Streams
				Developed	Urban and Mixed Environs; Agriculture and Pasture

Name	Acres	Dimensions	Purpose	Land Use	Vegetation
				Riparian and Wetlands	Herbaceous Wetlands
TEWA-09	5.51	2210' x 125' (Irregular)	Construction access, staging, dewatering activities and discharge	Riparian and Wetlands	Westside Riparian-wetlands
				Forest-Woodland	Westside Lowlands Conifer-Hardwood Forest
				Riparian and Wetlands	Herbaceous Wetlands
				Open Water	Open Water – Lakes, Rivers, Streams
				Developed	Urban and Mixed Environs; Agriculture and Pasture
TEWA-10	0.47	570' x 75' (Irregular)	Construction access, staging, dewatering activities, and tie-in.	Forest-Woodland	Westside Lowlands Conifer-Hardwood Forest
				Open Water	Open Water – Lakes, Rivers, Streams
				Developed	Urban and Mixed Environs; Agriculture and Pasture
TEWA-11	0.26	150' x 75' (Irregular)	Temporary access and Jim Creek contingency flow control.	Open Water	Open Water – Lakes, Rivers, Streams
				Developed	Urban and Mixed Environs; Agriculture and Pasture
TEWA-12	0.29	131' x 86' (Irregular)	Vehicle parking and staging activities to purge/fill the abandoned 26-inch pipeline with grout at MLV-17-7	Developed, previously disturbed	Urban and Mixed Environs; Agriculture and Pasture
TEWA-13	0.15	356' x 20' (Irregular)	Vehicle parking and staging activities to purge/fill the abandoned 26-inch pipeline with grout at MLV-17-7	Developed, previously disturbed	Urban and Mixed Environs; Agriculture and Pasture
TEWA-14	0.14	340' x 40' (Irregular)	Vehicle parking and staging activities to purge/fill the abandoned 26-inch pipeline with nitrogen at MLV-17-8	Developed, previously disturbed	Urban and Mixed Environs; Agriculture and Pasture